Oct. 14, 1924. 1,511,982

J. N. SCHILLING

RUBBISH CAN

Filed June 20, 1923

Fig 1.

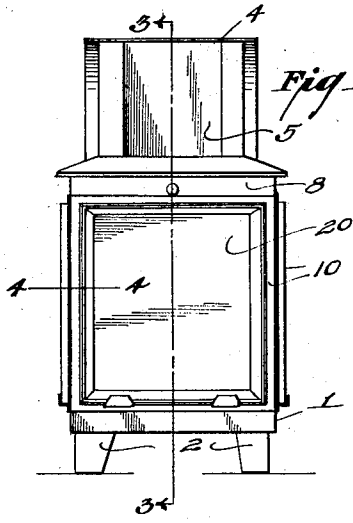

Fig 2.

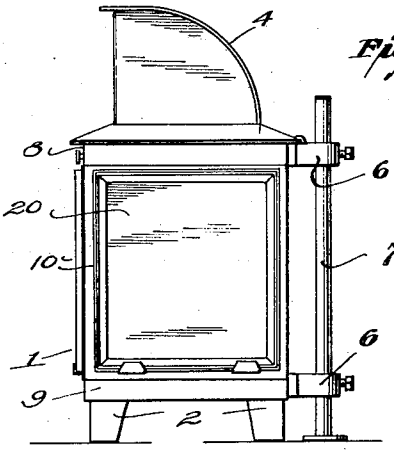

Fig 3.

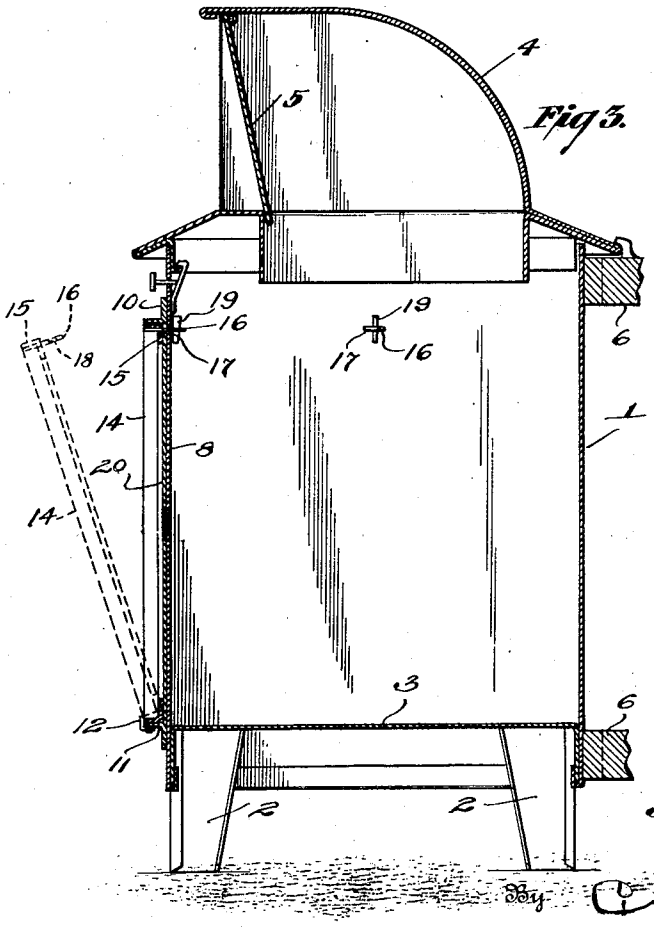

Fig 4.

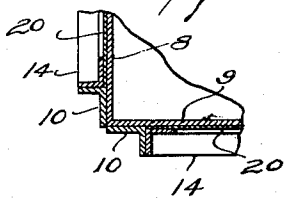

Fig 5.

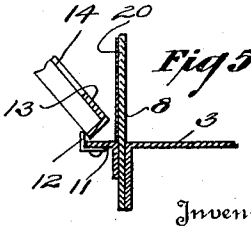

Inventor

John N. Schilling

By

Attorney

Patented Oct. 14, 1924. 1,511,982

UNITED STATES PATENT OFFICE.

JOHN N. SCHILLING, OF COLUMBUS, OHIO.

RUBBISH CAN.

Application filed June 20, 1923. Serial No. 646,515.

To all whom it may concern:

Be it known that I, JOHN N. SCHILLING, a citizen of the United States, residing at Columbus, in the county of Franklin and State of Ohio, have invented certain new and useful Improvements in Rubbish Cans, of which the following is a specification.

The present invention is directed to improvements in rubbish cans.

The primary object of the invention is to provide a can of this nature with novel means whereby advertising of different nature can be interchangeably attached to the can, the construction being such that the advertising card will be held firmly in place but at the same time can be readily removed to change the advertising matter.

A further object of the invention is to provide a can of this character wherein the means for holding the advertising matter can not be actuated without having access to the interior of the can.

With these and other objects in view, as will appear as the description proceeds, the invention consists in the novel features of construction, combinations of elements and arrangements of parts, and hereinafter to be fully described and pointed out in the appended claims.

In the accompanying drawing:

Figure 1 is a front view of the device,

Figure 2 is a side elevation thereof,

Figure 3 is a sectional view on the line 3—3 of Figure 1,

Figure 4 is a sectional view on line 4—4 of Figure 1, and

Figure 5 is a detail view through the can showing the advertising card holder in its inoperative position.

Referring to the drawing 1 indicates the can which is preferably rectangular in cross section and has supporting legs 2 fixed to its bottom 3, there being a hood 4 removably associated with its upper end, said hood having a flap 5 for preventing the egress of material from the can but readily permitting trash to be placed therein.

The rear wall of the can is provided with a pair of brackets 6 which are adapted to engage the anchor post 7 so as to hold the can in its proper position.

To the front wall 8 and the side walls 9 of the can are secured angle iron frames 10, and to the lower bars 11 of each frame are suitably secured brackets 12 which are adapted to engage the lower bars 13 of the movable frames 14, said frames being rectangular in shape, as are the frames 10. The frames 14 have their upper bars 15 provided with latches 16 which are adapted to pass through suitable openings 17 formed in the respective walls 8 and 9, and are provided with slots 18 for the reception of the wedges 19, said wedges serving, when engaged in the slots 18 to prevent the latches 16 from being accidentally disengaged with their respective slots, thereby holding the frames 14 tightly engaged with the respective sides of the can whereby the advertising cards 20 will be held firmly in place upon the respective sides of the can.

It will be obvious that upon removing the wedges 19 that the frames 14 can be swung on the lower bars 11 until they assume the position as shown in dotted lines in Figure 3, whereupon the advertising cards can be interchanged when desired.

What is claimed is:

1. A rubbish can including front and side walls, frames fixed to said walls, supplemental frames detachably connected with the fixed frames and having latches carried thereby, said latches being extended through the respective walls, and means located interiorly of the can for engaging the latches to hold the supplemental frames confined within the fixed frames, as and for the purpose set forth.

2. A rubbish can including a front and side walls, frames fixed to said walls, the lower bars of said frames having clips carried thereby, supplemental frames having their lower bars engaged with the lower bars of the fixed frame and with said clips, the walls of said can being provided with slots, latches carried by the upper bars of the supplemental frames for engagement in said slots, a securing device located upon the interior of the can and detachably engaged with said latches, as and for the purpose set forth.

In testimony whereof I affix my signature.

JOHN N. SCHILLING.