Dec. 19, 1944. F. G. CUNNINGHAM 2,365,396

TAPER GRINDING OF ARTIFICIAL FILAMENTS

Filed Sept. 2, 1943

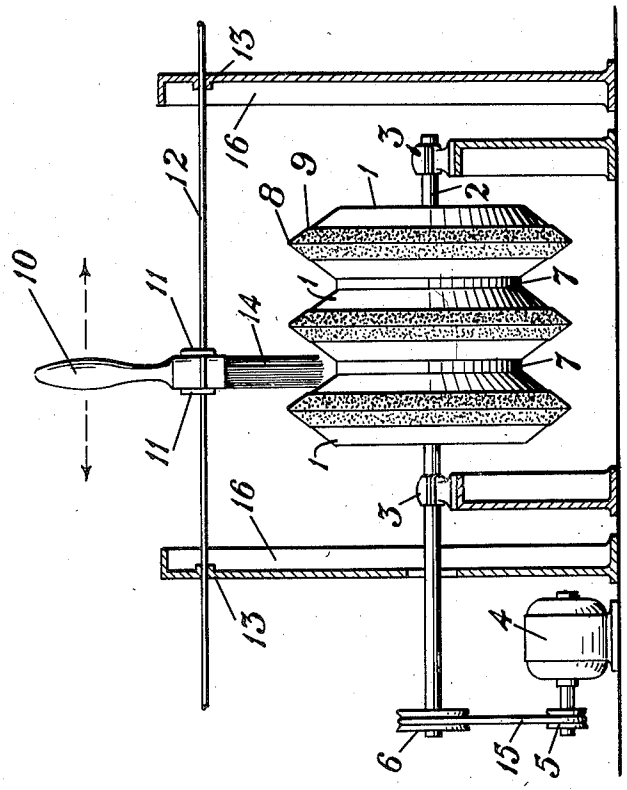

Fig. 3

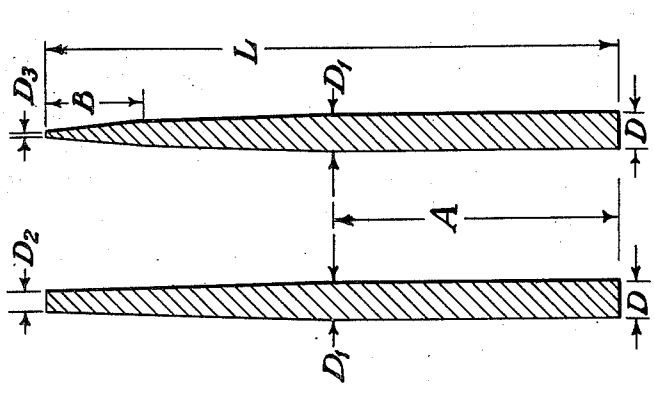

Fig. 1 Fig. 2

Francis Graham Cunningham INVENTOR.

BY J. M. Castle Jr.
ATTORNEY

Patented Dec. 19, 1944 2,365,396

UNITED STATES PATENT OFFICE

2,365,396

TAPER GRINDING OF ARTIFICIAL FILAMENTS

Francis Graham Cunningham, Verona, N. J., assignor to E. I. du Pont de Nemours & Company, Wilmington, Del., a corporation of Delaware

Application September 2, 1943, Serial No. 500,922

11 Claims. (Cl. 51—92)

This invention relates to the taper grinding of artificial filaments and, more particularly, to the taper grinding of brush bristles comprising synthetic linear polyamide filaments.

Polyamide filaments make excellent brush bristles, especially where the strength and resilience of the filaments has been improved by macromolecular orientation through cold drawing. For use in brushes adapted to hold and distribute liquid, such as paint brushes, it has been found necessary to use filaments which are tapered. A method of making these tapered filaments is disclosed in United States Patent No. 2,292,905. While brushes thus formed are ideal for certain purposes, and in most uses are superior in toughness, resilience, and abrasion resistance to the best animal and vegetable bristles, certain difficulties attend their use for painting. For instance, these synthetic bristles may require comparatively long periods of breaking in before they become capable of distributing paint uniformly and without brush marks.

Investigation has shown that these difficulties are due to insufficient taper, particularly at the working end of the bristle. Attempts to increase the degree of taper of the filament by any method of the prior art to eliminate the above mentioned difficulties, have resulted in the breaking of the filament or, at best, faulty configuration. Oriented polyamide filaments of configuration and taper suitable for liquid distributing brushes of the best quality have not been produced by any combination of spinning and drawing methods now known.

An object of the present invention is to provide a synthetic bristle suitable for use in liquid distributing brushes. A further object is the production of oriented synthetic linear polyamide bristles, and brushes of said bristles, of improved liquid distributing characteristics. A still further object is to provide a method and apparatus for forming oriented synthetic linear polyamide filaments having the above outlined characteristics. Other objects will be apparent from the description of the invention given hereinafter.

The above objects are accomplished according to the present invention by grinding the working end of tapered oriented synthetic linear polyamide filaments to increase the taper thereof, and by the use of such filaments in brushes adapted to distribute liquid, such as paint. The invention further comprises an apparatus whereby the bristles of brushes may be taper ground to improve the liquid distributing characteristics thereof.

In order to effect the desired tapering, the tapered oriented synthetic linear polyamide filaments used as the starting material may be held, prior to their assembly into a brush, either individually or as a thin group, approximately tangentially against a flat moving abrasive surface. Preferably, however, the taper grinding operation is performed on a completely assembled brush by means of the apparatus of this invention.

For a more detailed explanation of the invention reference is made to the accompanying drawing wherein:

Fig. 1 is a section through a tapered synthetic linear polyamide filament of the type used for brush bristles heretofore and suitable for use as a starting material in the process of the present invention;

Fig. 2 is a section through the filament shown in Fig. 1, after having been taper ground in accordance with this invention; and

Fig. 3 is a diagrammatic elevation of an apparatus for taper grinding according to a preferred embodiment of this invention.

Referring to Fig. 1, there is shown in section a synthetic filament obtainable by the process disclosed in United States Patent 2,292,905. For the liquid distributing brushes of the type herein specifically considered, such as paint brushes, a bristle length of 3" to 6", L in Figs. 1 and 2, represents about the extreme range of the filament, with the butt diameter D equal to 0.005" to 0.015". The portion A of the length of the bristle will equal one-third to two-thirds of L and is preferably of substantially constant diameter throughout, the diameter D_1 never exceeding the diameter D although the portion A of the bristle may be somewhat tapered so that D_1 would be less than D. D_2 is the diameter at the working end of the heretofore available tapered bristles, usually from 1/1.3 to ½ of D.

In Fig. 2 is shown in section a synthetic filament which has been taper ground to the configuration of a bristle according to the present invention. This bristle is the same as that shown in Fig. 1, except for the portion B which has been taper ground. B equals one-tenth to one-third of L, and D_3, the diameter at the working end of the bristle, is less than 0.0025".

It has been discovered that a paint brush in which at least 90% of the full length bristles have the configuration defined above and shown in Fig. 2, is markedly superior to one in which

the bristles have the configuration indicated in Fig. 1, particularly in that it requires substantially no breaking in before becoming capable of distributing paint uniformly and without brush marks.

It will be understood that the filament sections shown in Figs. 1 and 2 are exaggerated transversely for purposes of illustration. Further, the cross-section through a bristle according to the present invention, need not be circular but may be elliptical or even quadrangular. Also, the bristles of this invention may be made by taper grinding constant diameter filament in which case the diameter of the filament will, of course, be constant except for the portion B of its length.

The present invention comprises an apparatus specifically designed to taper grind synthetic filaments to the configuration discussed above and one embodiment of that apparatus is illustrated in Fig. 3. A shaft 2 is rotatably mounted in horizontal position in the journal bearings 3—3. This shaft 2 is driven by the electric motor 4, or equivalent power source, connected to the shaft 2 through the pulley 5 of the motor 4, the drive belt 15, and the pulley 6 carried by the shaft 2.

Fixedly mounted on the shaft 2 to rotate therewith are three identical crown discs, designated by the reference numeral 1, separated from each other by the smaller discs 7. The sloping peripheral surfaces of each crown disc 1 meet at an acute angle at the annular apex 8 of each and these slopes are coated with an abrasive material 9, such as sandpaper, part way down from the apex 8.

A pair of shafts 12, only one of which shows in Fig. 3, are slidably mounted in brackets 13 carried by standards 16. These shafts 12 are parallel to shaft 2 and spaced slightly to accommodate a clamp 11 which is fixedly mounted on the shafts 12. The clamp 11 is adapted to hold a brush 10 securely with the longitudinal axis of the brush vertical and in a plane parallel to and passing through shaft 2, the brush bristles 14 extending toward shaft 2 and beyond the coating of abrasive material 9 on the crown discs 1.

The apparatus is operated by rotating the crown discs 1 by means of the motor 4 and moving the brush 10 by means of the shafts 12 which slide in the brackets 13. The crown discs 1 should be rotated so that they have a peripheral speed of 1,000 feet to 10,000 feet per minute, preferably not less than 6,000 feet per minute, and the brush should be moved transversely at a speed of 3" to 9" per minute, preferably at about 6" per minute.

As the bristles 14 of the brush 10 come into contact with the slopes of the crown discs 1, they are picked up and carried slightly upwardly and in the direction of rotation of the shaft 2; the resulting contact of the bristles 14 with the abrasive coating 9 on the discs 1 causes the sides of the lower portions of the bristles 14 to be abraded. When the bristles are picked up by one of the slopes of the crown discs 1, they tend to roll over and over and, as they approach the apex 8, they are suddenly whisked over upon the opposite slope of the crown disc. This action has the effect of opening up the brush so that the bristles in the interior are exposed to the action of the abrasive. Observing the limits of the apex angle of the crown discs, which are highly critical, and the limits of the peripheral speed of the crown discs and the traversing speed of the brush, it has been found that the brush bristles remain substantially in order and do not become tangled in this operation. Such a result is highly important for satisfactory taper grinding of the bristles.

When the brush 10 has been traversed beyond the extent of the crown disc unit, the direction of traverse is reversed and the brush is passed over the unit again in the opposite direction. After the brush has been subjected to this treatment for about 10 minutes, the direction of rotation of the shaft 2 is reversed, or the brush is turned around, and the grinding is continued for another 10 minutes. This procedure results in substantially uniform grinding throughout the brush so that a high proportion of the individual bristles have been given the configuration hereinbefore discussed.

As a further refinement of the grinding the brush may be held approximately tangentially against a rotating abrasive wheel of approximately flat peripheral surface to increase the length of paper of the outside bristles.

Whether a single crown disc is used in the apparatus or a unit of several crown discs, as shown in Fig. 3, is not at all critical although a unit of several of these discs is preferred. But the apex angle of the crown disc is exceedingly important and must be between 60° and 80°. If an angle less than 60° is employed, excessive tangling of the bristles results, while an angle greater than 80° results in the grinding off of the bristle tip.

The size of the crown discs may be varied widely although it is preferred to use discs having a diameter of 6" to 24" and a thickness of 2" to 4". It has been found that wooden crown discs which are 2¾" thick and have a diameter ranging from 6" to 24", with an apex angle of 70°, are particularly satisfactory, especially when the abrasive coated portion of the slope of the disc extends less than 2" down from the apex and, preferably, extends half way down the distance of the slope from the apex.

Assuming brushes in the usual size range of paint brushes are to be taper ground, it is desirable that the abrasive coated portion of each crown disc be less than 2" on a slope and that there extends beyond the abrasive coated portion of each slope a comparatively smooth portion such as polished wood. This preferred design promotes side grinding of the bristles without end grinding. As a practical matter, it has been found that the abrasive coating on the slopes of the crown discs may be varied from one-fourth to three-fourths of the distance down each slope from the apex although usually one-half of the distance down each slope is most satisfactory if the crown discs are less than 4" in thickness.

The abrasive coating on the crown disc may be sandpaper cut to proper size and shape and fastened to the disc by an adhesive. Alternatively, the slopes of the disc may be coated with an adhesive and, while the adhesive is still tacky, there may be blown or pressed thereon abrasive particles of suitable size and sharpness. It is preferred that the abrasive particles be of such size that they will pass a 45-mesh screen and be retained on a 55-mesh screen.

The supporting and traversing means for the brush may be varied widely. A simple and efficient device has been shown in Fig. 3, more or less diagrammatically, but many other equivalent devices will readily occur to those skilled in the art. In the device shown, a plurality of brushes may be supported and ground simultaneously and

this is the preferred method of carrying out the invention. The traverse motion of the brush-holding means may be effected manually or, if desired, by mechanical means capable of giving a non-varying reciprocated motion. The brush should be moved in a line parallel to the axis of rotation of the crown disc and at a constant height.

The brush should be disposed at that height relative to the crown disc, which, in the particular condition obtaining, results in the greatest extent of taper grinding without fusion of the bristles. As the apex of the crown disc is advanced upwardly into the brush toward its ferrule, the force with which the bristles are pressed against the crown disc, increases due to the restricted action of the ferrule, and the heat of friction likewise increases. This heat may become sufficiently great to fuse some of the bristles together, greatly impairing the value of the brush. There is thus an upper limit to the extent that the brush and crown disc may safely overlap with a given apparatus under given conditions of operation. It is important that this upper limit be approached as closely as possible in order that the ground portion (B in Fig. 2) be of greatest length. With an apparatus of the type illustrated in Fig. 3, having the specifications given in Example I below, and operated under the conditions given in that example, the optimum overlap for a 4" brush is 2½". It will be apparent that the optimum overlap in each specific instance will have to be determined by trial but this can be quickly and readily done. In any event, it is preferred that the bristles extend down beyond the abrasive portion of the crown disc.

In order that the taper grinding may be uniform, it is important that the length of traverse of the brush be a multiple of the distance between two successive apexes of the crown disc unit, except that this is not essential when the brush, or group of brushes, being treated passes on each traverse completely beyond the extent of the crown disc unit. The rate of traverse should be sufficiently slow so that the bristles are whisked across the apex of each crown disc by the action of rotation rather than pulled across by the movement of the brush. If the rate of traverse is too fast, the bristles may become tangled. On the other hand, too slow a rate of traverse may cause unduly prolonged contact of the bristles with the abrasive, resulting in fusion of the bristles from frictional heating. Ordinarily, the rate of traverse will fall within the range of 3" to 9" per minute while a rate of traverse of 6" per minute is preferred.

The following examples illustrate specific embodiments of the present invention:

Example I

A paint brush 4" wide and 1" thick is formed of synthetic linear polyamide filaments 4½" long having an average diameter at the butt end (D) of 0.012" (see Fig. 1) and a taper ratio

$$\left(\frac{D_1}{D_2}\right)$$

of about 1.5. The particular polyamide involved is formed from hexamethylene diamine and sebacic acid. The apparatus used is that illustrated in Fig. 3. The abrasive coated crown discs have a major diameter of 11½", a thickness of 2¾", and are separated from each other by discs ⅜" wide. The slopes of the crown discs meet at an angle of 70°. Each slope is partially covered with sandpaper extending 0.8" down from the apex measured along the slope. This sandpaper is composed of abrasive particles of about 50 mesh per inch size. The discs are rotated by an electric motor at a peripheral speed of 6,000 feet per minute. The brush is suspended by the traversing mechanism in a vertical position with the bristles lowermost so that the overlap between the ends of the bristles and the apex at each disc is 2½". The brush is traversed at a speed of 6" per minute for ten minutes after which it is turned around and the process is repeated for another ten minutes. Examination under magnification reveals that most of the bristles have the desired configuration.

This brush is then held approximately tangentially against the peripheral surface of a flat rotating grinding wheel, the point of contact of the wheel with the bristles being well above the tip rather than at the tips of the bristles. Configuration of the inner bristles is unchanged. The outer bristles resemble the desired configuration except that tapered ground portion (B in Fig. 2) is of considerably greater longitudinal extent. This brush handles well, distributes paint evenly, and exhibits a lesser tendency to leave brush marks than brushes made of highest quality hog bristles.

An exactly similar brush, not tapered ground having a bristle configuration similar to that shown in Figure 1, has poor paint distributing qualities and requires a long period of breaking in to eliminate excessive tendencies to leave brush marks. An otherwise exactly similar brush, not taper ground in accordance with this invention is treated with a flat surface grinding wheel. The taper obtained by such treatment does not comply to the desired configuration except in the case of the outermost bristles of the brush. The painting characteristics of this brush are only slightly better than that of the brush which has received no treatment.

Example II

A brush 2" wide and ½" thick is formed from polyhexamethylene adipamide oriented filaments 2" long, having a butt diameter of 0.010" and a taper ratio of 1.7. The brush is treated with the apparatus shown in Fig. 3 in the manner described in Example I, except that the peripheral speed of disc unit is 2,000 feet per minute and the traversing speed is 4" per minute. At the end of 25 minutes the brush is reversed and then ground for another 25 minutes. The resulting bristles have the desired configuration and the painting qualities are excellent.

Example III

A brush 2" wide and ½" thick is formed from untapered oriented polyamide filaments having a diameter about 0.007". The polyamide involved is that formed by the reaction of hexamethylene diamine and sebacic acid modified by the addition of a phenol formaldehyde resin. The brush is ground in an apparatus similar to that shown in Fig. 3, except that the major diameter of the disc is 6". The disc surface speed is 6,000 feet per minute and the rate of traverse of the brush is 6" per minute. After one-half hour the direction of rotation of the disc unit is reversed and the process is continued for another half hour. Examination shows that the bristles are tapered for approximately one-third

their length and that the tip end is tapered according to the desired configuration.

It will be understood that the above examples are merely illustrative and that the invention is broadly applicable to taper grinding synthetic bristles. The preferred bristle filaments are those made from polyamides of the type disclosed in Untied States patents, 2,071,250; 2,071,253; and 2,130,948. These polyamides are prepared from bifunctional polyamide-forming reactants and contain amide groups as an integral part of the main chain of atoms in the polymer. It is not essential that the linking group in the polymer chain consists solely of amide groups; it may also contain other groups such as ester groups. Further, the filaments need not consist wholly of polyamide or modified polyamide polymers. Dyes, pigments, fillers, water-repellents, plasticizers, and other modifiers may be present. Polyamides modified by phenol-aldehyde resins have been found particularly useful. Other synthetic resin bristles, such as those made from cellulose triacetate, for example, may also be treated according to the present invention.

Certain advantages in handling qualities are thought to be gained by the use in a paint brush of bristles of more than one diameter or bristles of more than one length or, preferably, bristles of more than one length and diameter. The bristles of different sizes may be arranged at random or regularly, that is, a brush may have a chisel-like edge, the bristles on the two sides being shorter than those in the center, or the bristles on one side being shorter than those on the ot. :r. It has been found that paint brushes so constructed may be satisfactorily taper ground according to the present invention.

An advantage of this invention and, perhaps, its greatest advantage, is that it provides a practical means of taper grinding paint brush bristles to give a paint brush of improved distribution characteristics. However, another advantage is that the liquid-holding properties of the brush are increased somewhat by the use of bristles taper ground according to the present invention.

As many apparently widely different embodiments of this invention may be made without departing from the spirit and scope thereof, it is to be understood that the invention is not limited to the specific embodiments thereof except as defined in the appended claims.

I claim:

1. An apparatus for taper grinding brushes bristled with artificial filaments, said apparatus comprising a rotatably mounted shaft, means for rotating said shaft, a crown disc axially mounted on said shaft to rotate therewith, said crown disc having an included apex angle of 60°–80°, an abrasive coating extending part way down each slope of said disc from the apex, and means for holding a brush with its longitudinal axis at right angles to said shaft and in a plane parallel to and passing through said shaft, with the brush bristles extending toward said shaft and beyond said abrasive coating on said crown disc, said means being slidable parallel to said shaft.

2. An apparatus for taper grinding brushes bristled with artificial filaments, said apparatus comprising a rotatably mounted shaft, means for rotating said shaft, a crown disc axially mounted on said shaft to rotate therewith, said crown disc having an included apex angle of 60°–80°, an abrasive coating extending from one-fourth to three-fourths of the distance down each slope of said disc from the apex, and means for holding a brush with its longitudinal axis at right angles to said shaft and in a plane parallel to and passing through said shaft, with the brush bristles extending toward said shaft and beyond said abrasive coating on said crown disc, said means being slidable parallel to said shaft.

3. An apparatus for taper grinding brushes bristled with artificial filaments, said apparatus comprising a rotatably mounted shaft, means for rotating said shaft, a crown disc axially mounted on said shaft to rotate therewith, said crown disc being 6" to 24" in diameter and 2" to 4" thick, and having an included apex angle of 60°–80°, an abrasive coating extending from one-fourth to three-fourths of the distance down each slope of said disc from the apex, and means for holding a brush with its longitudinal axis at right angles to said shaft and in a plane parallel to and passing through said shaft, with the brush bristles extending toward said shaft and beyond said abrasive coating on said crown disc, said means being slidable parallel to said shaft.

4. An apparatus for taper grinding brushes bristled with artificial filaments, said apparatus comprising a rotatably mounted, horizontal shaft, means for rotating said shaft, a crown disc axially mounted on said shaft to rotate therewith, said crown disc being 6" to 24" in diameter and approximately 2¾" thick, and having an included apex angle of 70°, an abrasive coating extending approximately one-half of the distance down each slope of said disc from the apex, and means for holding a brush with its longitudinal a .s vertical and in a plane parallel to and passing through said shaft, with the brush bristles extending downwardly and beyond said abrasive coating on said crown disc, said means being slidable parallel to said shaft.

5. An apparatus for taper grinding brushes bristled with artificial filaments, said apparatus comprising a rotatably mounted shaft, means for rotating said shaft, a crown disc axially mounted on said shaft to rotate therewith, said crown disc having an included apex angle of 60°–80°, an abrasive coating extending from one-fourth to three-fourths of the distance down each slope of said disc from the apex, a pair of associated shafts slidably mounted parallel to said first shaft, and clamp means fixedly mounted on said pair of shafts and adapted to hold a brush with its longitudinal axis at right angles to said first shaft and in a plane parallel to and passing through said first shaft, with the brush bristles extending toward said first shaft and beyond said abrasive coating on said crown disc.

6. An apparatus for taper grinding brushes bristled with artificial filaments, said apparatus comprising a rotatably mounted shaft, means for rotating said shaft, a crown disc axially mounted on said shaft to rotate therewith, said crown disc being 6" to 24" in diameter and 2" to 4" thick, and having an included apex angle of 60°-80°, an abrasive coating extending from one-fourth to three-fourths of the distance down each slope of said disc from the apex, a pair of associated shafts slidably mounted parallel to said first shaft, and clamp means fixedly mounted on said pair of shafts and adapted to hold a brush with its longitudinal axis at right angles to said first shaft and in a plane parallel to and passing through said first shaft, with the brush bristles extending toward said first shaft

and beyond said abrasive coating on said crown disc.

7. An apparatus for taper grinding brushes bristled with artificial filaments, said apparatus comprising a rotatably mounted, horizontal shaft, means for rotating said shaft, a crown disc axially mounted on said shaft to rotate therewith, said crown disc being 6" to 24" in diameter and 2" to 4" thick, and having an included apex angle of 60°–80°, an abrasive coating extending from one-fourth to three-fourths of the distance down each slope of said disc from the apex, a pair of associated horizontal shafts slidably mounted parallel and above said first shaft, and clamp means fixedly mounted on said pair of shafts and adapted to hold a brush with its longitudinal axis vertical and in a plane parallel to and passing through said first shaft, with the brush bristles extending downwardly and beyond said abrasive coating on said crown disc.

8. An apparatus for taper grinding brushes bristled with artificial filaments, said apparatus comprising a rotatably mounted shaft, means for rotating said shaft, a crown disc axially mounted on said shaft to rotate therewith, said crown disc being 6" to 24" in diameter and 2" to 4" thick, and having an included apex angle of 60°–80°, a coating of abrasive particles passing a 45-mesh screen and retained on a 55-mesh screen, extending from one-fourth to three-fourths of the distance down each slope of said disc from the apex, and means for holding a brush with its longitudinal axis at right angles to said shaft and in a plane parallel to and passing through said shaft, with the brush bristles extending toward said shaft and beyond said abrasive coating on said crown disc, said means being slidable parallel to said shaft.

9. Process of taper grinding a brush bristled with artificial filaments, which comprises moving said brush reciprocally past a crown disc rotating at a peripheral speed of 1,000 feet to 10,000 feet per minute, in a line parallel to the axis of rotation of said crown disc, said disc having an abrasive coating extending part way down each slope thereof from its apex and having an included apex angle of 60°–80°, and said brush being positioned so that its longitudinal axis is at right angles to the axis of rotation of said crown disc and in a plane parallel to and passing through said axis of rotation, with the brush bristles extending toward said crown disc and beyond said abrasive coating thereon.

10. Process of taper grinding a brush bristled with artificial filaments, which comprises moving said brush reciprocally at a speed of 3" to 9" per minute past a crown disc rotating at a peripheral speed of 6,000 feet to 10,000 feet per minute, in a line parallel to the axis of rotation of said crown disc, said disc having an abrasive coating extending part way down each slope thereof from its apex and having an included apex angle of 60°–80°, and said brush being positioned so that its longitudinal axis is at right angles to the axis of rotation of said crown disc and in a plane parallel to and passing through said axis of rotation, with the brush bristles extending toward said crown disc and beyond said abrasive coating thereon.

11. Process of taper grinding a brush bristled with artificial filaments, which comprises moving said brush reciprocally at a speed of about 6" per minute past a crown disc rotating at a peripheral speed of about 6,000 feet per minute, in a line parallel to the axis of rotation of said crown disc, said disc having an abrasive coating extending part way down each slope thereof from its apex and having an included apex angle of 60°–80°, and said brush being positioned so that its longitudinal axis is at right angles to the axis of rotation of said crown disc and in a plane parallel to and passing through said axis of rotation, with the brush bristles extending toward said crown disc and beyond said abrasive coating thereon.

FRANCIS GRAHAM CUNNINGHAM.