March 8, 1938. N. L. SNOW ET AL 2,110,533

SOOT BLOWER

Original Filed Dec. 27, 1932 4 Sheets-Sheet 1

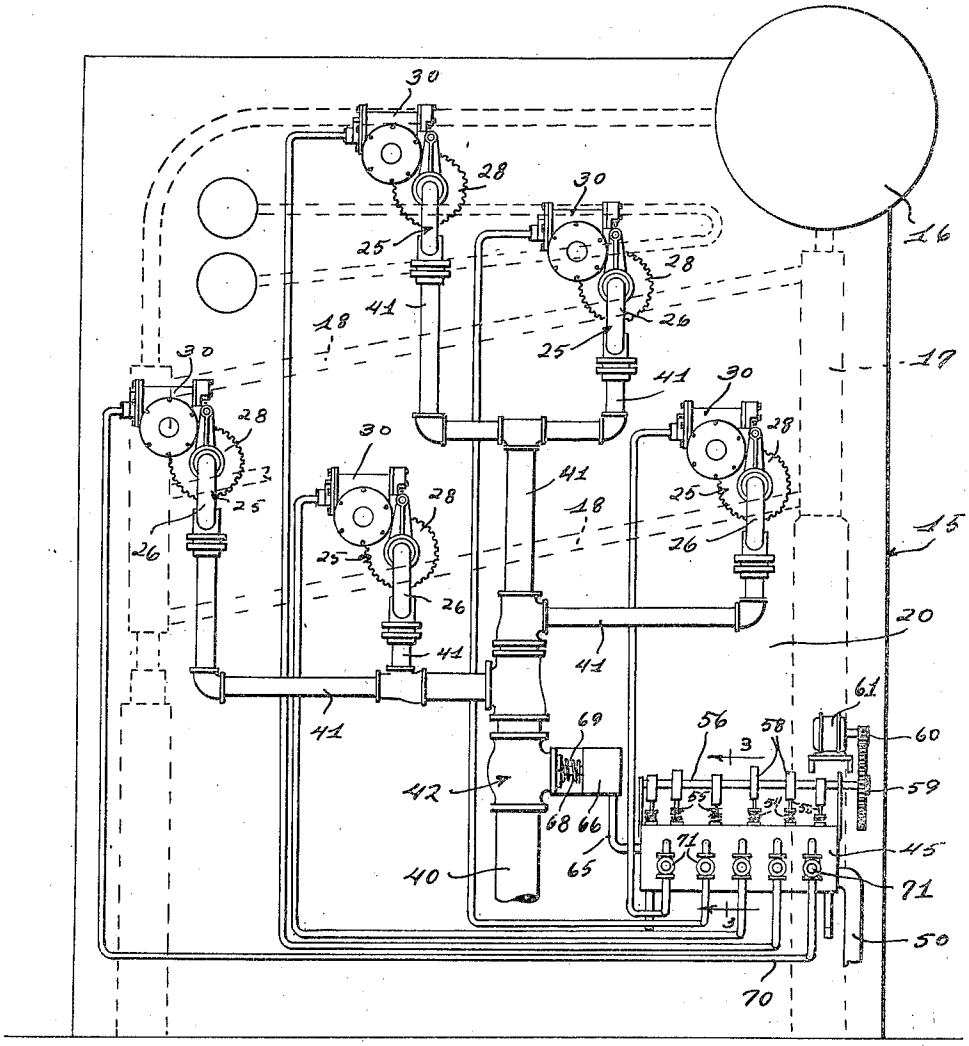

Fig. 1.

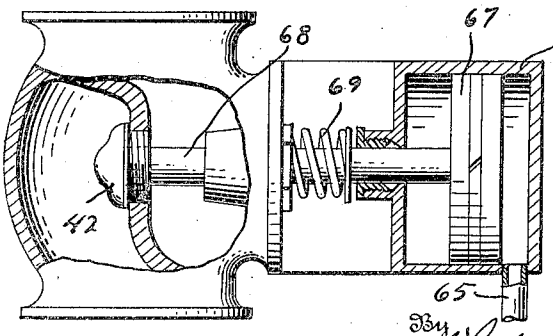

Fig. 5.

Inventors
Norman L. Snow
Willis P. Thomas
Harry E. Brelsford
Curtis L. Howse
Frank Bowers

By Whittemore, Hulbert & Whittemore & Belknap
Attorneys

March 8, 1938. N. L. SNOW ET AL 2,110,533

SOOT BLOWER

Original Filed Dec. 27, 1932 4 Sheets-Sheet 2

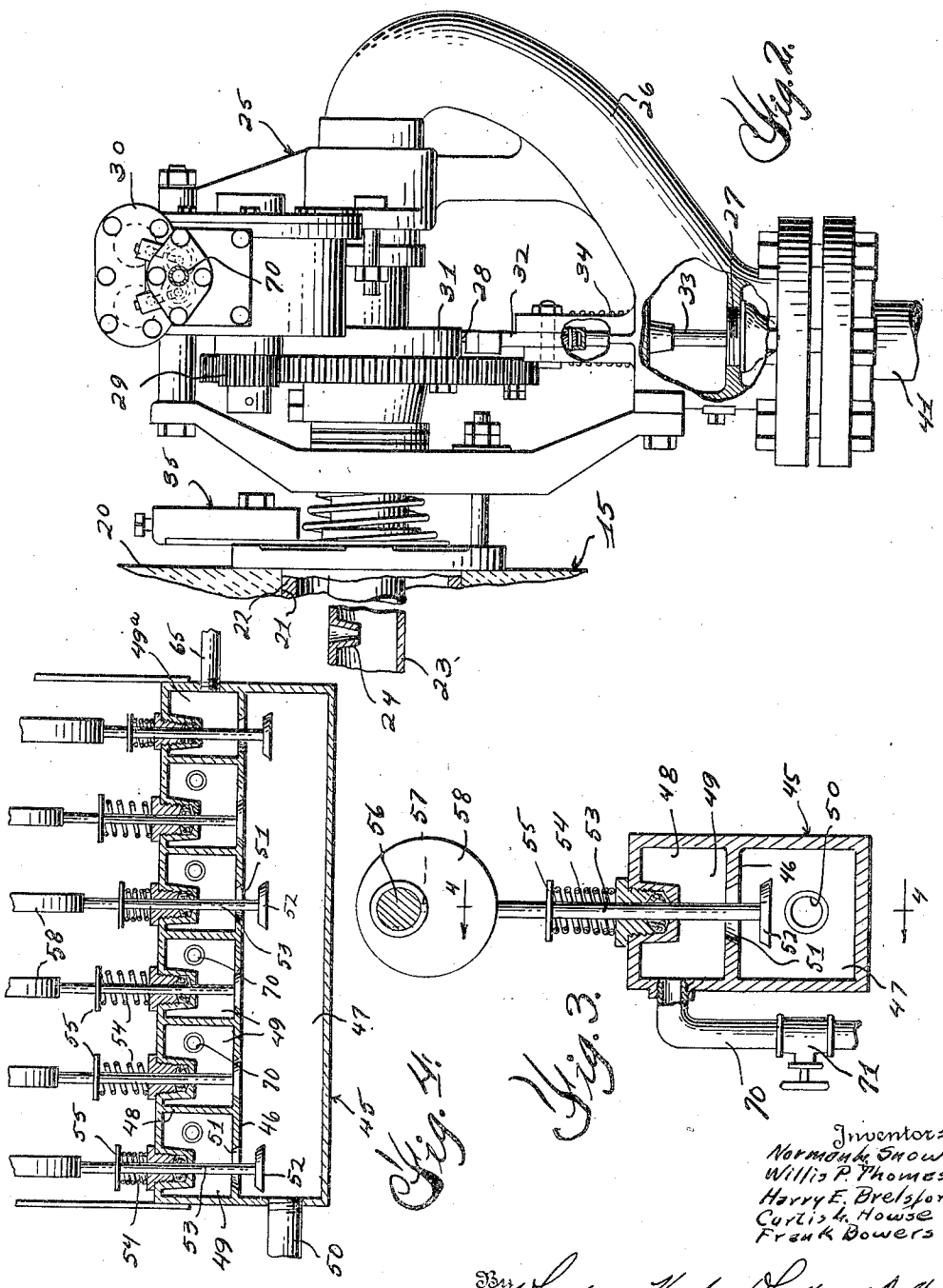

Fig. 2.

Fig. 4.

Fig. 3.

Inventors
Norman L. Snow
Willis P. Thomes
Harry E. Brelsford
Curtis L. Howse
Frank Bowers

By Whittemore, Hulbert & Whittemore & Belknap
Attorneys

March 8, 1938. N. L. SNOW ET AL 2,110,533

SOOT BLOWER

Original Filed Dec. 27, 1932 4 Sheets-Sheet 3

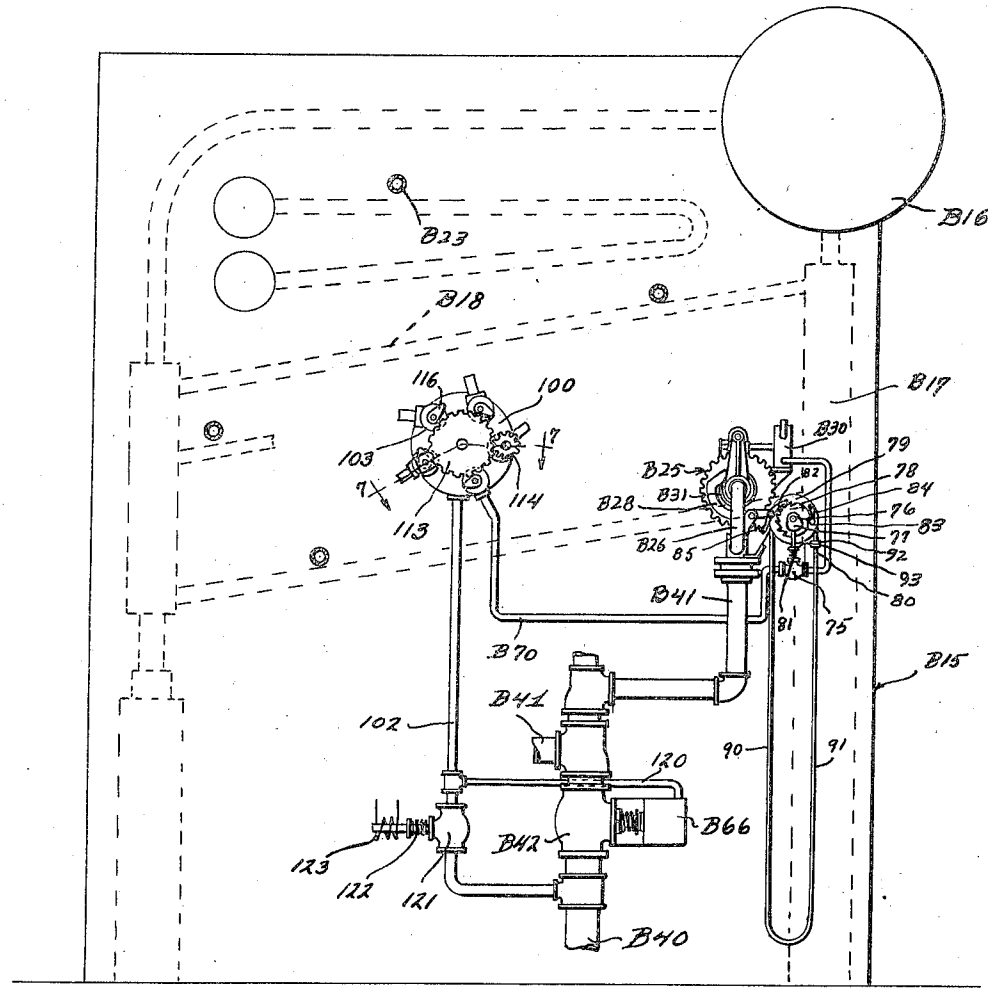

Fig. 6.

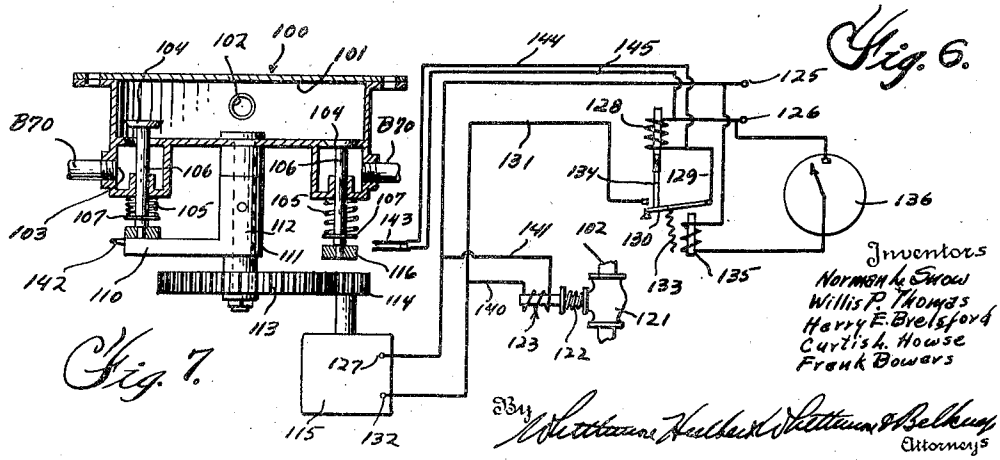

Fig. 7.

Inventors
Norman L. Snow
Willis P. Thomas
Harry E. Brelsford
Curtis H. Howse
Frank Bowers

By Whittemore, Hulbert & Whittemore & Belknap
Attorneys

March 8, 1938. N. L. SNOW ET AL 2,110,533

SOOT BLOWER

Original Filed Dec. 27, 1932 4 Sheets-Sheet 4

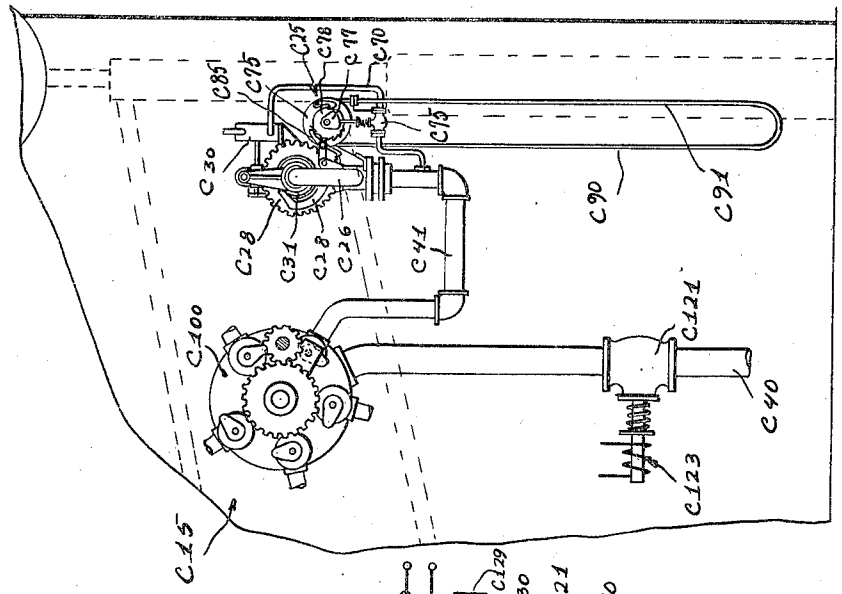

Fig. 9.

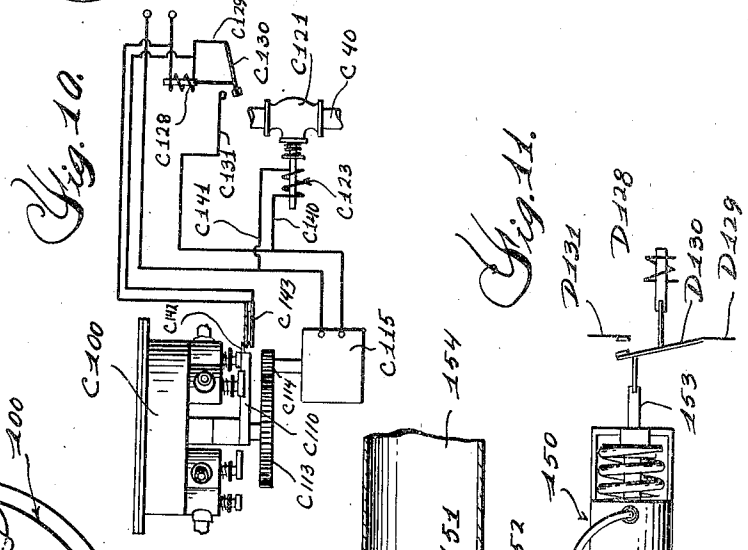

Fig. 10.

Fig. 11.

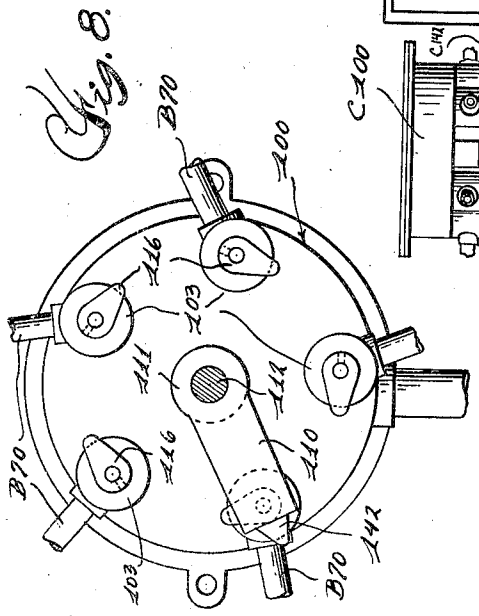

Fig. 8.

Inventors
Norman L. Snow
Willis P. Thomas
Harry E. Brelsford
Curtish House
Frank Bowers

By Whittemore, Hulbert & Whittemore & Belknap
Attorneys

Patented Mar. 8, 1938 2,110,533

UNITED STATES PATENT OFFICE

2,110,533

SOOT BLOWER

Norman L. Snow, New Canaan, Conn., and Willis P. Thomas, Highland Park, Harry E. Brelsford, Birmingham, and Curtis L. Howse and Frank Bowers, Detroit, Mich., assignors to Diamond Power Specialty Corporation, Detroit, Mich., a corporation of Michigan

Application December 27, 1932, Serial No. 649,105
Renewed January 10, 1938

12 Claims. (Cl. 122—392)

This invention relates to a fluid heater cleaner of the character which includes a movable blower element adapted to discharge cleaning fluid adjacent portions of the fluid heater to be cleaned.

One of the primary objects of this invention is to provide a cleaner of the above mentioned character which will include a plurality of movable blower elements and which will include means for operating these blower elements in any desired order and at a point remote from the points of location of the blower elements.

The invention still further contemplates the provision of a cleaner of the above mentioned character which will include a plurality of blower elements and which will include means whereby selected ones of these blower elements may be operated at the will of the operator.

Th above and numerous other objects and advantages of this invention will become more apparent as the following description proceeds, particularly when reference is had to the accompanying drawings, wherein:

Fig. 1 is a semi-diagrammatic view of a fluid heater showing a plurality of cleaners associated with this fluid heater and showing a control means for these cleaners;

Fig. 2 is an elevational view with parts broken away of one of the cleaners shown in Fig. 1;

Fig. 3 is a sectional view taken substantially on the line 3—3 of Fig. 1;

Fig. 4 is a sectional view taken substantially on the line 4—4 of Fig. 3;

Fig. 5 is a sectional view taken through a portion of the structure shown in Fig. 1;

Fig. 6 is a view similar to Fig. 1 showing a slightly modified form of construction;

Fig. 7 is a semi-diagrammatic view partly in section showing a portion of the structure shown in Fig. 6 and the control means for the same;

Fig. 8 is an elevational view of a portion of the structure shown in Fig. 7;

Fig. 9 is a view similar to Fig. 6 showing a further slightly modified form of construction;

Fig. 10 is a semi-diagrammatic elevational view of the control means for the structure shown in Fig. 9; and

Fig. 11 is a semi-diagrammatic view partly in section showing a slightly modified form of construction.

Referring then particularly to the drawings wherein like reference characters designate corresponding parts throughout all views, the numeral 15 designates generally a fluid heater with which cleaners constructed in accordance with the teachings of this invention may be associated. This fluid heater is shown as comprising a boiler having the drums 16 and headers 17 suitably connected by tubes 18. It is to be understood that the boiler is shown merely for the purposes of illustration since the invention may be associated with a boiler of this or any other character or with any fluid heater or like apparatus having surfaces to be cleaned.

Referring to Fig. 2 of the drawings, the numeral 20 designates a portion of the wall of the fluid heater 15. This wall is provided with an opening 21 in which is mounted a wall box 22. Projecting through this wall box is a blower element 23 having discharge nozzles for discharging cleaning fluid adjacent the portions of the fluid heater to be cleaned. One of these discharge nozzles is shown and designated by the reference character 24.

Exteriorly of the fluid heater wall the blower element is journaled in a head designated by the reference character 25. This head comprises a gooseneck 26 adapted to be connected at its one end to a suitable cleaning fluid supply pipe and communicating at its other end with the blower element whereby cleaning fluid admitted to the gooseneck will be supplied to the blower element. Disposed in the lower end of the gooseneck is a valve 27 which controls the flow of cleaning fluid through the gooseneck and thus the admission of the cleaning fluid to the blower element in a manner which will hereinafter be more fully described.

For rotating the blower element there is provided a gear 28 fixed to the blower element for rotation with the same. A pinion 29 engages this gear to drive the same, and for driving this pinion there is provided a fluid motor 30 which may be of any suitable construction. It will be understood that whenever fluid under pressure is admitted to the fluid motor, the pinion 29 will be rotated to thus rotate gear 28 and the blower element 23.

The head includes means for actuating the valve 27 in timed relation to the rotation of the blower element, and this means includes a cam 31 fixed for rotation with the blower element and arranged to engage a lever 32 suitably pivotally mounted in the blower head. This lever engages the upper end of the stem 33 of valve 27, periodically depressing this stem to open the valve against the force exerted by the spring 34 which, together with the pressure of the cleaning fluid acting on valve 27, normally holds the valve closed. The entire blower head may be conveniently floatingly supported from the wall box 22 by a suitable float-

ing construction designated generally by the reference character 35.

Referring now again to Fig. 1 of the drawings, it will be noted that a plurality of blower elements and blower heads are associated with the fluid heater 15. Five of these heads are shown, it being understood that the blower heads and elements associated with the same are suitably located so as to effect a desired cleaning of the fluid heater.

For supplying cleaning fluid to the several heads and thus to the several blower elements, there is provided a main cleaning fluid supply header 40 having branches 41 which are connected to the lower ends of the several goosenecks 26. Disposed in the header 40 in advance of the first or lowest branch 41 is a valve 42 which controls the flow of cleaning fluid from the main header to the several branches. This valve 42 is adapted to be actuated in a manner which will hereinafter be more fully described.

Disposed at any convenient point adjacent to or remote from the fluid heater 15 is a valve casing 45 divided longitudinally by a horizontal partition 46 to form a lower chamber 47 and an upper chamber which is divided by vertical partitions 48 into a series of small compartments 49. Sufficient compartments 49 are formed to provide one for each blower head 25 and an additional one which forms a part of the control means for the valve 42.

Fluid under pressure is supplied to the chamber 47 by means of a suitable conduit 50 which may be conducted to any suitable source of supply (not shown). Formed in the partition 46 are openings 51 controlled by valves 52 having stems 53. These valves are normally held closed by springs 54 which surround the stems 53 and engage collars 55 formed on these stems.

Rotatably supported above the casing 45 is a shaft 56, and adjustably mounted on this shaft 56 as by set screws 57 are cams 58, one cam being provided for each valve stem 53. The shaft 56 may be either manually rotated or may be motor driven as by mounting a suitable gear 59 on the same and providing a pinion 60 engaging this gear and arranged to be driven by a suitable electric or other motor 61.

Tapped into the compartment which forms a part of the control means for the valve 42, which compartment will, for the sake of convenience, be referred to as compartment 49a, is a conduit 65. This conduit communicates with a cylinder 66 in which a piston 67 is mounted, this piston being connected by a stem 68 to valve 42. A spring 69 surrounding stem 68 normally holds the valve 42 closed and the piston in the position shown in Fig. 5 of the drawings.

Tapped into the remaining compartments 49 are conduits 70, and these conduits lead to the several fluid motors 30. It will be understood that each conduit 70 leads to one motor 30, so that as fluid under pressure is admitted to the several conduits, the fluid motors connected to these conduits will be actuated. Suitable valves 71 are disposed in the conduits 70 adjacent the casing 45 whereby they may be conveniently actuated by the attendant.

In the operation of the above described construction, it will be understood that normally all of the valves 52 are closed, so that fluid under pressure in chamber 47 is not admitted to any of the chambers 49 or 49a. At this time the blower elements are stationary, since no fluid is being supplied to the motors 30, and the valves 27 supplying cleaning fluid to the several motors are closed.

When it is desired to operate the several blower elements, the shaft 56 is rotated, either manually or by means of the motor 61, this rotation of the shaft causing cams 58 to engage valve stems 53 to thus open valves 52. The cams are so adjusted that the initial rotation of the shaft 56 opens the valve which places the chamber 49a in communication with chamber 47. Fluid under pressure admitted to chamber 49a is conducted by conduit 65 to cylinder 66 where it acts on piston 67 to open valve 42 and thus admit cleaning fluid to the branches 41. It will be understood that since the several valves 27 associated with the blower heads are closed, cleaning fluid will not at this time be admitted to the blower elements from the branches 41.

Continued rotation of shaft 56 will effect an opening of the remaining valves 52 so that fluid under pressure will flow from the several compartments 49 through the conduits 70 to the fluid motors 30. As each fluid motor is supplied with fluid under pressure, it will be actuated to rotate the blower element with which it is associated, and as each blower element rotates, its respective valve 27 will be periodically actuated to admit cleaning fluid from its respective branch header 41. Obviously, the actuation of the several blower elements may be continued as long as cam shaft 56 is rotated and valve 42 is held open by fluid acting on piston 67. When the cleaning operation has been completed, the shaft 56 will have been rotated to such a position that all of the valves 52 are closed, with the result that fluid under pressure will no longer be supplied to the fluid motors 30, and valve 42 will be closed by the cleaning fluid under pressure acting on the same and by the spring 69.

It will be apparent that the shape of the cams 58 and thus the period of time which each cam remains in engagement with its respective valve stem will determine the period of time which each blower element will operate and thus the number of revolutions which each blower element will make before the supply of fluid under pressure to its respective motor is cut off. Thus, by properly designing cams 58, any desired interval of blowing may be obtained. Further, the cams 58, being adjustably mounted as they are on the shaft 56, may be suitably set so that the blower elements may be caused to operate in any desired sequence or, if desired, two or more of the blower elements may be caused to operate at a time. If it is desired that only certain of the blower elements be operated at any given time, the valves 71 controlling the flow of fluid under pressure to the blower elements which are not to be operated may be closed, with the result that regardless of the rotation of shaft 56, these blower elements will not be operated. Thus the control means provides not only for an operation of the blower elements in any desired sequence, but provides also for the operation of only a selected few of the blower elements if this is desired.

In Figs. 6 to 8, inclusive, of the drawings, a modified form of construction is disclosed which will hereinafter be referred to as embodiment B. All reference characters designating parts corresponding to parts disclosed in embodiment A just described will be prefixed by the letter B.

In this modified form of construction there is diagrammatically illustrated a fluid heater B15 which is shown as comprising a boiler having

drums B16, headers B17 and tubes B18. Suitably located with reference to the fluid heater as to discharge cleaning fluid adjacent the portions of the same to be cleaned, are blower elements B23, these elements being suitably journaled in heads B25. It will be noted that in Fig. 6 of the drawings only one of the heads is shown in detail, the location of the remaining blower elements being diagrammatically illustrated.

The heads B25 are similar to the heads 25 in that each comprises a gooseneck B26 arranged to receive cleaning fluid from a suitable branch header B41 and arranged to conduct this cleaning fluid to the end of its respective blower element. Fixed to each blower element is a gear B28 adapted to be driven in any suitable manner by a fluid motor B30 which may be of any desired construction. Associated with each gear B28 is a cam B31 arranged to engage a lever B28, these levers being arranged to actuate suitable control valves (not shown) in the blower heads. It will be understood that the valves in the blower heads are periodically actuated upon rotation of the blower elements to admit cleaning fluid from the branch headers to the blower heads.

For supplying fluid under pressure to the fluid motors B30 there are provided conduits B70, these conduits extending from a suitable distributor valve which will be later described. According to the teachings of this invention, there is preferably located in each conduit B70 a valve 75, these valves being adapted to control the flow of fluid under pressure through the conduits to the several fluid motors. It is a feature of this embodiment of the invention that each valve 75 may be opened and held open during a predetermined operation of the blower element to the head of which its respective conduit leads.

In our application Serial No. 649,106, filed December 27, 1932, we have disclosed several control mechanisms capable of actuating control valves such as the valves 75 in the manner above mentioned. One form of the construction disclosed in the said application will be described, but it is to be understood that there may be substituted for the particular control mechanism disclosed, any of the other control mechanisms disclosed in the above mentioned application. The particular control mechanism selected for the purposes of illustration comprises a shaft 76 on which are mounted a cam 77, a ratchet wheel 78 and a sheave wheel 79. The cam and ratchet wheel are fixed for rotation as a unit and relative to the sheave 79, and the cam is so arranged that it may be rotated to a position where it engages the stem 80 of valve 75 to open this valve and to hold the same open against the force exerted by a spring 81 which is sleeved on the valve stem and engages a suitable collar on the same.

The ratchet wheel 78 is provided with the series of ratchet teeth 82 and with an enlarged notch 83. The latter is adapted to be engaged by a pawl 84 pivotally mounted on the sheave wheel 79, so that upon a predetermined rotation of the sheave wheel, the latter may be coupled to the ratchet wheel to drive the same. The ratchet teeth 82 on the ratchet wheel are adapted to be engaged by a pawl 85 which is pivotally secured to an extension of the valve actuating lever B28.

Trained on the sheave wheel 79 is a chain which has the pendant ends 90 and 91, the latter passing through a guide 92 suitably carried by the blower head. Fixed to the pendant end 91 is a collar 93 adapted to engage the guide 92 to limit movement of the flexible chain in one direction.

In operation of this control mechanism, it will be understood that the parts will normally be in such a position that the cam 77 is moved out of engagement with the valve stem 80 and the valve 75 is closed by the spring 81. If now, the end 91 of the chain is pulled to rotate the sheave wheel in a clockwise direction, the pawl 84 carried by the sheave wheel may be moved to a position where it will engage in the enlarged notch 83 in the ratchet wheel. If now, the sheave wheel is rotated in a counter-clockwise direction by pulling upon the end 90 of the chain, the ratchet wheel will be moved with the sheave wheel, the sheave wheel being coupled to the ratchet wheel by the pawl 84. Movement of the ratchet wheel will move the cam 77 to a position where this cam will open valve 75 and will hold the valve open, the movement of the ratchet wheel and thus of the cam being predetermined by the proper positioning of collar 93 on the flexible chain.

With the valve 75 open, it will be apparent that fluid under pressure in conduit B70 may pass to the fluid motor B30 to drive the blower element with which this motor is associated. Each time the blower element moves through one revolution, the lever B28 will be actuated to open the control valve in the blower head during a predetermined portion of the rotation of the blower element. Movement of the lever B28 incident to actuation of the control valve will impart a step by step rotative movement to the ratchet wheel 78 by virtue of the engagement of pawl 85 with the ratchet teeth 82. This rotative movement of the ratchet wheel will carry with it the cam 77, ultimately moving the latter to a position where the valve 75 may be closed by the spring 81. It will be apparent that the initial setting of the cam 77 will determine the movement thereof necessary to release the valve 75 and thus will predetermine the amount of operation which will be imparted to the blower element before the valve 75 is closed and the supply of power to the fluid motor is cut off. It will be obvious that the cam and associated control mechanism may be set so that any predetermined desired number of rotative movements will be imparted to the blower element before the valve 75 is closed.

For supplying fluid under pressure to the conduits B70, there is provided a valve casing or steam chest 100. This steam chest may, as illustrated, be substantially circular and provides a chamber 101 into which a fluid pressure supply pipe 102 is tapped. Disposed circumferentially of the steam chest at one side thereof are chambers 103, and each conduit B70 is tapped into one of these chambers. Valves 104 control the flow of fluid under pressure from the chamber 101 to the chambers 103, these valves being normally held closed by the pressure of the fluid in the chamber 101 and by springs 105 which surround the valve stems 106 and engage collars 107 carried by these stems.

For opening the valves 104 there is provided an arm 110 which extends radially from a hub 111 fixed to a shaft 112 journaled centrally of the steam chest 100. This shaft and thus the arm 110 may be rotated by a gear 113 driven by a pinion 114 which in turn is driven by an electric motor 115.

It will be apparent that as the arm 110 is rotated, it will successively actuate the valves 104. The length of time that each valve 104 is held open will be predetermined by the speed of rota-

tion of the arm 110, by the width of this arm and by the adjustment of suitable caps 116 fixed to the ends of the stems 106. Thus if the caps 116 are positioned so as to extend substantially circumferentially of the steam chest, the valves 104 will be held open for a longer period of time, while if the caps 116 are adjusted to extend substantially radially of the steam chest, the valves 104 will be held open for shorter periods of time. Each cap 116 is preferably individually adjustable with reference to its respective valve stem, so that the different valves 104 may be held open for different periods of time as desired.

For supplying cleaning fluid to the several blower elements and fluid under pressure to the steam chest and thus to the actuating motors, there is provided a main header B40. Disposed in this main header is a valve B42 which is adapted to be actuated by a suitable piston (not shown) located in a cylinder B66. A conduit 120 provides communication between the cylinder B66 and the conduit 102 so that fluid under pressure may be admitted from this conduit to the cylinder to actuate the piston in the cylinder and to thus open valve B42.

The conduit 102 is tapped into the main header B40 to receive cleaning fluid from this header. Disposed in the conduit 102 between the header B40 and the point of connection of conduit 120 with conduit 102 is a valve 121. This valve is normally held closed by a spring 122 and is adapted to be moved to open position by a solenoid 123. Thus, whenever this solenoid is energized, valve 121 will be opened to admit fluid under pressure to the steam chest 100 and to the cylinder B66.

For controlling the supply of electrical energy to the motor 115 and solenoid 123, the circuits shown in Fig. 7 of the drawings may be provided. Referring then to this figure, the leads 125 and 126 are connected to any suitable source of current (not shown). The lead 125 is connected directly to one terminal 127 of the motor 115. The lead 126 is directly connected to a solenoid 128, and the other terminal of this solenoid is connected by a lead 129 to a switch arm 130. This switch arm is adapted to close the circuit between lead 129 and a lead 131, this latter lead being directly connected to the other terminal 132 of the electric motor. The switch arm 130 is normally held in its non-bridging position by a spring 133. The core of the solenoid 128 is connected by a link 134 to the switch arm 130 so that when the solenoid is energized the switch arm will be moved to its bridging position against the force exerted on the same by the spring 133. While the switch arm may, if desired, be manually actuated, there is disclosed a solenoid 135, the energization of which is controlled by a suitable clock 136, so that periodically the solenoid 135 will be actuated to momentarily move the contact 130 to its bridging position. It will be apparent that as soon as the switch arm is moved to its bridging position, the solenoid 128 will be energized so that the switch arm will be held in its bridging position until the circuit through the solenoid 128 is broken.

The leads 140 and 141 of the solenoid 123 are connected to the leads 131 and 125, respectively, so that whenever the circuit through the electric motor 115 is closed, the solenoid 123 will be energized to open valve 121.

For the purpose of de-energizing solenoid 128 after a predetermined rotation of the arm 110, this arm is provided with a cam portion 142 adapted to close a switch 143. The leads 144 and 145 from this switch are so connected to the leads 126 and 129 as to short-circuit the solenoid 128 when the switch 143 is closed.

The operation of embodiment B of the invention is as follows. Upon completion of a cycle of operation, the switch 143 will be closed, the arm 130 will be out of engagement with contact 131, and the valves in the several blower heads as well as the valves 121, B42 and 75, will be closed. To operate the blower elements, the flexible chains associated with the blower elements are actuated to open the valves 75 associated with the blower heads. The switch arm 130 is then moved to a position where it bridges contacts 129 and 131, the current flowing through leads 144 and 145 and through switch 143 until the motor 115 has been actuated sufficiently to move cam 142 out of engagement with switch 143. As soon as this occurs, the current will flow through solenoid 128, energizing the latter and holding the arm 130 in bridging position. The connecting of leads 131 and 129 will cause valve 121 to be opened and will of course also effect an energization of the motor 115 so that the arm 110 will be rotated. Opening of valve 121 will admit cleaning fluid under pressure to chamber 101 of the steam chest and will also admit cleaning fluid under pressure to cylinder B66 to thus open the valve B42 so that cleaning fluid will be admitted to the several branch headers and thus supplied to the blower heads.

As the arm 110 is rotated, it will successively actuate valves 104, admitting fluid under pressure from the chamber 101 to the conduits B70. Since the valves 75 in these conduits have been opened, the fluid motors associated with the blower heads will be operated to rotate their respective blower elements. Each valve 75 associated with each head will be automatically closed to cut off the operation of its respective head in dependence upon the initial setting of its particular control mechanism.

The sequence of operation of the several heads will be dependent upon the order in which the conduits B70 are connected to the steam chest 100. The motor 115 will continue to rotate until arm 110 makes a complete revolution, at which time cam 142 carried by this arm will close switch 143, thus de-energizing solenoid 128 so that spring 133 may move arm 130 to its non-bridging position. This will, of course, result in a de-energization of the motor 115 and the solenoid 123 with the result that rotation of the arm 110 will be terminated and the supply of fluid to the steam chest and to the several blower heads will be terminated. It will be understood that to initiate the operation of the system, the switch arm 130 must be held in bridging position sufficiently long for the motor to rotate arm 110 to a point where the cam 142 is moved out of engagement with switch 143, at which time the solenoid 128 will be energized to hold the switch arm closed.

If it is desired that all of the blower heads operate, all of the chains associated with these heads will be actuated. If, however, it is desired that only a few of the blower heads operate, then only the chains or flexible elements associated with these heads will be actuated, so that even though the several conduits B70 are all placed in communication with the source of fluid under pressure, fluid under pressure will only be admitted to the fluid motors associated with those heads which it is desired to operate. It will be apparent that by virtue of the control mechanism disclosed associated with each blower head, that

while the operation of the entire system may be initiated by actuation of switch arm 130, only those blower elements which it is desired to operate will operate, and the blower elements which are operated will only be operated the predetermined desired amount.

In Figs. 9 and 10 there is disclosed a further modified form of construction which will, for the sake of convenience, be referred to as embodiment C. In this form of construction there is associated with the fluid heater C15 a plurality of blower elements and blower heads, one of the blower heads being illustrated and designated by the reference character C25. This blower head is similar in construction to that disclosed in embodiment B in that it includes a gooseneck C26, this gooseneck being connected at its lower end to branch supply pipe C41 and being so arranged that it may supply cleaning fluid to the blower element (not shown).

For rotating the blower element, there is provided fluid motor C30 which, by means of a suitable pinion (not shown), drives gear C28 which is secured to the blower element. Cam C31 fixed for rotation with the blower element actuates lever C32, this lever being arranged to actuate the valve (not shown) which controls the admission of cleaning fluid from the branch header to the blower head. Disposed in conduit C70 which supplies fluid under pressure to the fluid motor is valve C75 which is adapted to be controlled by a cam C77 fixed for rotation with ratchet wheel C78. For rotating the ratchet wheel to initially adjust the position of cam C77, there is provided sheave wheel C79 on which a flexible actuating element is trained, this element having the depending ends C90 and C91. For moving the cam out of holding relation with respect to the stem of valve C75, there is provided the pawl C85 which is actuated by the lever C32 and which engages the teeth on the ratchet wheel C78. As in the previously described form of construction, the control mechanism provides that valve C75 may be opened and held open for any predetermined desired number of rotative movements of the blower elements.

In this modified form of construction, however, the main cleaning fluid supply header C40 is connected directly to the fluid chest C100. Disposed in the header C40 is valve C121 which is adapted to be actuated by solenoid C123, the arrangement being such that when the solenoid is energized, the valve C121 will be opened and the cleaning fluid will be supplied directly to the fluid chest.

The branch headers C41, instead of being connected directly to the main header C40, are connected to the latter through the fluid chest C100, so that as the valves associated with the fluid chest are actuated, cleaning fluid will be supplied from the fluid chest to the several branch headers. Further, in this modified form of construction, the conduit C70, instead of extending to the fluid chest, is tapped into the branch header C41.

For rotating the control arm C110 of the fluid chest, there is provided gear C113, pinion C114 and electric motor C115. This electric motor is adapted to be energized when contact arm C130 is actuated to bridge contacts C131 and C129. A solenoid C128 is provided for holding the switch arm C130 in bridging position, and this solenoid is adapted to be short-circuited when switch C143 is closed by cam C142. Solenoid C123 is electrically connected to the leads to the motor C115 by the leads C140 and C141.

In operation, it will be apparent that whenever the switch arm C130 is moved to its bridging position, the valve C121 will be opened to admit cleaning fluid directly to the distributing valve C100. At the same time the motor C115 will be energized to rotate arm C110 and to thus successively actuate the valves associated with the steam chest. Thus cleaning fluid will be supplied from the steam chest or rotary valve to the several branch headers C41, but this cleaning fluid will not be supplied to the several blower elements nor to the motors associated with the same unless the valves C75 are opened. Thus, if it is desired that all of the blower elements be actuated, all of the valves C75 may be opened, while if it is desired that only certain of the blower elements be actuated, then the valves C75 associated with these heads only, will be opened.

With this modified form of construction it will be apparent that the length of the conduits C70 may be reduced to a minimum, since these conduits need only be tapped into the branch headers which supply cleaning fluid to the several blower heads. As in the previously described form of construction, operation of the system may be initiated by actuation of the switch arm C130, and the several blower elements will operate, each for the period of time desired by the attendant.

In Fig. 11 there is disclosed embodiment D of the invention, this embodiment comprising modified means for actuating the switch arm which initiates the operation of the entire system. Referring then to this figure, the numeral D130 designates a switch arm which is adapted to bridge leads D129 and D131. It will be understood that when the switch arm is moved to its bridging position, it will be held in this position by a solenoid D128 until the operation of the system which it controls has been completed, at which time the solenoid will be deenergized and the switch arm will be moved to its non-bridging position.

In this modified form of construction it is contemplated that the switch arm D130 will be actuated by means responsive to either the temperature in the uptake from the boiler or fluid heater with which the cleaners are associated or the temperature of the superheated steam from the boiler. Provision is made that should the temperature of the gases in the uptake rise above a predetermined point, thus indicating the necessity of cleaning the fluid heater, the switch arm will be moved to its bridging position, thus initiating an operation of the several blower elements associated with the fluid heater. Likewise, should the temperature of the superheated steam fall below a predetermined amount, the switch arm D130 would be actuated to initiate an operation of the several blower elements.

To accomplish this result, there is provided a thermoresponsive member designated generally by the reference character 150. While this thermoresponsive device may be of any desired construction, it is shown as being of the type which includes a flexible bellows or the like (not shown) and a bulb 151 which contains a suitable thermoresponsive fluid and which is connected to the bellows by a suitable tube 152. The bellows is arranged to actuate a stem 153 which may be either directly connected to the switch arm D130, as illustrated, or indirectly connected thereto, so that the desired actuation

of the switch arm may be effected upon any predetermined actuation of the thermoresponsive device.

The numeral 154 designates, for example, the uptake from the fluid heater, although it is to be understood that the member 154 might be the conduit which conducts the superheated steam from the boiler with which the system is associated. As the temperature within conduit 154 varies, the thermoresponsive device will be actuated, and upon a predetermined actuation of this device, the switch arm D130 will be actuated to initiate the operation of the cleaning system.

From the above it will be apparent that the invention provides means whereby a plurality of blower elements may be associated with a fluid heater to clean the same. The invention provides means whereby the operation of the system of which these elements form a part may be initiated, the system then continuing to operate and its operation being automatically terminated after a cycle of operation has been completed. The invention further provides that associated with each blower element there may be a control means by which the amount of operation of each blower element may be varied to suit the conditions encountered and whereby, if desired, only certain of the elements of the system will be operated during the cycle of operation of the system.

While the invention has been described with some detail, it is to be understood that the description is for the purposes of illustration only and is not definitive of the limits of the inventive idea. The right is reserved to make such changes in the details of construction and arrangement of parts as will fall within the purview of the attached claims.

What we claim as our invention is:

1. In a soot cleaning system, a plurality of movable blower elements, a fluid motor associated with each blower element for moving the same, a conduit connected to each fluid motor for supplying fluid under pressure to the same, a source of supply of fluid under pressure, a valve associated with each conduit for controlling the flow of fluid under pressure from said source to its respective conduit, a cam associated with each valve for actuating the same, a common drive means for all of said cams and means providing for adjustment of said cams relative to each other to vary the sequence of actuation of said valves.

2. In a soot cleaning system, a plurality of movable blower elements, a head associated with each blower element through which cleaning fluid is supplied to the same, a fluid motor associated with each blower element for moving the same, a header through which cleaning fluid is supplied to all of said heads, a valve in said header for controlling the flow of cleaning fluid through the same, a conduit connected to each fluid motor for supplying fluid under pressure to the same, a rotary distributing valve for controlling the admission of fluid under pressure to said conduits, a connection between said header and distributing valve for conducting fluid from the former to the latter, a valve in said connection and a single means for effecting the actuation of the valve in said connection, the rotation of said distributing valve and the actuation of the valve in said header.

3. In a soot cleaning system, a plurality of movable blower elements, driving means associated with each blower element for moving the same, means for controlling the supply of power to all of said driving means, and means controlled by the temperature in the uptake from the fluid heater with which the blower elements are associated for governing the actuation of said power supply means.

4. In a soot cleaning system for a fluid heater including a steam superheater, a plurality of movable blower elements, a driving means associated with each blower element for moving the same, means for supplying power to all of said driving means, and means controlled by the temperature of the steam from said superheater for initiating the actuation of said power supply means.

5. In a fluid heater cleaner, a blower element, and means operating in dependence upon the temperature in the uptake from the fluid heater with which the blower element is associated for controlling the operation of the blower element.

6. In a cleaner for a fluid heater having a steam super-heater, a blower element, and means operating in dependence upon the temperature of the steam from said super-heater for controlling the actuation of the blower element.

7. In a fluid heater cleaner, a blower element, and means operating to control the supply of cleaning fluid to the blower element in dependence upon the temperature in the uptake from the fluid heater with which the blower element is associated.

8. In a cleaner for a fluid heater having a steam super-heater, a blower element, and means for controlling the supply of cleaning fluid to the blower element in dependence upon the temperature of the steam from said super-heater.

9. In a soot cleaning system, a plurality of blower elements, a fluid motor associated with each element for moving the same, a conduit connected to each fluid motor for supplying fluid under pressure to the same, a valve associated with each conduit for controlling the flow of fluid under pressure through the same, a stem for each of said valves, a cap carried by each stem, and a member movable with reference to said valves and adapted to successively engage said caps to successively actuate said valves, said caps being adjustable with reference to the path of movement of said member to vary the period of supply of fluid under pressure to said conduits.

10. In a soot cleaning system, a plurality of movable blower elements, a drive means associated with each blower element adapted to move the same through a plurality of cycles of movement, each cycle consisting in movement of the blower element away from and substantially back to an initial position, means for controlling the supply of power to all of said driving means, and means associated with each driving means automatically operating to terminate the actuation thereof after the element associated therewith has been actuated through a predetermined plural number of cycles of movement.

11. In a fluid heater cleaner, a blower element, and thermoresponsive means for controlling the supply of cleaning fluid to the blower element, said thermoresponsive means being so arranged as to be responsive to temperature changes occasioned by the depositing of soot on the heat exchange surfaces of the fluid heater.

12. In a soot cleaning system, a plurality of rotatable blower elements, a cleaning fluid supply line for each blower element, a valve in each supply line, means operating to open each valve during a portion of the rotation of its respective

blower element, a driving means for each blower element, means for supplying power to said driving means according to a predetermined desired sequence, and an individual control means for each driving means adjustable to vary the length of the period of operation of the same whereby the number of revolutions of each blower element may be adjusted with reference to the number of revolutions imparted to the other blower elements of the system.

NORMAN L. SNOW.
WILLIS P. THOMAS.
HARRY E. BRELSFORD.
CURTIS L. HOWSE.
FRANK BOWERS.