Oct. 3, 1939. A. M. BRAATEN 2,174,963

ELECTRICAL WAVE RESONANT LINE FILTER

Filed April 30, 1938

Fig. 1

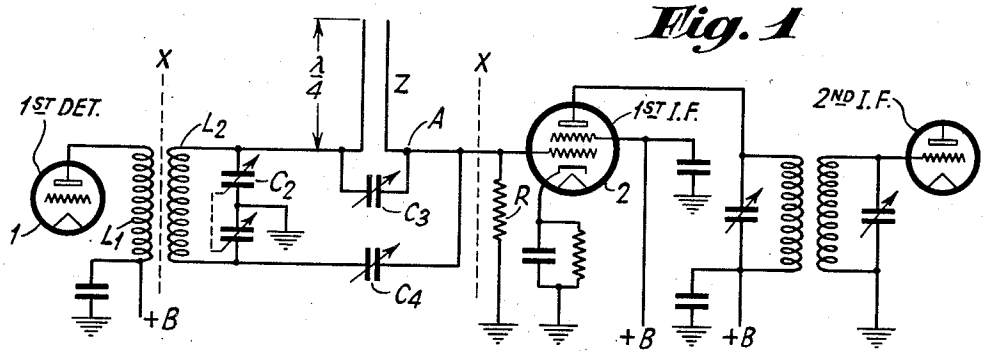


Fig. 2

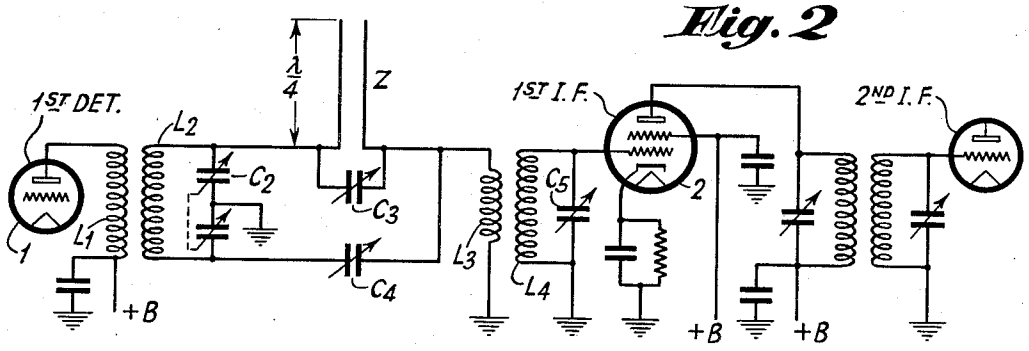


Fig. 3

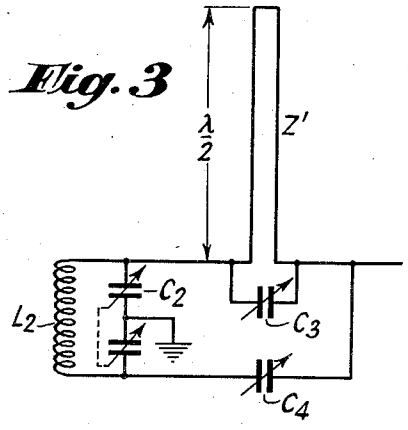


Fig. 4

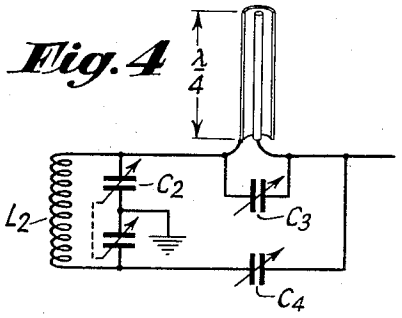


INVENTOR.
ARTHUR M. BRAATEN

BY H. S. Snover

ATTORNEY.

Patented Oct. 3, 1939

2,174,963

# UNITED STATES PATENT OFFICE

2,174,963

## ELECTRICAL WAVE RESONANT LINE FILTER

Arthur M. Braaten, Riverhead, N. Y., assignor to Radio Corporation of America, a corporation of Delaware

Application April 30, 1938, Serial No. 205,142

10 Claims. (Cl. 250—20)

The present invention relates to high frequency circuits using resonant lines as filters between stages. More specifically, the invention relates to the use of a resonant line as a "single-signal" filter for eliminating image signals, whereby signals are heard on only one side of the zero beat in a heterodyne circuit.

Although the invention is hereinafter described with particular reference to a superheterodyne receiving circuit, it is to be distinctly understood that it is not limited in its use thereto, and may find application in other circuit arrangements.

Heretofore, it has been known to employ a piezo-electric crystal as a "single-signal" filter between the first detector stage and the first intermediate frequency stage in superheterodyne receiving circuits. A crystal is equivalent to a circuit having very high inductance, very small capacitance, and medium resistance in series. The frequency at which the equivalent inductive and capacitive reactances are equal is the natural frequency of the crystal. Since the crystal is mounted between electrodes, there is a shunt capacitance across the equivalent series circuit of the crystal. This capacitance is that between the electrodes with the quartz crystal as the dielectric. At a frequency slightly higher than the crystal's natural frequency, the equivalent inductive reactance of the crystal will be equal to the capacitive reactance of the shunt capacitance, resulting in a parallel-resonant point. The circuit is therefore anti-resonant at this higher frequency. By the introduction of a neutralizing voltage of opposite phase, the anti-resonant point may be shifted over a limited range on either side of the crystal resonance frequency. This is useful in eliminating an undesired signal near the desired one. In the "single-signal" type receiver, the anti-resonant point is adjusted to coincide with the intermediate frequency corresponding to the audio-frequency image of the desired signal. This image is thus rejected, so that signals are heard only on one side of zero beat; hence the name "single-signal."

One difficulty experienced with a crystal used as a "single-signal" filter is that there are objectionable resonance points caused by the various modes of oscillation of the crystal. Another difficulty with a crystal used as a "single-signal" filter is that there is very little control of the selectivity.

The foregoing difficulties are overcome by the present invention which employs a low impedance resonant line for the "single-signal" filter. By means of my resonant line filter, I thus obtain a low impedance at the desired operating frequency, and an extremely sharp resonance characteristic. My filter thus functions to pass certain desired frequencies and to eliminate undesired frequencies. Furthermore, I am able to obtain a control in the degree of selectivity which is not possible to attain by the use of crystals, as heretofore employed.

A better understanding of the invention may be had by referring to the accompanying drawing, given by way of example only, wherein:

Figs. 1 and 2 illustrate the invention as applied to a superheterodyne receiving circuit, the filter being shown as a one-quarter wavelength two-wire resonant line; Fig. 3 illustrates the invention employing a one-half wavelength resonant line; and Fig. 4 illustrates my invention employing a concentric line one-quarter wavelength long as a "single-signal" filter. Both Figs. 3 and 4 are fragmentary views of the portion of the circuit located between the vertical dotted lines $x$—$x$ of Fig. 1.

The same parts have been labeled by the same reference characters throughout the figures of the drawing.

Referring to Fig. 1, I have shown only that portion of a superheterodyne receiver which is necessary for an understanding of my invention. My "single-signal" filter is shown as a quarter wavelength resonant line Z located between the first detector stage 1 and the first intermediate radio frequency stage 2. The output circuit of the detector comprises an inductance coil $L_1$ which is coupled to a balanced circuit comprising an inductance coil $L_2$ having in shunt therewith a unicontrolled condenser arrangement $C_2$ whose center is grounded. Resonant line Z is open circuited at one end so as to provide a low impedance at its other end, across which is connected a condenser $C_3$ of small capacity. Shunt capacitance $C_3$ combined with the resonant line Z functions as a "single-signal" filter to give an anti-resonant point at undesired frequencies. One terminal of the resonant line located at the portion across which the shunt capacity $C_3$ is connected, connects with one side of the balanced circuit $L_2C_2$. The other terminal of the resonant line Z is connected through a variable phasing capacitor $C_4$ to the other side of the balanced circuit $L_2C_2$. The phasing condenser $C_4$ serves to apply a neutralizing voltage from the balanced circuit $L_2C_2$ in order to neutralize or balance the voltage passing from the balanced circuit through $C_3$, so as to eliminate the anti-resonant

point when both condensers $C_3$ and $C_4$ are equal. If the value of $C_4$ is less than that of $C_3$, the anti-resonant frequency is above the resonance of the "single-signal" filter comprising the resonant line Z. If $C_4$ has a greater capacity than $C_3$, the anti-resonant point is below resonance. When $C_3$ and $C_4$ are equal in value, the circuit is practically neutralized, thus making the resonance characteristics of the filter nearly symmetrical. By a proper choice of values for condensers $C_3$ and $C_4$, any frequency in a band extending over a limited range on either side of the resonance point on the line Z may be rejected while the resonance frequency is passed. The sharpness of the resonance curve may be altered by adjusting $L_2C_2$. This adjustment of $L_2C_2$ operates to vary the amount of resistance in series with the resonant line Z. The "single-signal" filter is shown connected from terminal A to the input or control grid electrode of the first intermediate frequency stage 2. If desired, the resistance in series with the resonant line may be further decreased by employing a choke coil in place of the resistor R shown in the drawing.

Fig. 2 is a modification of the circuit of Fig. 1, and shows a transformer connected between the resonant line Z and the grid of the first intermediate frequency tube 2. The primary $L_3$ of the transformer has a low impedance while the secondary $L_4$, which is tuned by a condenser $C_5$, has a high impedance. This arrangement gives a low resistance in series with the resonant line Z, so that the selectivity of the filter is not cut down, and puts an increased voltage on the grid of the following amplifier tube 2. In other words, there is obtained a better impedance match between the "single-signal" filter and the first intermediate frequency stage.

If desired, the quarter wavelength resonant line of Figs. 1 and 2 may be replaced by a one-half wavelength resonant line. Such an arrangement is shown in Fig. 3, which merely illustrates that portion of the circuit which may be inserted between vertical dotted lines $x$—$x$ of Fig. 1. In Fig. 3 the one-half wavelength resonant line Z' is short circuited at one end while the open end is shunted by condenser $C_3$ in the same manner as the "single-signal" filter Z of Figs. 1 and 2. In this Fig. 3, as in the other figures, there is a low impedance for the desired frequency at the terminals of the "single-signal" filter.

Fig. 4 shows an arrangement like that of Figs. 1 and 2, wherein a quarter wavelength section of concentric line is used as a resonant line instead of the two-wire type shown in Figs. 1 and 2. Here again, only that portion of the circuit which may be inserted between the vertical dotted lines $x$—$x$ of Fig. 1 is shown, since only this portion is necessary for an understanding of this modification. The conductors of the concentric line of Fig. 4 are open at both ends, the terminals at one end being shunted by a condenser $L_3$. The principles of operation are the same as those described above in connection with the other figures.

One advantage of the present invention is that by using the resonant line combined with the parallel-connected capacity $C_3$ and the phasing capacity $C_4$, I can obtain a shift in the anti-resonant frequency point in a manner not possible of attainment when using crystals, as heretofore employed.

It should be understood that the invention is not limited to the particular arrangements illustrated and described, since various modifications may be made without departing from the spirit and scope of the invention. For example, wherever a two-wire line is shown, I can employ a section of concentric transmission line so that, if desired, the one-half wavelength line of Fig. 3 may be replaced by a similar length section of concentric line, in the same manner that the two-wire resonant line of Figs. 1 and 2 may be replaced by the concentric line shown in Fig. 4.

What is claimed is:

1. In a high frequency filter arrangement, a two-conductor resonant line at least one-quarter of a wavelength long, a small capacity connected in parallel thereto, a circuit balanced with respect to ground and having one side connected to one terminal of said resonant line, the opposite side of said balanced circuit being connected through a small variable phasing capacity to the other terminal of said resonant line, means coupling said last terminal to the input of a radio frequency amplifier stage, the combination of said resonant line, parallel capacity, and said phasing capacity acting to eliminate undesired frequencies tending to pass therethrough.

2. In a superheterodyne receiver, a two-conductor resonant line at least one-quarter of a wavelength long, a small capacity connected in parallel thereto at one end of said line, a first detector stage having a balanced circuit coupled to the output thereof, a connection from one side of said balanced circuit to one terminal of said resonant line at said one end, a capacitive connection from the other side of said balanced circuit to the other terminal of said resonant line at said one end, a radio frequency amplifier stage, a connection from said last terminal to the input of said amplifier stage, the combination of said resonant line and said parallel capacity and said capacitive connection acting to pass desired frequencies and eliminate undesired frequencies tending to pass therethrough.

3. In a superheterodyne receiver, a two-conductor resonant line at least one-quarter of the wavelength long, a small capacity connection in parallel thereto, a first detector stage having a balanced circuit coupled to the output thereof, said balanced circuit comprising an inductance coil having in shunt thereto a condenser arrangement grounded at its center, a connection from one side of said balanced circuit to one terminal of said resonant line, a capacitive connection from the other side of said balanced circuit to the other terminal of said resonant line, a radio frequency amplifier stage, means coupling said last terminal to the input of said amplifier stage, the combination of said resonant line and said parallel capacity and said capacitive connection acting to pass desired frequencies and eliminate undesired frequencies tending to pass therethrough.

4. In a superheterodyne receiver, a two-conductor resonant line at least one-quarter of the wavelength long, a small capacity connected in parallel thereto, a first detector stage having a balanced circuit coupled to the output thereof, a connection from one side of said balanced circuit to one terminal of said resonant line, a capacitive connection from the other side of said balanced circuit to the other terminal of said resonant line, an intermediate radio frequency stage having an input electrode, a connection from said last terminal to the input electrode of said intermediate frequency stage, the combination of said resonant line and said parallel capacity and said capacitive connection acting to eliminate undesired frequencies tending to pass therethrough.

5. In a superheterodyne receiver, a two-conductor resonant line one-quarter of a wavelength long, said line being open at both ends, a small capacity connected in parallel to one end of said line, a first detector stage having a balanced circuit coupled to the output thereof, a connection from one side of said balanced circuit to one terminal of said resonant line at said one end, a capacitive connection from the other side of said balanced circuit to the other terminal of said resonant line at said one end, a radio frequency amplifier stage, means coupling said last terminal to the input of said amplifier stage, said combination of resonant line and said parallel capacity and said capacitive connection acting to eliminate undesired frequencies tending to pass therethrough.

6. A system as defined in claim 5, characterized in this that said resonant line comprises two parallel wires.

7. A system as defined in claim 5, characterized in this that said resonant line comprises a section of concentric line.

8. In a superheterodyne receiver, a two-conductor resonant line one-half wavelength long open at one end and short-circuited at the other end, a small capacity connected in parallel to said line at the open end thereof, a circuit balanced with respect to ground, a connection from one side of said balanced circuit to one terminal of said line located at the open end thereof, a connection including a phasing capacity from the other side of said balanced circuit to the other terminal of said line also located at the open end, means including said last terminal to the input of a radio frequency amplifier stage, said combination of resonant line, parallel capacity, and said phasing capacity acting to eliminate undesired frequencies tending to pass therethrough.

9. In a multi-stage superheterodyne receiver, means for eliminating image signals, whereby signals are heard on only one side of the zero beat, comprising a two-conductor resonant line one-quarter of a wavelength long, said line being open at both ends, a capacity connected in parallel to one end of said line, a first detector stage having a balanced circuit coupled to the output thereof, a connection from one side of said balanced circuit to one terminal of said resonant line at said one end, a capacitive connection from the other side of said balanced circuit to the other terminal of said resonant line at said one end, a radio frequency amplifier stage, means coupling said last terminal to the input of said amplifier stage, said combination of resonant line and said parallel capacity and said capacitive connection acting to eliminate undesired frequencies tending to pass therethrough and to pass certain desired frequencies.

10. In a multi-stage superheterodyne receiver, means for eliminating image signals, whereby signals are heard on only one side of the zero beat, comprising a two-conductor resonant line one-quarter of a wavelength long, said line being open at both ends, a capacity connected in parallel to one end of said line, a first detector stage having a balanced circuit coupled to the output thereof, a connection from one side of said balanced circuit to one terminal of said resonant line at said one end, a capacitive connection from the other side of said balanced circuit to the other terminal of said resonant line at said one end, a radio frequency amplifier stage, a transformer coupling said last terminal to the input of said amplifier stage, said transformer having a primary winding of low impedance coupled to said resonant line and a secondary winding of high impedance coupled to the input of said amplifier stage, said combination of resonant line and said parallel capacity and said capacitive connection acting to eliminate undesired frequencies tending to pass therethrough, and to pass certain desired frequencies.

ARTHUR M. BRAATEN.