(12) INTERNATIONAL APPLICATION PUBLISHED UNDER THE PATENT COOPERATION TREATY (PCT)

(19) World Intellectual Property Organization
International Bureau

(43) International Publication Date
12 August 2004 (12.08.2004)

PCT

(10) International Publication Number
WO 2004/067352 A1

(51) International Patent Classification[7]: B62B 7/12, B62K 13/00, 9/00

(21) International Application Number: PCT/GB2004/000257

(22) International Filing Date: 22 January 2004 (22.01.2004)

(25) Filing Language: English

(26) Publication Language: English

(30) Priority Data:
0301781.1 25 January 2003 (25.01.2003) GB
0318367.0 6 August 2003 (06.08.2003) GB

(71) Applicant and
(72) Inventor: LAND, Graeme [GB/GB]; 10 Etherley Grange, Bishop Auckland, Co Durham DL14 OJZ (GB).

(74) Agent: Murgitroyd & Company; 165-169 Scotland Street, Glasgow G5 8PL (GB).

(81) Designated States *(unless otherwise indicated, for every kind of national protection available)*: AE, AG, AL, AM, AT, AU, AZ, BA, BB, BG, BR, BW, BY, BZ, CA, CH, CN, CO, CR, CU, CZ, DE, DK, DM, DZ, EC, EE, EG, ES, FI, GB, GD, GE, GH, GM, HR, HU, ID, IL, IN, IS, JP, KE, KG, KP, KR, KZ, LC, LK, LR, LS, LT, LU, LV, MA, MD, MG, MK, MN, MW, MX, MZ, NA, NI, NO, NZ, OM, PG, PH, PL, PT, RO, RU, SC, SD, SE, SG, SK, SL, SY, TJ, TM, TN, TR, TT, TZ, UA, UG, US, UZ, VC, VN, YU, ZA, ZM, ZW.

(84) Designated States *(unless otherwise indicated, for every kind of regional protection available)*: ARIPO (BW, GH, GM, KE, LS, MW, MZ, SD, SL, SZ, TZ, UG, ZM, ZW), Eurasian (AM, AZ, BY, KG, KZ, MD, RU, TJ, TM), European (AT, BE, BG, CH, CY, CZ, DE, DK, EE, ES, FI, FR, GB, GR, HU, IE, IT, LU, MC, NL, PT, RO, SE, SI, SK, TR), OAPI (BF, BJ, CF, CG, CI, CM, GA, GN, GQ, GW, ML, MR, NE, SN, TD, TG).

[Continued on next page]

(54) Title: INFANT CARRIAGE CONVERTIBLE FOR USE AS RIDER OPERATED TRANSPORT

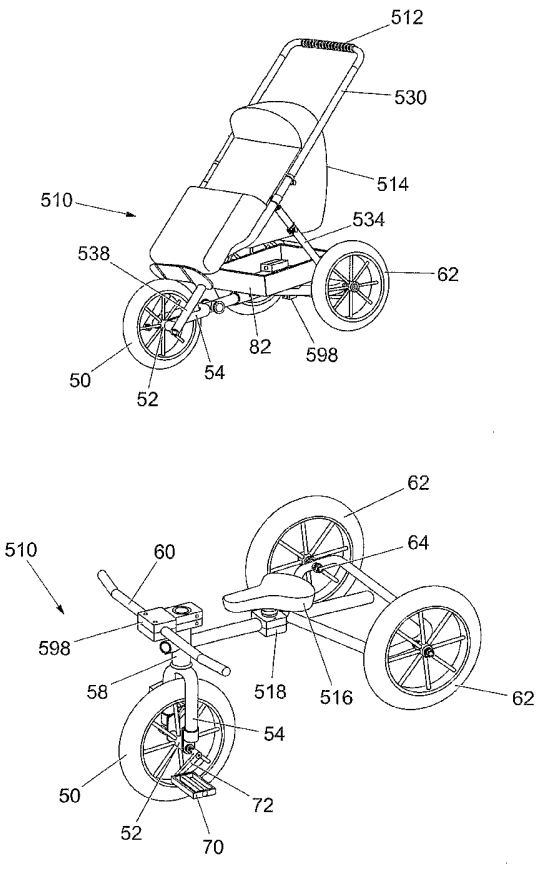

(57) Abstract: An infant carriage (410) is configurable to operate in two modes, a pushing mode in which a person can push an infant seated in an infant seat (514), and a riding mode in which a child can ride the carriage as a rider operated transport, such as a tricycle, to extend the useful life of an infant carriage. The infant carriage (410) includes wheels (50, 62) mounted on a chassis frame (520); a support frame (530) with pushing handle (512) detachably mountable on the chassis frame, a detachable infant seat (514) on the support frame; a rider seat (516) detachably mountable on the chassis frame; drive means such as pedals (70) detachably mountable to drive a wheel; and detachable steering means (60). In the pushing mode the support frame (530) and infant seat (514) are mounted on the chassis frame (520), while the rider seat (516), drive means (70) and steering means (60) can be removed from the chassis frame. In the riding mode the rider seat (516), drive means (70) and steering means (60) are mounted on the chassis frame (520), while the support frame (530) and infant seat (514) are removed from the chassis frame.

WO 2004/067352 A1

Published:
— *with international search report*

For two-letter codes and other abbreviations, refer to the "Guidance Notes on Codes and Abbreviations" appearing at the beginning of each regular issue of the PCT Gazette.

Infant carriage convertible for use as rider operated transport

This invention relates to an infant carriage, such as a pushchair, pram, buggy, stroller or the like, which can be converted for use as a child's rider operated transport, such as a tricycle or go-kart.

The term pushchair is used herein to refer to an infant carriage which is used to convey an infant or young child by a person pushing or pulling on a handle, including a pram, buggy or stroller. The purchase of a pushchair often represents a significant purchase for a parent, and the useful life of the pushchair can be relatively short. Once a child has outgrown the pushchair or is capable of walking independently the pushchair has no further use. Since many of the functioning parts of the pushchair, such as the wheels, frame, suspension, brake system, will still be in good working order, this represents a significant waste.

DE 42 11 329 A1 discloses a child's pedal tractor which can be converted into a simple buggy. However the buggy serves merely as a toy, and when the tractor is converted into a buggy it does not offer the safety features expected of a child's pushchair.

It is an object of the present invention to provide a pushchair which can be converted safely for use as a child's rider operated transport, and back again.

According to the invention there is provided an infant carriage comprising:

at least three wheels mounted on a chassis frame;

a support frame detachably mountable on the chassis frame and comprising a pushing handle;

an infant seat supported by said support frame;

a rider seat detachably mountable on the chassis frame;

drive means detachably mountable to drive at least one of said wheels and operable by an operator on the rider seat; and

steering means detachably mountable to steer at least one of said wheels and operable by an operator on the rider seat.

Preferably the infant carriage can be configured to operate in two modes, a pushing mode and a riding mode. Preferably in the pushing mode the support frame and infant seat are mounted on the chassis frame and the rider seat, drive means and steering means are removed from the chassis frame.

Preferably in the riding mode the support frame and infant seat are removed from the chassis frame and the rider seat, drive means and steering means are mounted on the chassis frame.

The infant carriage may further comprise a hood or cover detachably mountable to the support frame or to the infant seat. The infant carriage may further comprise a foot muff detachably mountable to the support frame or to the infant seat. The foot muff may be electrically heated.

The infant carriage may further comprise a carrying means detachably mountable to the chassis frame or support frame. The carrying means may be a wire basket, box, bag or the like.

Preferably the rider seat comprises height and/or position adjusting means.

According to a first aspect of the invention the infant carriage comprises a front wheel and two rear wheels.

Preferably the front wheel is connected to a fork tube which is pivotally mounted to the chassis frame. Preferably the steering means comprises a handle bar detachably mountable to the fork tube to steer the front wheel.

The chassis frame may comprise a Y frame of tubular members, the fork tube being mounted at the leg of

the Y and each of the two rear wheels being positioned at an arm of the Y.

Preferably the chassis frame is adjustable in length.

In one preferred embodiment the front wheel is connected to a fork tube and the chassis frame includes a fork tube connector which allows connection of the fork tube in two modes, a first mode in which the fork tube is restrained from rotation with respect to the chassis frame and in which the carriage is operated in the pushing mode, and a second mode in which the fork tube is free to rotate with respect to the chassis frame to permit steering of the front wheel and in which the carriage is operated in the riding mode.

Preferably the chassis frame includes a triangular frame adapted to support the rear wheels and a telescopically adjustable leg portion extending towards the front wheel. The leg portion may be provided with an adjustable connector adapted to allow connection of the fork tube in two modes, a first mode in which the fork tube is an extension of the leg portion and a second mode in which the fork tube extends substantially perpendicular to the leg portion and is free to pivot with respect to the leg portion.

The support frame may comprise a substantially triangular frame of tubular members detachably

mountable on the chassis frame at or near the fork tube, the base of the triangle forming the pushing handle. Alternatively the support frame may comprise a frame adapted to hold an infant seat and having two projecting legs adapted to connect to the front wheel axle. In a preferred embodiment the support frame and the fork tube are both connected to the axle of the front wheel.

Preferably the support frame further comprises one or more rear support members detachably mountable on the chassis frame at or near the rear wheels.

In a first preferred embodiment the drive means comprises pedals detachably mountable to the front wheel. The pedals may be connected to the front wheel by means of a crank shaft rotatably connected to the front wheel.

In a second preferred embodiment the rider seat comprises a saddle provided on a seat mounting frame detachably mountable to the chassis frame. The drive means comprises a crank and pedals rotatably mounted to the seat mounting frame and a chain drivably connectable to a sprocket rotatably coupled to at least one of the rear wheels.

Preferably the seat mounting frame is adjustable in position to allow adjustment of the tension of the chain.

Preferably the infant carriage further comprises a rear brake mechanism. The rear brake mechanism may comprise a rear brake mounted at one or both rear wheels, a rear brake lever mountable on the pushing handle or the handlebar and a cable extending between the rear brake and the rear brake lever.

Preferably the infant carriage further comprises a detachably mountable front brake mechanism. The front brake mechanism may comprise a detachably mountable front brake at the front wheel, a front brake lever detachably mountable on the handlebar and a cable extending between the front brake and the front brake lever.

In a third preferred embodiment the drive means comprises an electric motor and a transmission means which drivably couples the electric motor and at least one of the wheels. Preferably the infant carriage further comprises a rechargeable power cell or battery for powering the electric motor. The motor and transmission means may be adapted to be mountable to the chassis frame when the infant carriage is in the pushing mode, such that a person pushing the carriage may operate the drive means to drive at least one of the wheels.

Preferably the infant carriage further comprises a detachably mountable throttle control adapted to control the operation of the electric motor and detachably mountable on the handlebar or the pushing handle. Preferably the infant carriage further

comprises a control cable extending between the throttle control and the electric motor. The throttle control may comprise a throttle lever, twist grip, handle, electronic control or the like.

According to a second aspect of the invention the infant carriage comprises at least two front wheels and at least two rear wheels.

Preferably the front wheels are rotatably supported by a front wheel support frame mounted to the chassis frame. The front wheel support frame may be a front axle. Preferably the steering means comprises a steering wheel and steering column adapted to steer the front wheels. Any known go-kart or pedal cart steering mechanism may be used. Preferably the infant carriage further comprises a steering locking means to permit the front wheels to be steerably locked when the infant carriage is in the pushing mode.

Preferably the chassis frame comprises a Y frame of tubular members, the front wheel support frame being mounted at the leg of the Y and each of the two rear wheels being positioned at an arm of the Y.

Preferably the chassis frame further comprises a rider seat frame adapted to support the rider seat. Preferably the support frame comprises a frame of tubular members detachably mountable on the chassis frame at or near the rider seat frame. Preferably the support frame further comprises one or more rear

support members detachably mountable on the chassis frame at or near the rear wheels.

Preferably the infant carriage further comprises a rear brake mechanism. The rear brake mechanism may comprise a rear brake mounted at one or both rear wheels, a rear brake lever mounted on the chassis frame or rider seat frame and a cable extending between the rear brake and the rear brake lever.

In a fourth preferred embodiment the drive means comprises a crank and pedals rotatably mounted to the chassis frame and a chain drivably connectable to a sprocket rotatably coupled to at least one of the rear wheels.

Preferably the crank is adjustable in position to allow adjustment of the tension of the chain.

In a fifth preferred embodiment the drive means comprises an electric motor and a transmission means which drivably couples the electric motor and at least one of the rear wheels. Preferably the infant carriage further comprises a rechargeable power cell or battery for powering the electric motor. The motor and transmission means may be adapted to be mountable to the chassis frame when the infant carriage is in the pushing mode, such that a person pushing the carriage may operate the drive means to drive at least one of the wheels.

Preferably the infant carriage further comprises a detachably mountable throttle control adapted to control the operation of the electric motor and detachably mountable on the steering column or the pushing handle. Preferably the infant carriage further comprises a control cable extending between the throttle control and the electric motor. The throttle control may comprise a throttle lever, twist grip, handle, electronic control or the like.

Examples of the invention, which are not limiting, will now be described with reference to the following Figures in which:

Fig. 1 shows a side view of a pedal operated three wheeled infant carriage according to a first embodiment of the invention in the pushing mode;

Fig. 2 shows a side view of the infant carriage of Fig. 1 in the riding mode;

Fig. 3 shows a plan view of the infant carriage of Fig. 1 in the pushing mode;

Fig. 4 shows a plan view of the infant carriage of Fig. 1 in the riding mode;

Fig. 5 shows a side view of a pedal operated three wheeled infant carriage according to a second embodiment of the invention in the pushing mode;

Fig. 6 shows a side view of the infant carriage of Fig. 5 in the riding mode;

Fig. 7 shows a side view of an electrically powered three wheeled infant carriage according to a third embodiment of the invention in the pushing mode;

Fig. 8 shows a side view of the infant carriage of Fig. 7 in the riding mode;

Fig. 9 shows a side view of a pedal operated four wheeled infant carriage according to a fourth embodiment of the invention in the pushing mode;

Fig. 10 shows a perspective view of the infant carriage of Fig. 9 in the riding mode;

Fig. 11 shows a plan view of the infant carriage of Fig. 9 in the riding mode;

Fig. 12 shows a side view of an electrically powered four wheeled infant carriage according to a fifth embodiment of the invention in the pushing mode;

Fig. 13 shows a perspective view of the infant carriage of Fig. 12 in the riding mode; and

Fig. 14 shows a plan view of the infant carriage of Fig. 12 in the riding mode.

Fig. 15 shows a perspective view of a three wheeled infant carriage according to a sixth embodiment of the invention in the pushing mode;

Fig. 16 shows a perspective view of the infant carriage of Fig. 15 in the pushing mode with the seat and carrying tray omitted for clarity;

Fig. 17 shows a perspective view of the infant carriage of Fig. 15 in the riding mode; and

Fig. 18 shows a perspective view of the chassis frame of the infant carriage of Fig. 15.

Referring to Figs. 1 to 4 there is shown an infant carriage 10 which can be converted between two modes of operation, a pushing mode shown in Figs. 1 and 3 in which an operator can push the carriage 10 using pushing handle 12 to transport an infant in the infant seat 14, and a riding mode shown in Figs. 2 and 4 in which a child can sit on the rider seat 16 and use the carriage 10 as a tricycle.

The infant carriage 10 has a chassis frame 20 comprising a Y-frame and an axle member 22 extending between the arms 24 of the Y-frame. Other shapes of chassis frame are possible. A front wheel 50 is rotatably mounted on a front hub 52 which is carried by front forks 54. The front forks 54 are connected to a shaft 56 which is rotatably held by bearings, bushing or other means in a fork tube 58 in the conventional manner and which extends above the fork

tube 58 to allow connection of a detachable handlebar 60 for steering the front wheel 50 in the riding mode. A steering lock (not shown) may be provided to lock the shaft 56 so that the front wheel 50 cannot turn when the carriage is in the pushing mode.

The fork tube 58 is fixed to the chassis frame 20 at the leg of the Y-frame. Each of the two rear wheels 62 is supported for free rotation at an arm of the Y-frame. An axle (not shown) may link the two rear wheels 62, or each rear wheel 62 may be independently supported on a corresponding rear wheel hub 64.

A support frame 30 is detachably mountable to the chassis frame at connection points 32. The pushing handle 12 forms part of the support frame 30, which in this embodiment is substantially triangular, although other shapes are envisaged. The support frame 30 also includes two rear support members 34. Any suitable form of detachable mounting may be used, such as bolted connections, threaded fasteners, spring loaded detents or the like.

The infant seat 14 is carried by the support frame 30. The connection to the support frame 30 can be permanent, or the infant seat 14 may be releasably connected by any suitable means to the support frame 30, so that the infant may be carried away from the carriage 10 on the seat 14. A handle (not shown) may be provided on the infant seat 14.

The rider seat 16 is in the form of a saddle 40 detachably mounted on a saddle post 42 to a connection point 44 on the chassis frame 20. The connection point 44 may include a sleeve and clamping member which holds the saddle post 42 in a clamped position. The rider seat 16 may include conventional saddle height adjustment means, such as a tube clamped within a sleeve. Position adjusting means may also be provided, to adjust the position forwards or backwards, if required, for example by providing a plurality of connection points 44 on the chassis frame 20, or by using any suitable method of adjustable connection, such as the connection points 144 illustrated in Figs. 5 and 6.

The drive means is in the form of two pedals 70 detachably mountable to the front wheel 50. The pedals 70 can each be connected by a crankshaft 72 to the central shaft (not shown) of the front hub 52, by any suitable means. Alternatively the front wheel 50 may have a solid web instead of spokes (as illustrated), and the pedals 70 can be detachably mounted to offset support points (not shown) on the web of the wheel.

The infant carriage has a detachable hood or rain cover 80 which is detachably mountable in a conventional manner to the support frame 30 or to the infant seat 14, for example by clips or sping loaded fasteners. The hood 80 may be foldable. A foot muff (not shown) may be provided, again

detachably mountable to the support frame or to the infant seat.

A carrier 82 such as a wire basket, box, bag or the like may be removably attached to the chassis frame 20 or to another part of the carriage 10. The carrier may be used in both the pushing and riding modes.

In use the infant carriage 10 can be converted from the pushing mode shown in Fig. 1 to the riding mode shown in Fig. 2 by removing the support frame 30, together with infant seat 14 and hood 80, from the chassis frame 20. The rider seat 16, pedals 70, with crankshaft 72 if necessary, and handlebar 60 are then secured to the chassis frame 20, to form a tricycle which can be ridden by a child. A different carrier 82 can be attached to the chassis frame 20, if required, for example to form a lorry type tricycle toy. To convert back to the pushing mode, these steps are reversed.

Referring to Figs. 5 and 6 there is shown a second embodiment of an infant carriage 110 which can be converted between pushing and riding modes of operation. The same reference numerals are used to denote the same components, and these will not be further described. Fig. 5 shows the infant carriage 110 in the pushing mode, in which an operator can push the carriage 110 using pushing handle 12 to transport an infant in the infant seat 14. Fig. 6 shows the infant carriage 110 in the riding mode, in

which a child can sit on the rider seat 16 and use the carriage 110 as a tricycle.

The rider seat 16 is in the form of a saddle 140 detachably mounted on a seat mounting frame or saddle post 142 to one of a plurality of connection points 144 on the chassis frame 20. The rider seat may include conventional saddle height adjustment means. The saddle post 142 projects below the chassis frame 20. At the lower end of the saddle post 142 there is provided a crank wheel 146 mounted on a hub bearing (not shown). The seat mounting frame may take a different form, and is not limited to a single saddle post 142. The drive means is in the form of two pedals 148 connected in a conventional manner to the crank wheel 146, which drives a drive chain 170, which in turn drives a sprocket 172 at the rear wheel 62.

The drive chain 170 has a separable link (not shown) to facilitate assembly and removal of the chain from the sprocket 172 and crank wheel 146. Alternatively the sprocket 172 may be provided at the free end of a stub axle (not shown) connected to one of the rear wheels 62 so that a loop of the chain 170 may be easily engaged with the sprocket 172. The saddle post may be provided with tilting adjustment means, for example slotted holes which engage with bolts or threaded fasteners passing through the connection points 144, so that the tension in the drive chain 170 may be adjusted. Other known forms of chain tension adjustment may also be used.

Although the illustrated embodiment does not show a transmission or gear changing means, it is to be understood that a bicycle or tricycle type transmission may be used with the carriage of the invention.

The infant carriage 110 has a rear brake mechanism which can be used in both the pushing and riding modes. A rear brake lever 90 is fastened to either the pushing handle 12 or the handlebar 60. A rear brake 94, shown schematically in Figs. 5 and 6, is provided to operate on one or both of the rear wheels 62. The rear brake 94 may be a hub brake, a disc brake, a rim operating brake or any other suitable brake. A rear brake cable 92 links the rear brake lever 90 and the rear brake 94, and is connected to the frame of the infant carriage by cable connectors 96.

The infant carriage 110 also has a front brake mechanism, comprising a front brake lever 91 mounted on the handlebar 60, a front brake 98 which may be a caliper brake or other rim operating brake, and a front brake cable 93 linking the front brake lever 91 and the front brake 98. The infant carriage 110 may be provided with only one of the front and rear brake mechanisms if required.

In use the infant carriage 110 can be converted from the pushing mode shown in Fig. 5 to the riding mode shown in Fig. 6 by disconnecting the rear brake lever 90 and rear brake cable 92 from the support

frame 30 and removing the support frame 30, together with infant seat 14 and hood 80, from the chassis frame 20. The saddle post 142 with attachments is then secured to the chassis frame 20 and the drive chain 170 is placed around the crank wheel 146 and sprocket 172. The handlebar 60 is secured to the chassis frame 20, the front brake (if required) is attached to the front forks 54, the brake levers 90, 91 are attached to the handlebar 60 and the brake cables 92, 93 are attached to the chassis frame 20 and handlebar 60. The carriage thus forms a tricycle which can be ridden by a child. To convert back to the pushing mode, these steps are reversed.

Referring to Figs. 7 and 8 there is shown a third embodiment of an infant carriage 210 which can be converted between pushing and riding modes of operation. The same reference numerals are used to denote the same components described with reference to Figs. 1 to 6, and these will not be further described. Fig. 7 shows the infant carriage 210 in the pushing mode, in which an operator can push the carriage 210 using pushing handle 12 to transport an infant in the infant seat 14. Fig. 8 shows the infant carriage 210 in the riding mode, in which a child can sit on the rider seat 16 and use the carriage 210 as a tricycle.

The drive means comprises an electric motor unit 226, shown schematically in Figs. 7 and 8. The motor unit 226 is powered by a rechargeable battery (not shown). A throttle control handle 220 is

provided on the pushing handle 12 or handlebar 60. The control handle 220 is connected to a control unit in the electric motor unit 226 by a control cable 222, which is secured to the support frame 30 or chassis frame 20 by cable connectors 224. The electric motor unit 226 includes a transmission to drive one or both rear wheels. The transmission may be single speed or variable speed, with the speed controlled by the control handle 220. It will be appreciated by the skilled person that any suitable motor unit 226 may be used, such as those known in the field of electric wheelchairs, electric scooters and the like.

Demountable footrests 228 are attached to the front forks 54 or the chassis frame 20, as appropriate. The footrests 228 may be adjustable in position, to allow for different sizes of riders. This may be in addition to providing a rider seat 40 with an adjustable height and/or position, as described above with reference to Figs. 1 to 3.

A front brake or rear brake mechanism may be provided, similar to the mechanisms shown in Figs. 5 and 6.

In use the electrically operated infant carriage 210 can be converted from the pushing mode shown in Fig. 7 to the riding mode shown in Fig. 8 by removing the support frame 30, together with infant seat 14 and hood 80, from the chassis frame 20. The rider seat 16, foot rests 228 and handlebar 60 are then secured

to the chassis frame 20, and the control handle 220 and control cable 222 are disconnected from the support frame 30 and reconnected to the handlebar 60 and chassis frame 20 to form an electric tricycle which can be ridden by a child. To convert back to the pushing mode, these steps are reversed.

Referring now to Figs. 9 to 11 there is shown in schematic form only a fourth embodiment of an infant carriage 310 which can be converted between two modes of operation, a pushing mode shown in Fig. 9 in which an operator can push the carriage 310 using pushing handle 312 to transport an infant in the infant seat 314, and a riding mode shown in Figs. 10 and 11 in which a child can sit on the rider seat 316 and use the carriage 310 as a pedal cart.

The infant carriage 310 has a chassis frame 320 generally comprising a Y-frame. It is to be understood that the size and position of frame members making up the chassis frame can be varied according to structural requirements. Other shapes of chassis frame are possible. Two front wheels 350 are rotatably mounted on a conventional steerable cart axle system 352 connected to the chassis frame 320. A steering lock (not shown) may be provided to lock the steering so that the front wheels 350 cannot turn when the carriage is in the pushing mode. In the riding mode a steering column 360 and steering wheel 362 are connected to the front axle system 352 and chassis frame 320 by demountable struts 364.

Two rear wheels 362 are mounted on an axle 364 connected to the chassis frame 320. The chassis frame includes a rider seat frame 322 fixed above the chassis frame 320.

A support frame 330 is detachably mountable to the chassis frame at connection points 332. The pushing handle 312 forms part of the support frame 330. The support frame 330 also includes two rear support members 334. Any suitable form of detachable mounting may be used, such as bolted connections, threaded fasteners, spring loaded detents or the like.

The infant seat 314 is carried by the support frame 330. The connection to the support frame 330 can be permanent, or the infant seat 314 may be releasably connected by any suitable means to the support frame 330, so that the infant may be carried away from the carriage 310 on the seat 314. A handle (not shown) may be provided on the infant seat 314 to facilitate lifting.

The rider seat 316 is detachably mountable to the rider seat frame 322 and is provided with a seat back 340. The rider seat 316 may include position adjusting means (not shown), to adjust the position forwards or backwards, if required, for example by providing a plurality of connection points on the rider sear frame 322.

A crank wheel 346 mounted on a hub bearing (not shown) on the chassis frame 320. The drive means is in the form of two pedals 348 detachably mounted to the crank wheel 346, which drives a drive chain 370, which in turn drives a sprocket 372 at the rear wheel axle 320.

The crank wheel 346 and drive chain 370 may be left in place in both the pushing and riding modes, or the drive chain 370 may have a separable link (not shown) to facilitate assembly and removal of the chain 370 and crank wheel 346. The position of the crank wheel 346 may be adjustable to facilitate chain tension adjustment.

Although the illustrated embodiment does not show a transmission or gear changing means, it is to be understood that a standard cart or bicycle type transmission may be used with the carriage of the invention.

The infant carriage has a detachable hood or rain cover 380 which is detachably mountable in a conventional manner to the support frame 330 or to the infant seat 314, for example by clips or spring loaded fasteners. The hood 380 may be foldable. A foot muff 384 may be provided, again detachably mountable to the support frame 330 or to the infant seat 314.

A carrier (not shown) such as a wire basket, box, bag or the like may be removably attached to the rider seat frame 322 in the pushing mode.

The infant carriage 310 has a rear brake mechanism which can be used in both the pushing and riding modes. A rear brake lever 390 is fastened to the rider seat frame 322. A rear brake 394, shown schematically in Fig. 9, is provided to operate on one or both of the rear wheels 362. The rear brake 394 may be a hub brake, a disc brake, a rim operating brake or any other suitable brake. A rear brake cable 392 links the rear brake lever 390 and the rear brake 394.

In use the infant carriage 310 can be converted from the pushing mode shown in Fig. 9 to the riding mode shown in Fig. 10 by removing the support frame 330, together with infant seat 314, hood 380 and foot muff 384, from the chassis frame 320. The steering column 360, rider seat 16 and pedals 348, with crank wheel 346 and chain 370 if necessary, are then secured to the chassis frame 320, to form a pedal cart which can be ridden by a child. To convert back to the pushing mode, these steps are reversed.

Referring to Figs. 12 to 14 there is shown schematically a fifth embodiment of an infant carriage 410 which can be converted between pushing and riding modes of operation. The same reference numerals are used to denote the same components described with reference to Figs. 9 to 11, and these

will not be further described. Fig. 12 shows the infant carriage 410 in the pushing mode, in which an operator can push the carriage 410 using pushing handle 312 to transport an infant in the infant seat 314. Figs. 13 and 14 show the infant carriage 410 in the riding mode, in which a child can sit on the rider seat 316 and use the carriage 410 as a pedal cart.

The drive means comprises an electric motor unit 426, shown schematically in Figs. 12 to 14. The motor unit 426 is powered by a rechargeable battery (not shown). A throttle control or control handle 420 is provided on the pushing handle 312 or steering column 360. The control handle 420 is connected to a control unit in the electric motor unit 426 by a control cable 422, which is secured to the support frame 330 or chassis frame 320 by cable connectors (not shown). The electric motor unit 426 includes a transmission to drive one or both rear wheels. The transmission may be single speed or variable speed, with the speed controlled by the control handle 420. It will be appreciated by the skilled person that any suitable motor unit 426 may be used, such as those known in the field of electric wheelchairs, electric scooters and the like. The battery can be used to power other electrical items such as lights (not shown) or a heating element in the foot muff 384.

Demountable footrests 428 are attached to the chassis frame 320.

In use the electrically operated infant carriage 410 can be converted from the pushing mode shown in Fig. 12 to the riding mode shown in Figs. 13 and 14 by removing the support frame 330, together with infant seat 314, hood 380 and foot muff 384, from the chassis frame 320. The steering column 360 and rider seat 316 are then secured to the chassis frame 320, and the control handle 420 and control cable 422 are disconnected from the support frame 330 and reconnected to the steering column 360 and chassis frame 320 to form an electric go-kart which can be ridden by a child. To convert back to the pushing mode, these steps are reversed.

Referring to Figs. 15 to 18 there is shown schematically a sixth embodiment of an infant carriage 510 which can be converted between pushing and riding modes of operation. The same reference numerals are used to denote the same components described with reference to Figs. 1 to 4, and these will not be further described. Figs. 15 and 16 show the infant carriage 510 in the pushing mode, in which an operator can push the carriage 510 using pushing handle 512 to transport an infant in the infant seat 514. Fig. 17 shows the infant carriage 510 in the riding mode, in which a child can sit on the rider seat 516 and use the carriage 510 as a tricycle.

Fig. 18 shows the chassis frame 520 in its three constituent parts, the front forks 54 and shaft 56,

the central leg 590, and the triangular frame 592. A telescopic connection 594 enables the leg 590 and triangular frame 592 to be connected at different relative positions so that the chassis frame 520 has a reduced length in the riding mode and an increased length in the pushing mode. The telescopic connection 594 is provided with a locking means (not shown) so that the chassis frame is lockable in the increased or reduced length configuration. In the riding mode the leg 590 extends into the space within the triangular frame (see Fig. 17). The telescopic connection overcomes the problem that a tricycle requires a shorter wheelbase than a buggy, since the tricycle must be operable by a small child.

The leg 590 includes a fork tube 58 extending perpendicular to the leg. In the riding mode the front fork shaft 56 extends through the fork tube 58, while in the pushing mode the front fork shaft engages in the hollow end 596 of the leg 590. A suitable clamping means such as a locking pin (not shown) holds the front fork shaft 56 to the leg 590.

Screws (not shown) can be used to secure a basket 82 to the chassis frame 520, by engaging with pre-formed holes in the chassis frame. A clamp 518 is used to secure a seat in the form of a saddle 516 to the central leg 590 of the chassis frame 520. The clamp 518 may be secured at any of a number of positions, thereby allowing the position of the saddle 516 to be adjusted to suit the legs of the

rider. In this embodiment, as in others, the saddle 516 may remain in place in the pushing mode if it does not interfere with the infant seat 514. A clamp 598 is used to connect the handlebar 60 to the front fork shaft 56 in the riding mode. The clamp 598 can be fitted to the end of the leg 590 to keep the clamp 598 and handlebar 60 securely stowed beneath the basket 82 in the pushing mode, as seen in Fig. 15.

The drive means is in the form of two pedals 70 detachably mountable to the front wheel 50. The pedals 70 can each be connected by a crankshaft 72 to the central shaft (not shown) of the front hub 52, by any suitable means in the riding mode. In the pushing mode the cranks 72 are removed and replaced by the legs 538 of the support frame 530. The support frame legs 538 are spaced apart by a cross member 604. The cranks 72 and support frame legs 538 may be connected to the central shaft by any suitable means, for example Allen screws or the like.

The support frame 530 is further connected to the chassis frame 520 by two rear support members 534, similar to those described earlier. The support members 534 each have a telescoping portion 600 which allows adjustment of the angle of the support frame 530. The rear support members are braced by a horizontal frame member 602 to form a rear support frame 604. When the infant carriage is in the riding mode, the support frame 530 and rear support

frame 534, 600, 602 are removed together from the carriage and folded flat by pivoting about hinges 606.

The support frame has telescoping portions 608 which allow adjustment of the height of the handle 512.

Modifications and variations may be made to the embodiments described above without departing from the scope of the invention. In particular, different connectors may be used, different frame arrangements are envisaged and different drive means may be included. Features from one illustrated embodiment may be combined with features from another illustrated embodiment.

The invention provides an infant carriage which may be readily converted to a vehicle which may be ridden by a child, such as a tricycle or pedal cart, offering cost savings over the purchase of a separate infant carriage and tricycle.

CLAIMS

1. An infant carriage comprising:

a plurality of wheels mounted on a chassis frame;

a support frame detachably mountable on the chassis frame and comprising a pushing handle;

an infant seat supportable by said support frame;

a rider seat detachably mountable on the chassis frame;

drive means detachably mountable to drive at least one of said wheels and operable by an operator on the rider seat; and

steering means detachably mountable to steer at least one of said wheels and operable by an operator on the rider seat.

2. An infant carriage according to Claim 1, wherein the infant carriage is configurable to operate in two modes, a pushing mode in which the support frame and infant seat are mounted on the chassis frame and the rider seat, drive means and steering means are removed from the chassis frame, and a riding mode in which the support frame and infant seat are removed from the chassis frame and the rider seat, drive means and steering means are mounted on the chassis frame.

3. An infant carriage according to Claim 1 or 2, wherein the rider seat comprises height and/or position adjusting means.

4. An infant carriage according to any of Claims 1 to 3, wherein the infant carriage comprises a front wheel and two rear wheels.

5. An infant carriage according to Claim 4, wherein the front wheel is connected to a fork tube which is pivotally mounted to the chassis frame and the steering means comprises a handle bar detachably mountable to the fork tube to steer the front wheel.

6. An infant carriage according to Claim 4 or 5, wherein the chassis frame comprises a Y frame of tubular members, the fork tube being mounted at the leg of the Y and each of the two rear wheels being positioned at an arm of the Y.

7. An infant carriage according to Claim 4 or 5, wherein the chassis frame is adjustable in length.

8. An infant carriage according to Claim 7 when dependent on Claim 4, wherein the front wheel is connected to a fork tube and the chassis frame includes a fork tube connector which allows connection of the fork tube in two modes, a first mode in which the fork tube is restrained from rotation with respect to the chassis frame, and a second mode in which the fork tube is free to rotate with respect to the chassis frame to permit steering of the front wheel.

9. An infant carriage according to Claim 7 or 8, wherein the chassis frame includes a triangular frame adapted to support the rear wheels and a telescopically adjustable leg portion extending towards the front wheel.

10. An infant carriage according to Claim 9, wherein the leg portion is provided with an adjustable connector adapted to allow connection of the fork tube in two modes, a first mode in which the fork tube is an extension of the leg portion and a second mode in which the fork tube extends substantially perpendicular to the leg portion and is free to pivot with respect to the leg portion.

11. An infant carriage according to any of Claims 4 to 10, wherein the support frame comprises a substantially triangular frame of tubular members detachably mountable on the chassis frame at or near the fork tube, the base of the triangle forming the pushing handle.

12. An infant carriage according to any of Claims 4 to 10, wherein the support frame comprises a frame adapted to hold an infant seat and having two projecting legs adapted to connect to the front wheel axle.

13. An infant carriage according to any of Claims 4 to 12, wherein the drive means comprises pedals detachably mountable to the front wheel.

14. An infant carriage according to any of Claims 4 to 12, wherein the rider seat comprises a saddle provided on a seat mounting frame detachably mountable to the chassis frame and the drive means comprises a crank and pedals rotatably mounted to the seat mounting frame and a chain drivably connectable to a sprocket rotatably coupled to at least one of the rear wheels.

15. An infant carriage according to any of Claims 4 to 12, wherein the drive means comprises an electric motor and a transmission means which drivably couples the electric motor and at least one of the wheels.

16. An infant carriage according to any of Claims 1 to 3, wherein the infant carriage comprises at least two front wheels and at least two rear wheels.

17. An infant carriage according to Claim 16, wherein the front wheels are rotatably supported by a front wheel support frame mounted to the chassis frame.

18. An infant carriage according to Claim 16 or 17, wherein the infant carriage further comprises a steering locking means to permit the front wheels to be steerably locked when the infant carriage is in the pushing mode.

19. An infant carriage according to any of Claims 16 to 18, wherein the chassis frame comprises a Y

frame of tubular members, the front wheel support frame being mounted at the leg of the Y and each of the two rear wheels being positioned at an arm of the Y.

20. An infant carriage according to any of Claims 16 to 19, wherein the chassis frame further comprises a rider seat frame adapted to support the rider seat.

21. An infant carriage according to any of Claims 16 to 20, wherein the drive means comprises a crank and pedals rotatably mounted to the chassis frame and a chain drivably connectable to a sprocket rotatably coupled to at least one of the rear wheels.

22. An infant carriage according to any of Claims 16 to 20, wherein the drive means comprises an electric motor and a transmission means which drivably couples the electric motor and at least one of the rear wheels.

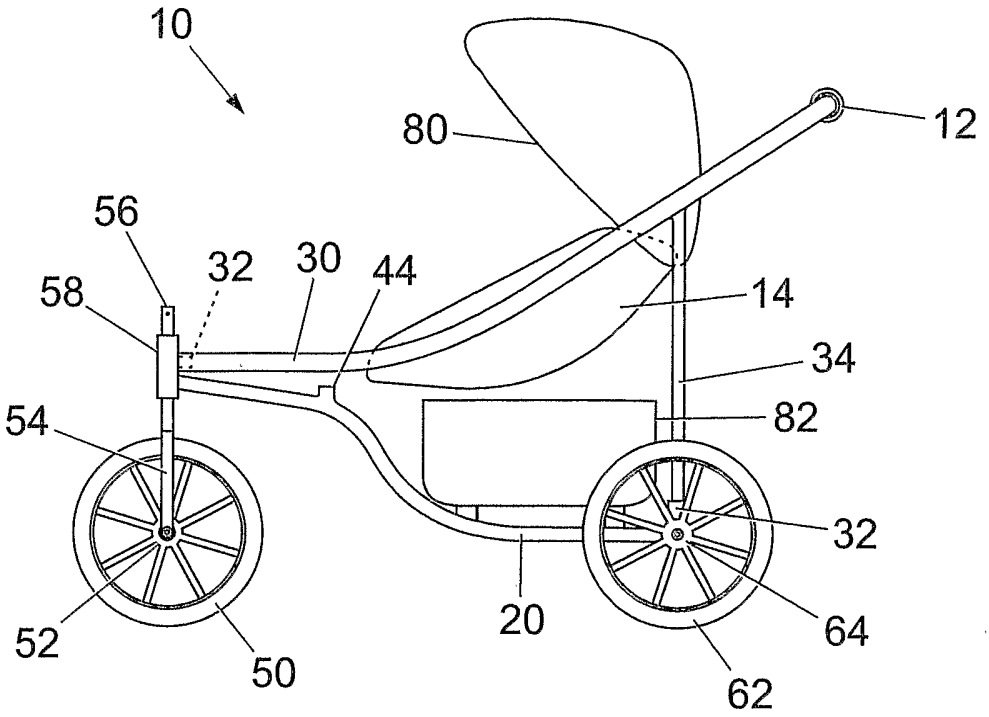
10
80
12
56
32
30
44
58
14
34
54
82
32
52
50
20
64
62

Fig. 1

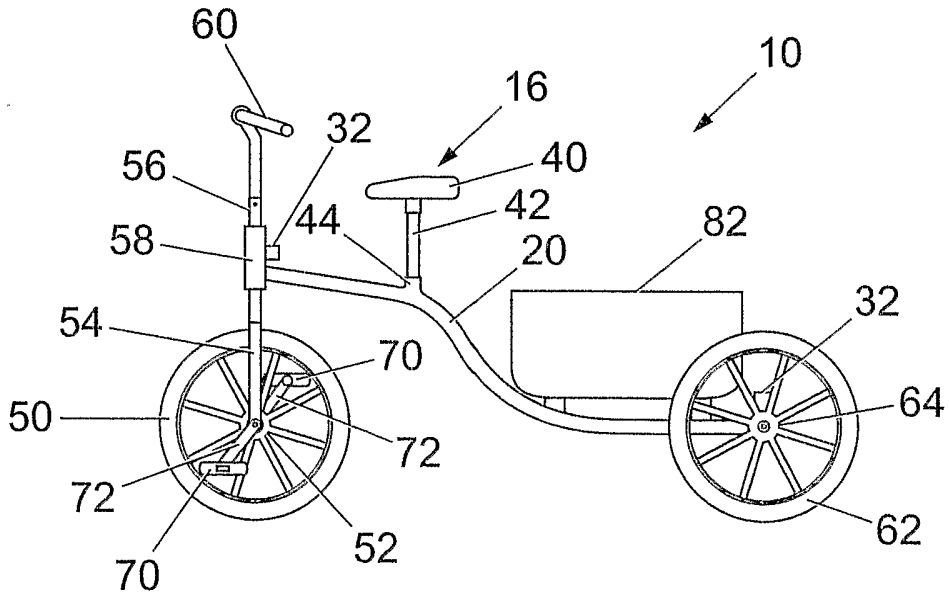
60
10
16
32
40
56
42
44
82
58
20
32
54
70
64
50
72
72
52
62
70

Fig. 2

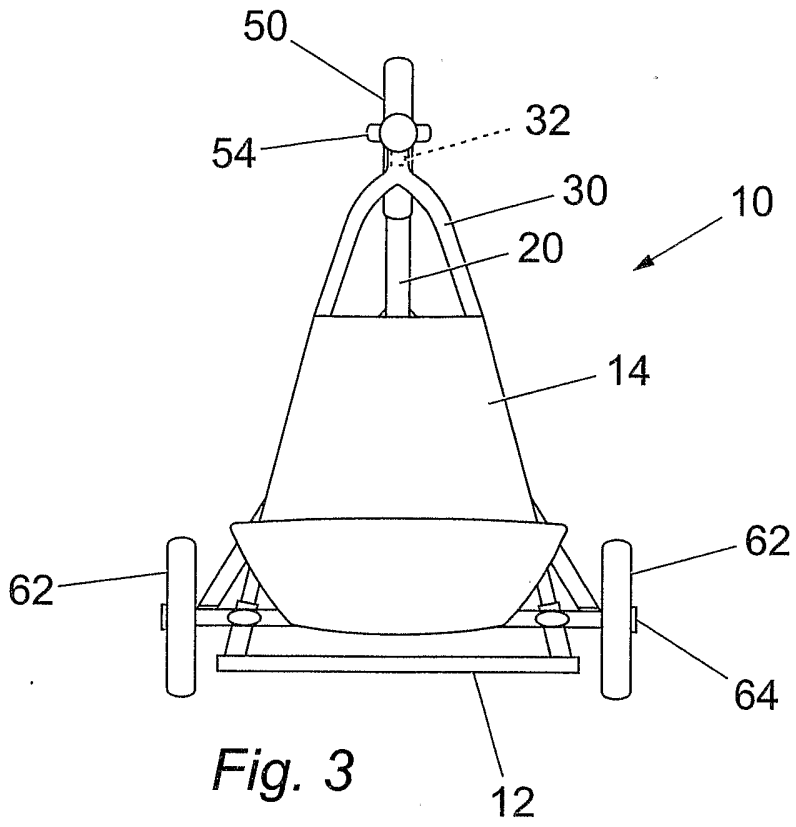

Fig. 3

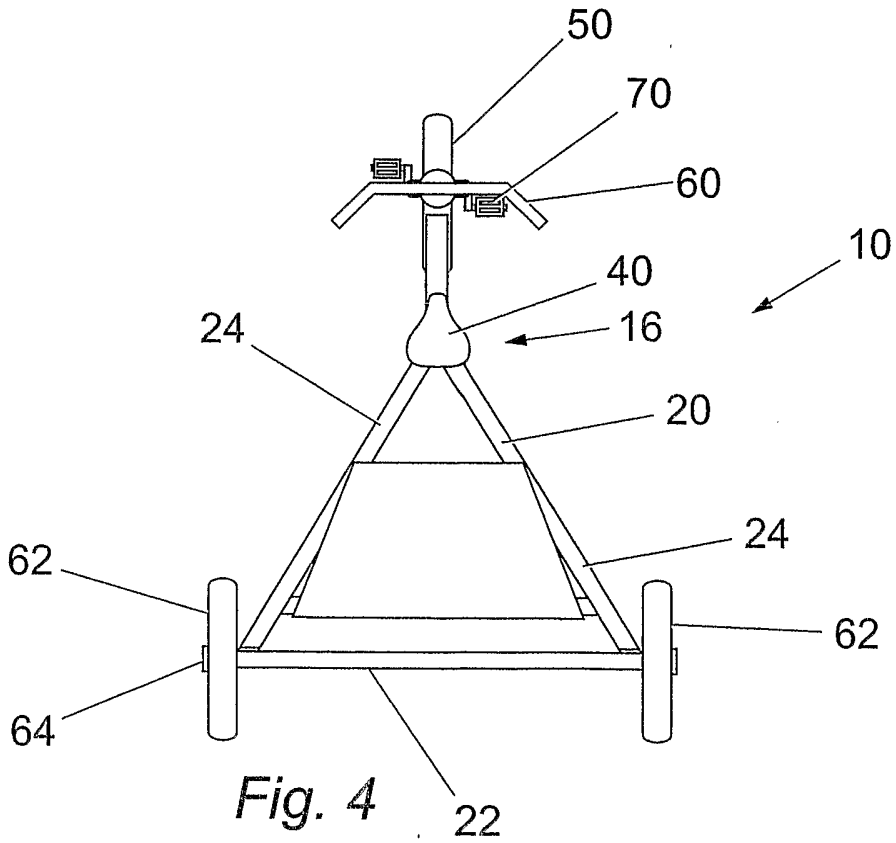

Fig. 4

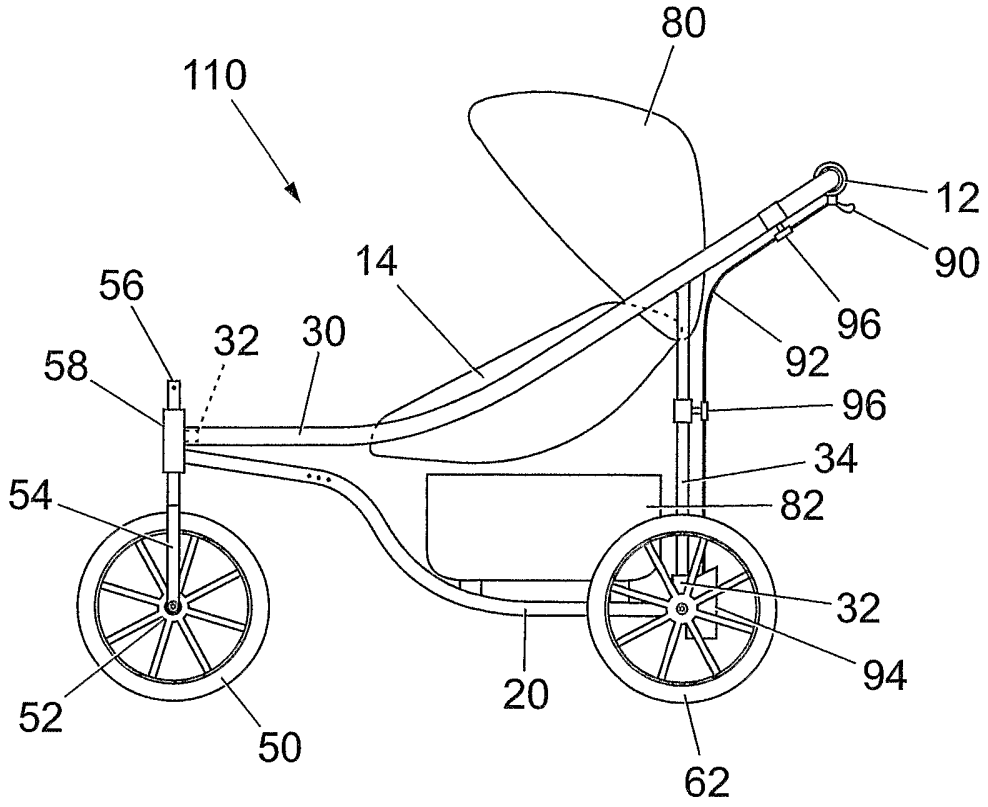
80
110
12
90
14
56
32
30
96
92
58
96
34
54
82
32
94
20
52
50
62

Fig. 5

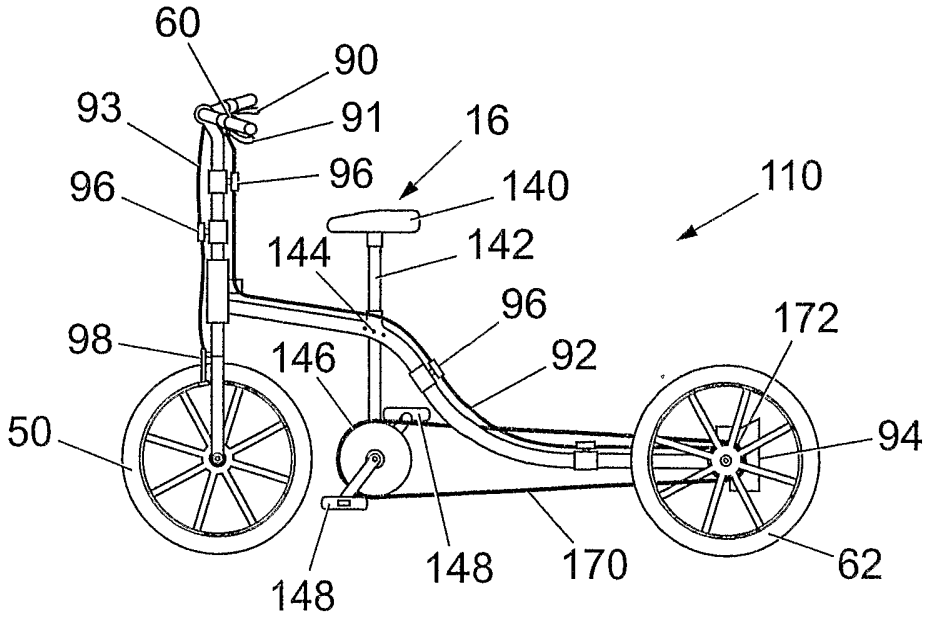
60
90
93
91
16
96
96
140
110
144
142
96
172
98
146
92
50
94
148
148
170
62

Fig. 6

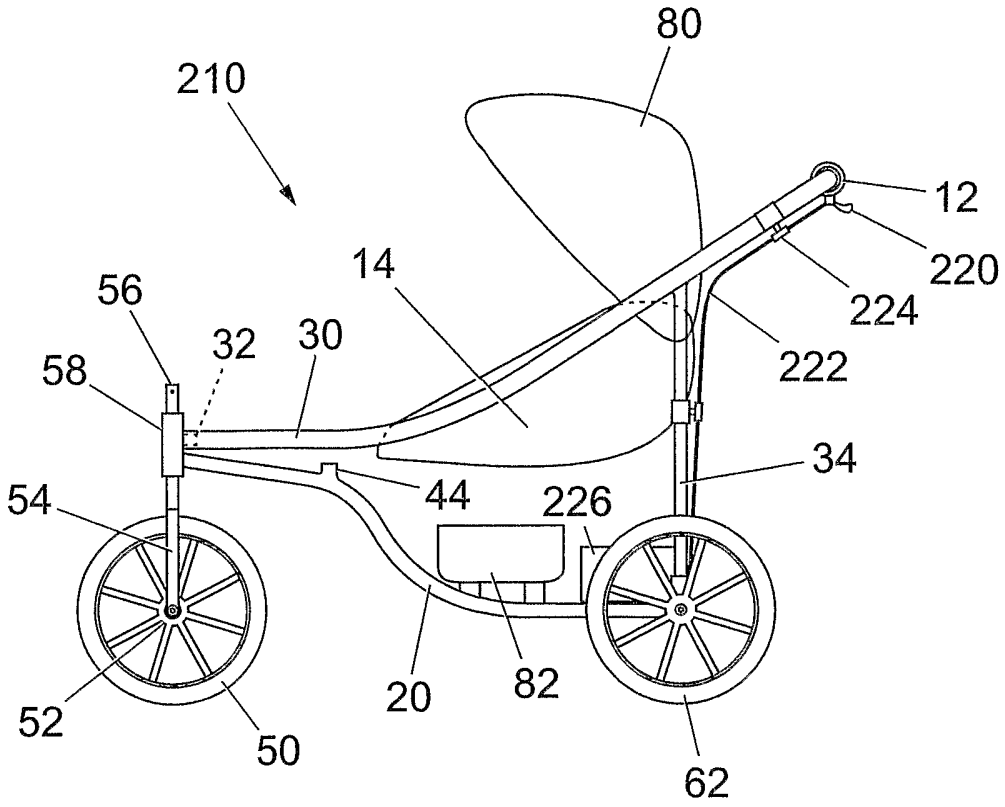
80
210
12
220
224
222
14
56
32
30
58
34
44
226
54
52
50
20
82
62

Fig. 7

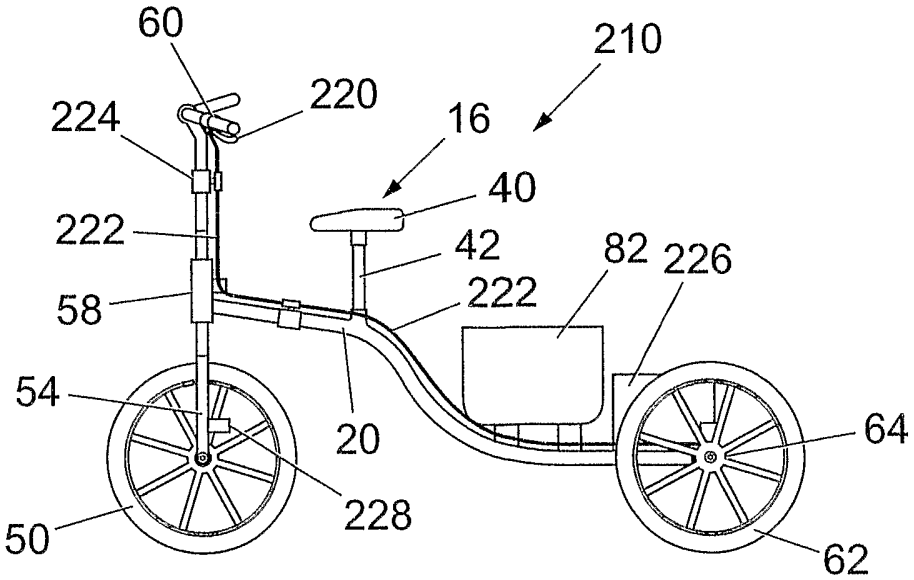
60
210
220
224
16
40
222
42
82
226
222
58
54
20
64
228
50
62

Fig. 8

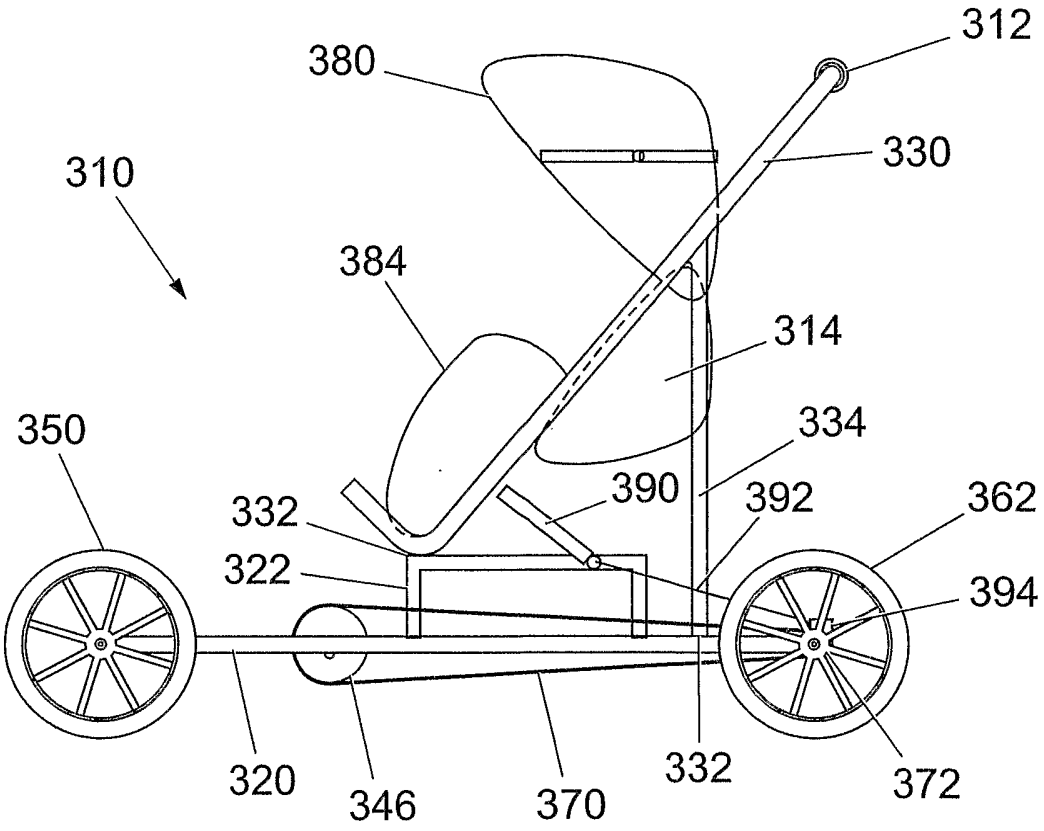
312
380
330
310
384
314
350
334
390
392
362
332
322
394
320
346
370
332
372

Fig. 9

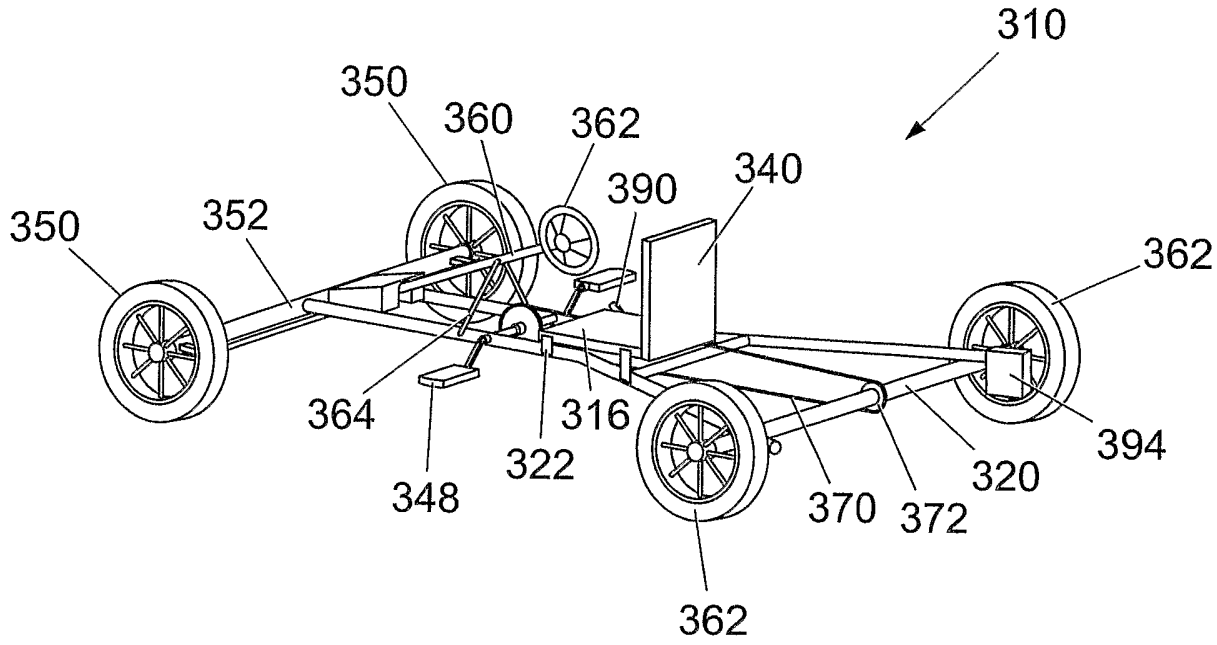
310
350
360
362
340
390
350
352
362
364
316
322
348
370
372
320
394
362

Fig. 10

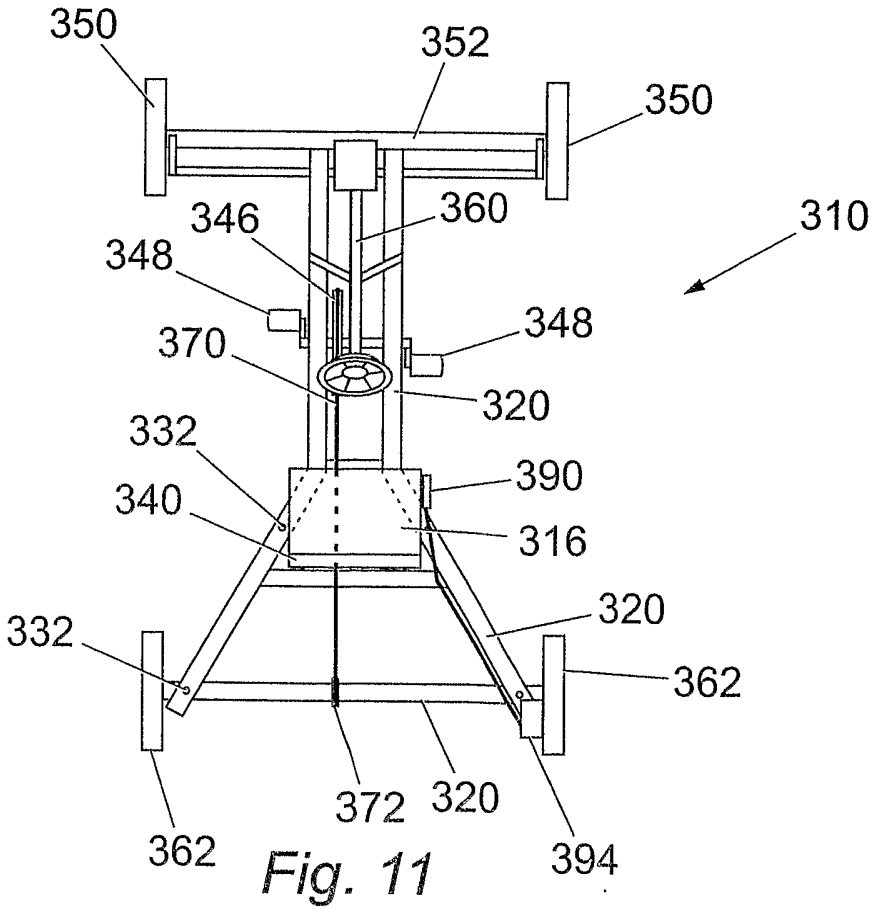
350
352
350
346
360
310
348
348
370
320
332
390
340
316
320
332
362
372
320
362
394

Fig. 11

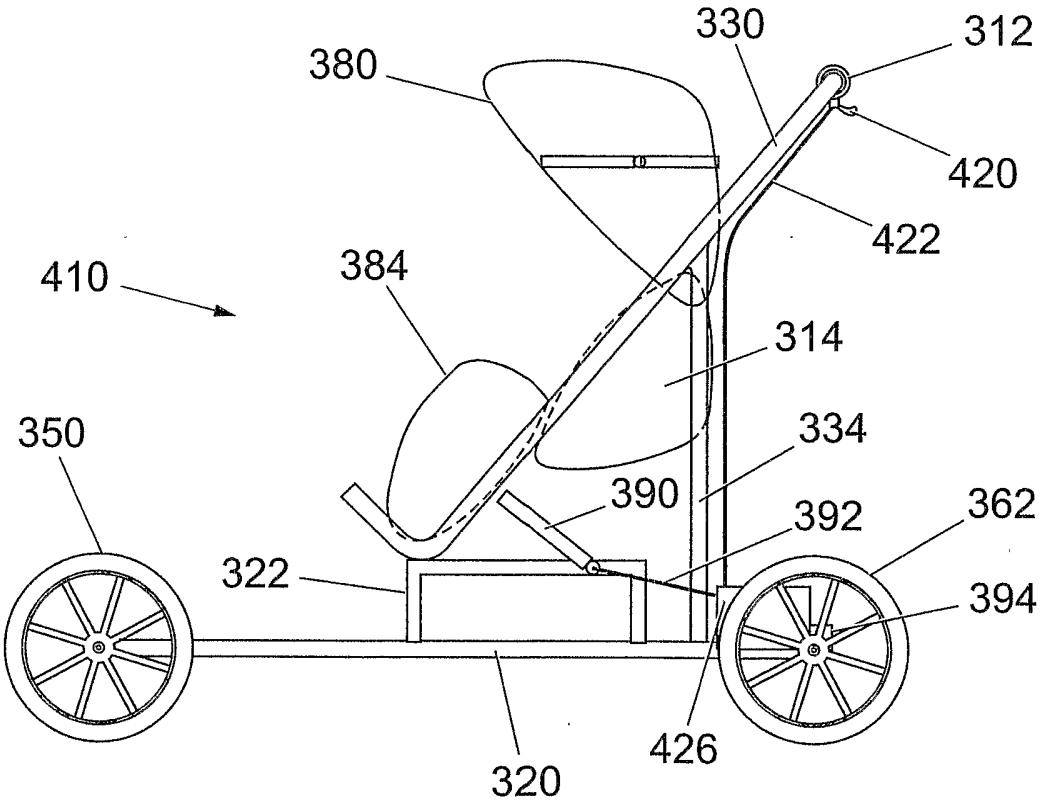
330
312
380
420
422
410
384
314
350
334
390
392
362
322
394
426
320

Fig. 12

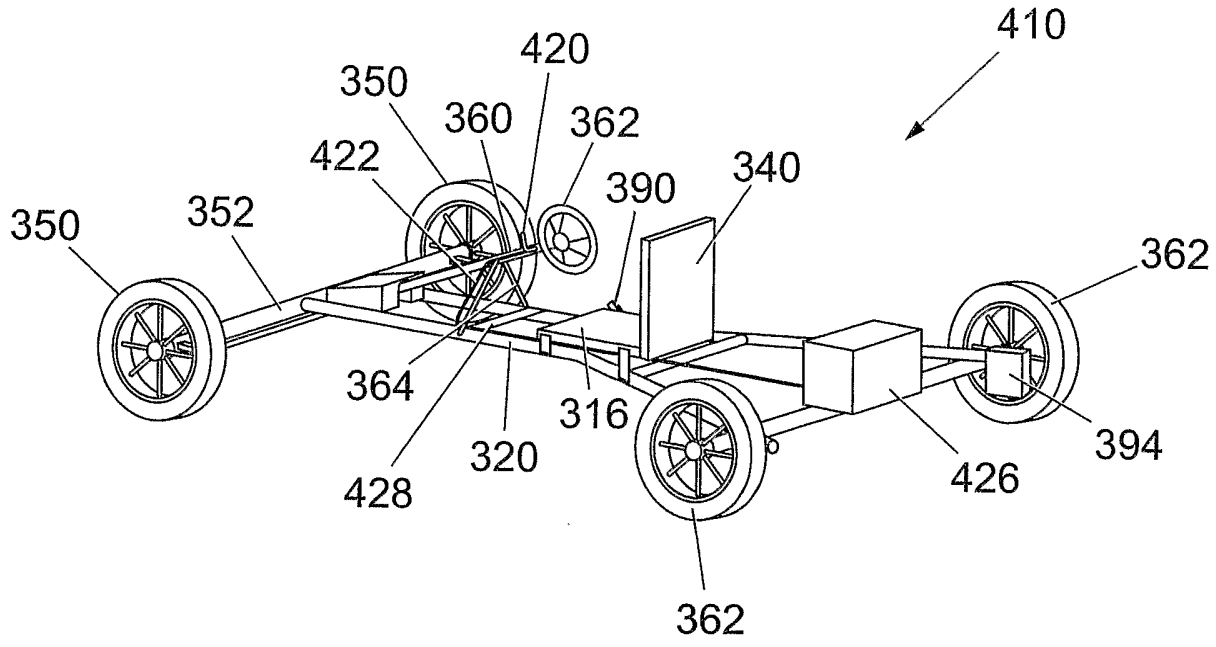
410
420
350
360
362
422
340
390
350
352
362
364
316
320
394
428
426
362

Fig. 13

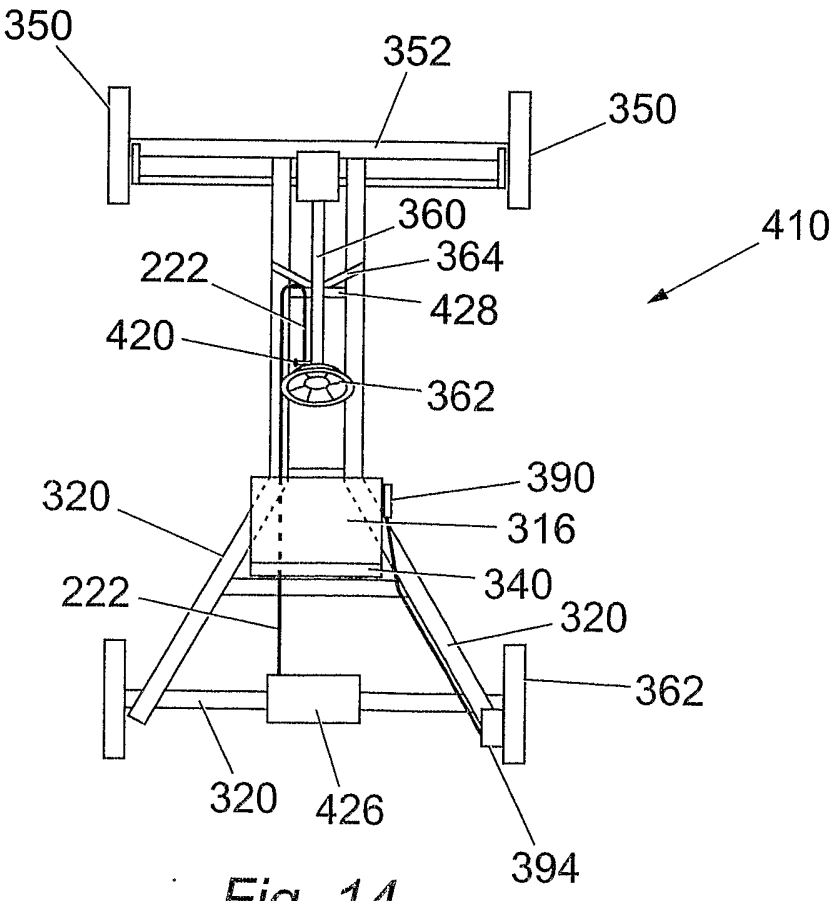
350
352
350
360
410
364
222
428
420
362
390
320
316
340
222
320
362
320
426
394

Fig. 14

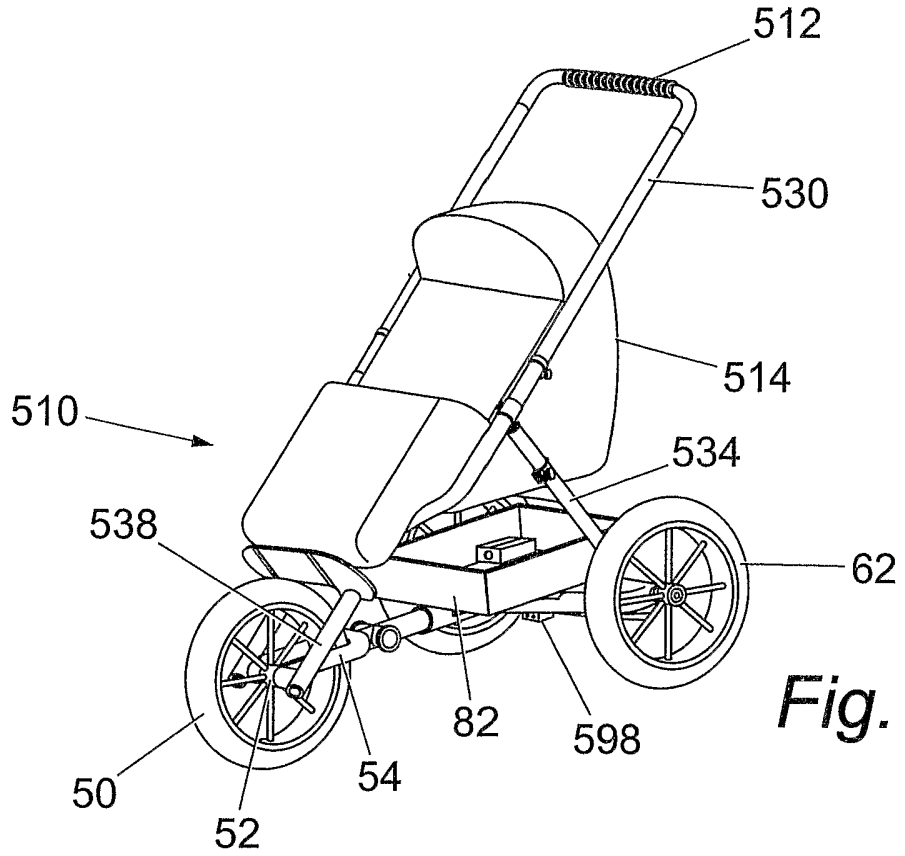
512
530
514
510
534
538
62
82
598
50
54
52

Fig. 15

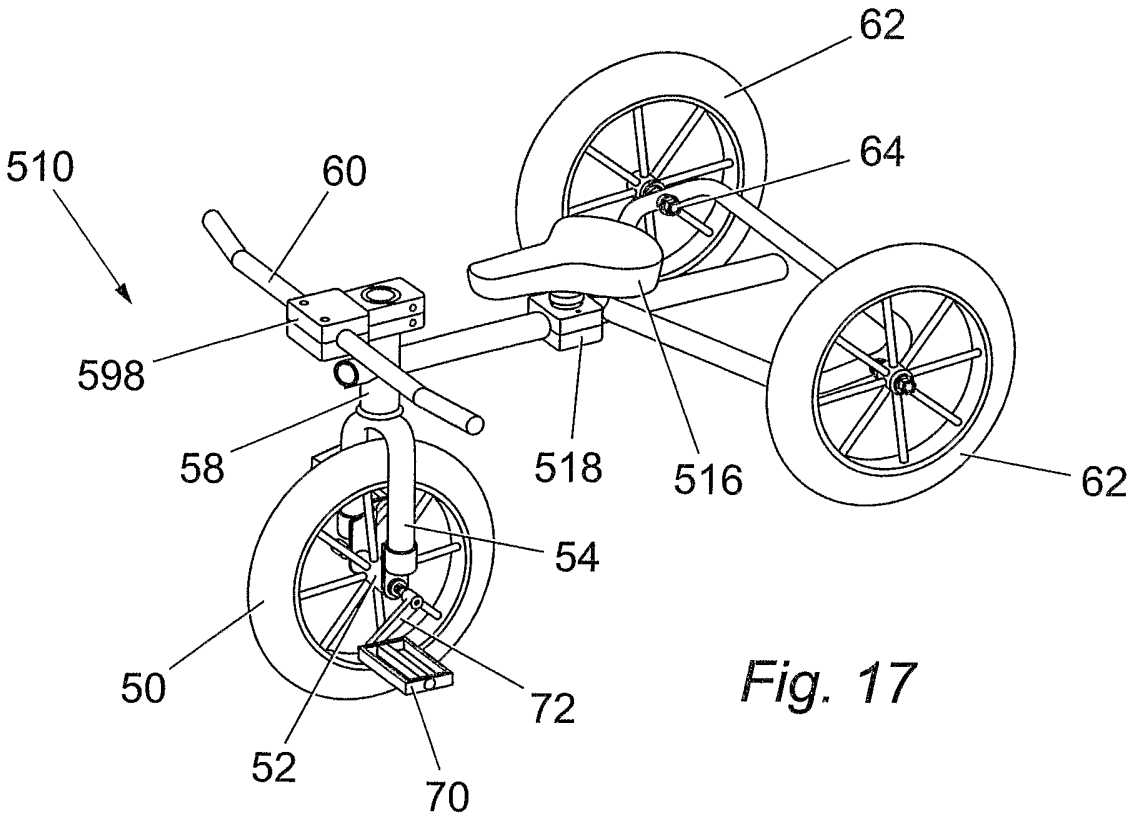
62
510
60
64
598
58
518
516
62
54
50
72
52
70

Fig. 17

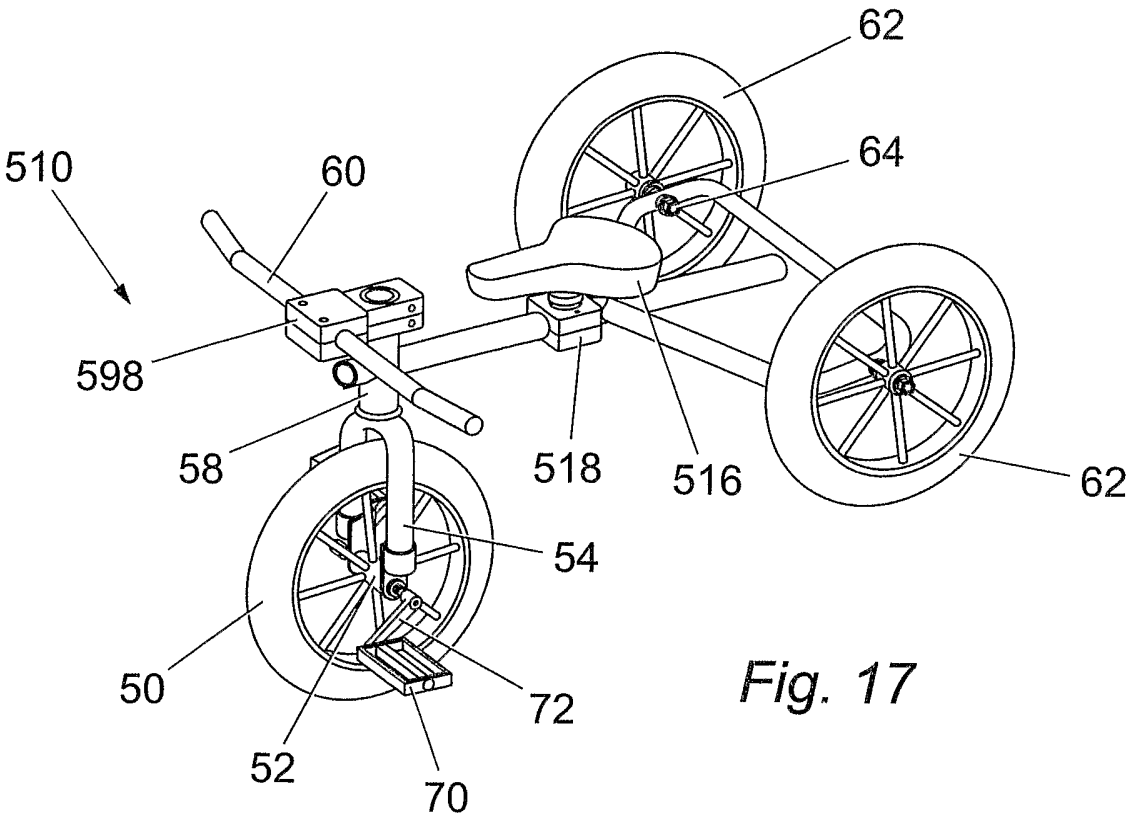
62
510
60
64
598
58
518
516
62
54
50
72
52
70

Fig. 17

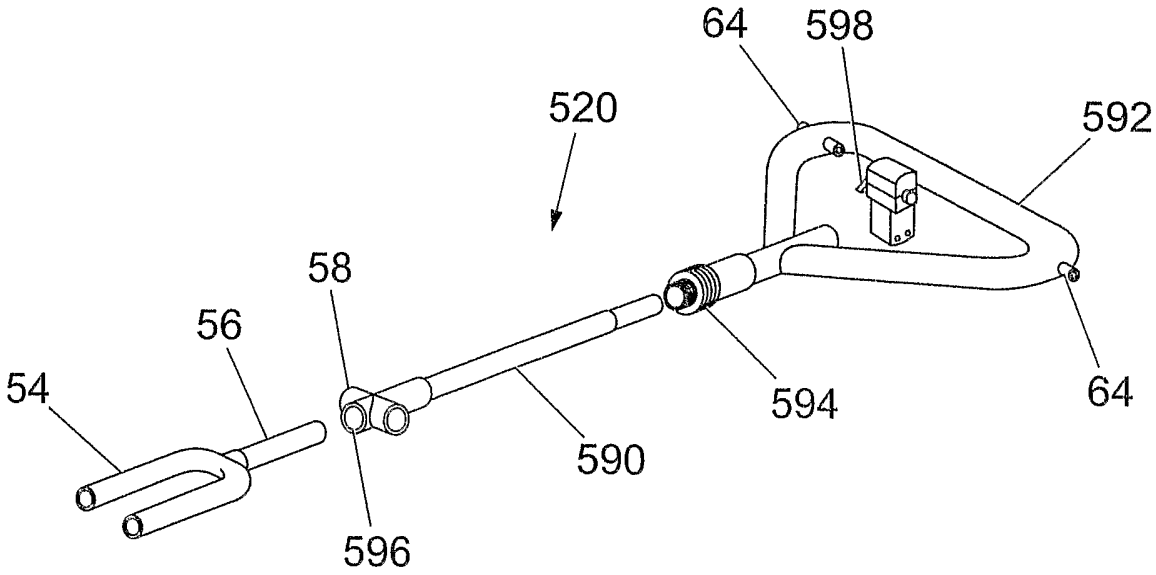
64
598
520
592
58
56
54
594
64
590
596

Fig. 18

INTERNATIONAL SEARCH REPORT

tional Application No
PCT/GB2004/000257

A. CLASSIFICATION OF SUBJECT MATTER
IPC 7 B62B7/12 B62K13/00 B62K9/00

According to International Patent Classification (IPC) or to both national classification and IPC

B. FIELDS SEARCHED

Minimum documentation searched (classification system followed by classification symbols)
IPC 7 B62B B62K

Documentation searched other than minimum documentation to the extent that such documents are included in the fields searched

Electronic data base consulted during the international search (name of data base and, where practical, search terms used)

EPO-Internal, WPI Data, PAJ

C. DOCUMENTS CONSIDERED TO BE RELEVANT

Category °	Citation of document, with indication, where appropriate, of the relevant passages	Relevant to claim No.
X Y	DE 426 912 C (ELSA ANDERSKI GEB KREUTZMANN) 20 March 1926 (1926-03-20) the whole document	1,2,4,5, 11-13 3,7-10, 14-22
X	US 3 485 507 A (CHRISTOF FRANK) 23 December 1969 (1969-12-23) the whole document	1,2,4-6, 13
Y A	DE 100 36 997 A (PIRA SANTO LI) 2 August 2001 (2001-08-02) the whole document	14,19-21 1,2,4-6
Y	FR 924 476 A (WILLIAM H COLE & COMPANY LTD) 6 August 1947 (1947-08-06) the whole document	8,10, 15-18,22

-/--

[X] Further documents are listed in the continuation of box C.

[X] Patent family members are listed in annex.

° Special categories of cited documents :

"A" document defining the general state of the art which is not considered to be of particular relevance

"E" earlier document but published on or after the international filing date

"L" document which may throw doubts on priority claim(s) or which is cited to establish the publication date of another citation or other special reason (as specified)

"O" document referring to an oral disclosure, use, exhibition or other means

"P" document published prior to the international filing date but later than the priority date claimed

"T" later document published after the international filing date or priority date and not in conflict with the application but cited to understand the principle or theory underlying the invention

"X" document of particular relevance; the claimed invention cannot be considered novel or cannot be considered to involve an inventive step when the document is taken alone

"Y" document of particular relevance; the claimed invention cannot be considered to involve an inventive step when the document is combined with one or more other such documents, such combination being obvious to a person skilled in the art.

"&" document member of the same patent family

Date of the actual completion of the international search	Date of mailing of the international search report
4 May 2004	19/05/2004

Name and mailing address of the ISA	Authorized officer
European Patent Office, P.B. 5818 Patentlaan 2 NL – 2280 HV Rijswijk Tel. (+31-70) 340-2040, Tx. 31 651 epo nl, Fax: (+31-70) 340-3016	Wochinz, R

INTERNATIONAL SEARCH REPORT

ational Application No
PCT/GB2004/000257

C.(Continuation) DOCUMENTS CONSIDERED TO BE RELEVANT

Category °	Citation of document, with indication, where appropriate, of the relevant passages	Relevant to claim No.
Y	US 4 189 164 A (MOORER DONALD K) 19 February 1980 (1980-02-19) column 1, line 29 - line 32 column 2, line 41 - line 54 column 3, line 55 - line 57; figures	3,7,9

INTERNATIONAL SEARCH REPORT

International Application No
GB2004/000257

Patent document cited in search report		Publication date	Patent family member(s)		Publication date
DE 426912	C	20-03-1926	NONE		
US 3485507	A	23-12-1969	NONE		
DE 10036997	A	02-08-2001	DE DE	19949917 A1 10036997 A1	13-04-2000 02-08-2001
FR 924476	A	06-08-1947	NONE		
US 4189164	A	19-02-1980	NONE		