2 Sheets—Sheet 1.

E. R. CAHOONE.

HARNESS-SADDLES.

No. 193,749. Patented July 31, 1877.

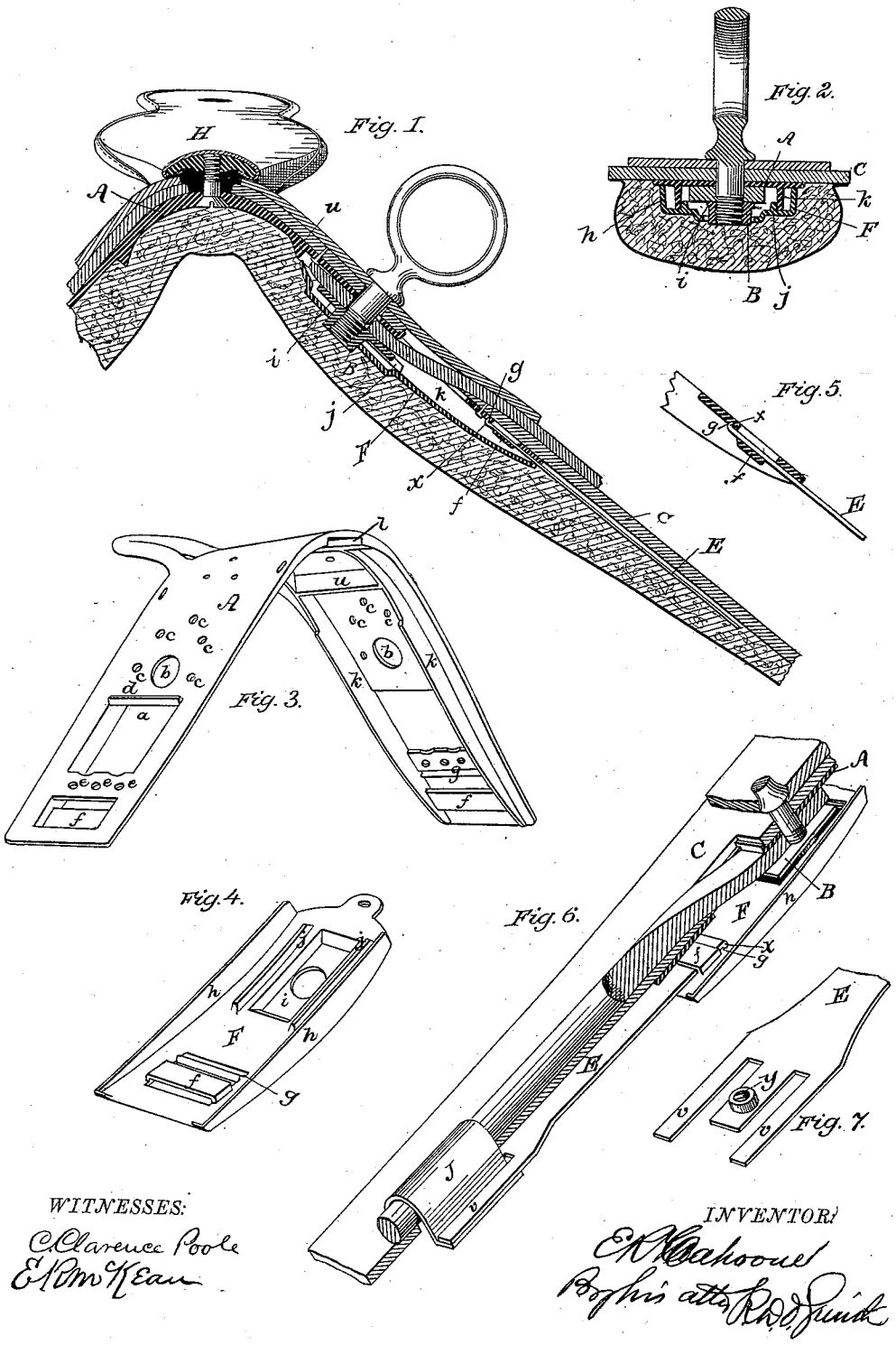

WITNESSES:

C. Clarence Poole

E. R. McKean

INVENTOR:

E. R. Cahoone

By his atty R. D. Quinn

N. PETERS, PHOTO-LITHOGRAPHER, WASHINGTON, D. C.

2 Sheets—Sheet 2.

E. R. CAHOONE.

HARNESS-SADDLES.

No. 193,749. Patented July 31, 1877.

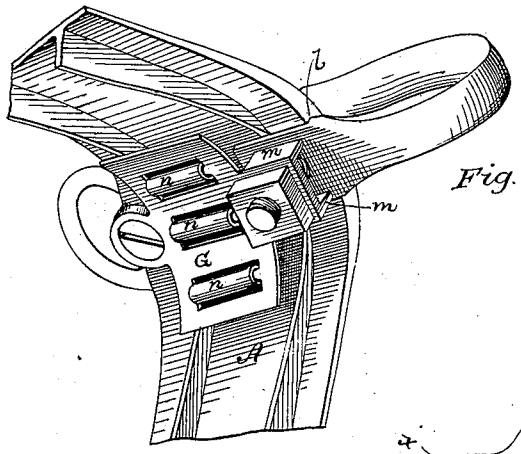

Fig. 8.

Fig. 10.

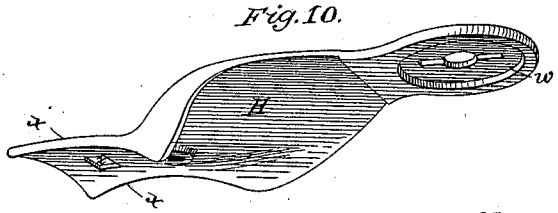

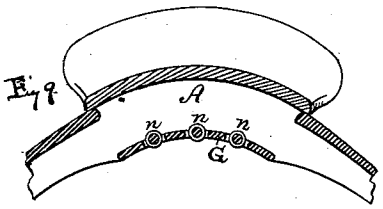

Fig. 12.

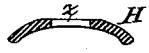

Fig. 11.

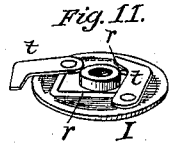

Fig. 15.



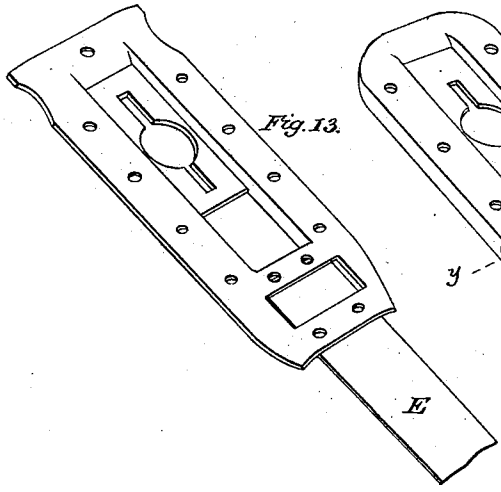

Fig. 13.

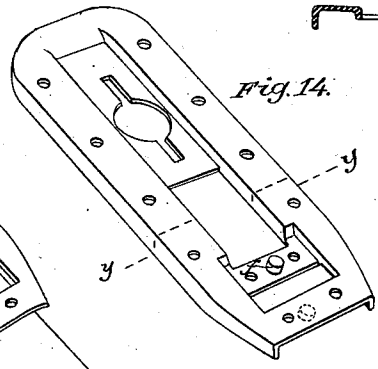

Fig. 14.

WITNESSES:

C. Clarence Poole

E. R. McKean

INVENTOR:

E. R. Cahoone

By his atty R. D. Smith.

N. PETERS, PHOTO-LITHOGRAPHER, WASHINGTON, D. C.

UNITED STATES PATENT OFFICE.

EDWIN R. CAHOONE, OF NEWARK, NEW JERSEY.

IMPROVEMENT IN HARNESS-SADDLES.

Specification forming part of Letters Patent No. **193,749**, dated July 31, 1877; application filed July 6, 1877.

To all whom it may concern:

Be it known that I, EDWIN R. CAHOONE, of Newark, in the county of Essex and State of New Jersey, have invented a new and useful Improvement in Harness-Saddles; and I do hereby declare the following to be a full, clear, and exact description of the same, reference being had to the accompanying drawings, in which—

Figure 1 is a longitudinal section of my harness-saddle complete. Fig. 2 is a transverse section of the same through the terret. Fig. 3 is a perspective of the tree. Fig 4 is a corresponding figure of my under plate. Fig. 5 is a longitudinal section of the end of the tree, showing the mode of securing the stiffener. Fig. 6 is a sectional perspective, showing the end of the tree, stiffener, flap, backstrap, and D loop. Fig. 7 is a perspective of the lower end of the stiffener, bottom view. Fig. 8 is a perspective of the under side of a saddle with my back-band bridge in place. Fig. 9 is a longitudinal section of a modification of the same. Fig. 10 is a perspective of the tree of the saddle-seat. Fig. 11 is a perspective view of the nut-cover. Fig. 12 is a transverse section across the pommel end of the seat-tree on line *x x*. Figs. 13, 14 are perspectives of modifications of the under plate. Fig. 15 is a transverse section of Fig. 14 on line *y y*.

This invention relates to that class of harness-saddles which are constructed with reference to convenience in changing mountings, and will be fully understood from the following particular description and claims.

The saddle-tree A is made with its upper surface flat, in a transverse direction, clear down to its end, so that the jockey and flap will set down close and flat upon its surface, and the flap will be firmly supported across the end of the tree. It is provided with a square orifice, *a*, just below the terret-hole *b*, for the reception of the terret-nut B, which may thereby be slipped into its seat below the tree, and to receive the end of the back-band, which therein passes below the tree. The flap is laid flat upon the tree, and has a hole corresponding to the orifice *a*, for the passage of the terret-nut and back-band. Heretofore it has been common to secure the flap C to the tree by nails driven through holes in the edge of the tree into the flap-leather, where they are clinched by having their points driven against an iron. This operation requires that the saddle shall be turned about, side for side, before this operation of nailing can be completed, because the nails can be driven in only one edge at a time; and if the jockey and flap are stitched together, this nailing is necessarily a more difficult operation, because the clinching-iron must then be very thin, and its edge must be inserted in the seam as far as the stitches will permit it to go. Either of the above methods requires the extra handling or turning about of the saddle during the course of construction, as above set forth, and the same is avoided by my method, which consists in nailing the flap to the center of the tree instead of to its edges.

For this purpose the holes *c c* are formed in the central portion of the tree. Nails driven through these holes afford an equally secure fastening, and may be driven without moving the saddle from its position. When the flap and jockey have been stitched together the nailing may still be effected without difficulty by pushing a flat piece of iron up the middle, between the flap and jockey, for the points of the nails to clinch against.

As an additional security against displacement of the flap, I place a rib, *d*, or a series of projections or lugs, transversely across the upper surface of the tree, preferably between the terret-hole and the back-band opening, though it may be placed above the terret-hole, if desired. The hole cut through the flap, corresponding to the back-band hole, is large enough to inclose this rib *d*, or its equivalent series of projections, so that when the terret is screwed down the flap will be pressed down and confined behind the same, so that it cannot pull away from its position, even though no nails had been employed.

The flap is also nailed to the end of the tree through holes *e e* made therein, so that said flap will be supported across the whole end of the tree, and not so liable to be broken as has heretofore been the case when the cuts through

said flap necessary to admit the back-band to pass through extend down to the end of the tree.

The tree A is constructed with longitudinal ribs *k* down each side, beneath, near to the edge, for the purpose of stiffening the tree and making space for the back-band strap, terret-nuts, &c. And I sometimes make a pocket for the terret-nut by nailing a piece of stiff leather at one end to the under side of the bottom loop of the tree, and at its upper end to the tree above a transverse rib, *u*, which acts as a bridge to distend said leather and keep the pocket open. This method is adapted to cheap work; but as the ribs *k* will sometimes work through the pad and reach the horse's back, I prefer to cover them with an under plate, F, the edges of which are provided with perpendicular ribs or flanges *h*, which shut over and inclose the ribs *k*, and may be secured in place by nails or rivets driven through suitable openings into the leather flap or into the tree. Near its upper end there is a depression or recess, *i*, adapted to receive the terret-nut as it is slipped in through the opening *a* in the tree, and along the edges of said recess are two ribs, *j j*, to prevent the nut from riding up and turning around while the terret is being screwed in. When the ribs *k* are present they shut down between the ribs *j* and flanges *h*, so that the ends of the terret-nuts cannot work under the edges of said ribs *k*. The general surface of the under plate F is convex longitudinally, but straight transversely, and smooth, and its edges are perpendicular. The pad-stuffing therefore runs smoothly over said plate, but the perpendicular edges suffice to keep the stuffing in place as it packs in behind them.

When the edge of the under plate is thin, as is the case when said plate is convex transversely, the stuffing will finally work together at one side in a bunch.

I sometimes modify the form of the under plate F, as shown in Figs. 14 and 15, wherein, to suit trees of some kinds, it is desirable that the under plate should be flat or straight, both longitudinally and transversely. As shown in Fig. 15, the perpendicular edges are the same as heretofore described, and effect the same object in preventing the stuffing from working over.

It has been common to secure the stiffener E to the end of the tree, or to the under plate, by means of portable rivets; but this is an operation which involves several others, such as punching or drilling holes, making rivets, handling, &c., all of which consume time, which is saved by my method, which is much more simple.

The stiffener is formed with a transverse or hooking flange, *x*, across one end, as shown, and this end of the stiffener is inserted under a loop, *f*, far enough to enable said hooking end to pass and engage with a corresponding shoulder or groove, *g*. A blow with a hammer will then permanently depress said loop and lock the ribs *x* and *g*, so that the stiffener cannot be removed. This method of attachment may apply indifferently to the tree, as shown in Figs. 1, 3, and 5, or to the under plate, as shown in Figs. 4, 6, 13.

Interlocking parts otherwise constructed may be made so as to be forced into engagement by depressing the loop *f*, as set forth; or, if the stiffener is somewhat yielding, a considerable degree of firmness may be secured by the depression of said loop if the interlocking shoulders are entirely omitted. I also sometimes form at the outer end of the stiffener a fork or key, substantially as shown at *v*, and the D loop J is made with its feet turned outward, as shown. These latter are pushed through slots in the flap, and the forks *v* are then slipped under said feet, as shown, and so confine them and prevent their withdrawal.

The center part of said stiffener between the fork *v* fits between the feet of the D loop, and keeps them securely in position. This part is also provided with a boss, *y*, which may be bored and tapped to receive the screw of a pad-ring, &c., when the D loop is not used.

At the top of the arch of the tree A, I make a depressed seat for the butt end of the water-hook, so that when the same is in place it will not project much, if at all, above the general surface of the arch. This is important when it is proposed to pass the back-band over from side to side.

The water-hook is kept in place by the foot *m* of the bridge G, which rests upon it, and receives the end of the water-hook bolt through it, with the nut on the outside of said foot. The bridge G passes from front to back under the arch of the tree, so as to support the back-strap above the horse's back, and at its back end it is secured by a common screw tapped into a boss on the under side of the tree. To facilitate the working of the back-strap, friction-rollers *n n* are placed in said bridge.

The advantage of this arrangement is apparent, as it permits the back-strap to move with freedom, and the strapway with its friction-rollers are all concealed below the saddle and out of sight.

I am not aware that light saddles have ever before been made with concealed strapways provided with friction-rollers.

It is apparent that the bridge G may be made with the saddle cast in one piece therewith either by coring or by casting the saddle open at the top, as shown in Fig. 9.

The saddle-seat H is made with a plain flat surface, *z*, at the pommel, and the hole for the water-hook bolt penetrates at that point, whereby the head of that bolt has a flat bearing all around, instead of on two sides only, as heretofore, and there is a corresponding improvement in the finish.

At the rear or cantle end of said seat, on the under side, I make a recess, *w*, into which a nut or nut-holder is adapted to fit. The object of this is to enable me to finish up and

cover with leather said saddle-seat in advance of the selection of the mountings. Heretofore the nut has been riveted on and then covered; but it is then necessary to use a certain mounting only. I now have a nut with a broad head, which will overlap the hole in the leather covering and compress and clamp the same in the seat or recess *w*. This head on the nut may be either permanent or removable. I prefer to make it removable, so that the nut may be changed when desirable.

In the drawing such a removable head or cover is shown at I, wherein any nut will be received and held, and perfectly covered, so as to present a smooth surface below.

The cover I, as shown, is provided with two ribs, *r r*, between which the nut is secured, and two pivoted buttons, *t t*, which close over its ends and confine it.

When the terret (or other mounting) screw is screwed into the nut so held, the edges of the cover I are drawn up against the leather, so as to clamp the same, and the buttons *t t* are thereby also prevented from unclosing.

Having described my invention, what I claim as new is—

1. A saddle-tree constructed with a flat upper surface continuous to the end of said tree, with the exception of openings *a* for the passage of the back-band, &c., as set forth.

2. The saddle-tree A, constructed with a flat upper surface continuous to the end of said tree, and provided with the opening *a* for the passage of the back-band, combined with the flap C, secured to the central part of said tree by tacks or nails driven through holes *c c*, in contradistinction to a fastening by nails or tacks driven through holes along the edge of the tree, substantially as and for the purpose set forth.

3. The saddle-tree A, provided with the transverse rib *d*, substantially as described, combined with the flap-leather C, for the purpose set forth.

4. A saddle-tree, A, flat on its upper surface, and provided with an orifice, *a*, for the purpose set forth, and with the transverse rib *u* on the under side of said tree and above the terret-hole, for the purpose described.

5. The stiffener E, constructed with a flange across one end, as shown, combined with the loop *f* and shoulder *g*, with which said flange is caused to engage and be firmly held by depressing said loop *f*, as set forth.

6. The under plate F, constructed with side ribs or flanges *h*, and a recess, *i*, to receive the nut for the terret, and ribs *j j* along the edges of said recess, to prevent the ends of the terret-nut from turning or slipping under the edges of the ribs *k* on the under side of the tree, whereby a pocket is formed to receive the terret-nut and the end of the back-strap, the edges of the ribs *k* are covered, and the padding is kept in place by the ribs *h*.

7. A tree, A, constructed with a recess, *l*, in the under side of the arch, to receive the end of the water-hook, combined with the bridge G, provided with feet *m*, substantially as and for the purpose set forth.

8. A saddle-tree, A, constructed with a smooth and unobstructed arch, combined with a detachable bridge, G, beneath said arch, and provided with friction-rollers *n*, as set forth.

9. The saddle-seat H, constructed with a flat surface, *z*, at the pommel, to secure a flat seat for the head of the water-hook bolt, as set forth.

10. The saddle-seat H, provided with a circular or other shaped depression or seat, *w*, in the under side of extended cantle, to receive the nut-holder for the fly-terret, as set forth.

11. The button or cover I, fitted to the under side of the cantle, and adapted to receive and securely hold the nut for the fly-terret, so that when said terret is screwed down the said cover will conceal the nut and still permit the same to be removed and replaced.

12. The button or holder I, constructed with a concave inner side and longitudinal ribs *r r* and pivoted buttons *t t*, as set forth.

13. The loop *f*, as shown and described, combined with the stiffener E, whereby said stiffener may be secured in place by depressing said loop, as set forth.

14. The stiffener E, constructed with the fork *v*, combined with the D loop J, provided with feet, as shown, whereby said fork keys and holds said loop fast.

E. R. CAHOONE.

Witnesses:

R. D. O. SMITH,

C. CLARENCE POOLE.