US 20220099290A1

(19) **United States**

(12) **Patent Application Publication** (10) **Pub. No.: US 2022/0099290 A1**

Stockill et al. (43) **Pub. Date: Mar. 31, 2022**

(54) **AIRCRAFT FUEL NOZZLE**

(71) Applicant: **Parker-Hannifin Corporation**, Cleveland, OH (US)

(72) Inventors: **Jon K. Stockill**, Rugeley (GB); **Brian Drake**, Chardon, OH (US); **Mark P. Ruffing**, Painesville, OH (US); **Adel B. Mansour**, Painesville, OH (US)

(21) Appl. No.: **17/487,894**

(22) Filed: **Sep. 28, 2021**

Related U.S. Application Data

(60) Provisional application No. 63/084,591, filed on Sep. 29, 2020.

Publication Classification

(51) **Int. Cl.**

F23D 11/10	(2006.01)
F23D 11/38	(2006.01)
F23R 3/28	(2006.01)

(52) **U.S. Cl.**

CPC ***F23D 11/107*** (2013.01); ***F23D 11/383*** (2013.01); *F23D 2900/11101* (2013.01); *F23D 2206/10* (2013.01); ***F23R 3/28*** (2013.01)

(57) **ABSTRACT**

A fuel injector for an aircraft gas turbine engine includes a housing stem, a fuel nozzle coupled to the housing stem, and a fuel conduit extending through the housing stem and into the fuel nozzle where the fuel conduit bends to extend in a longitudinal downstream direction within the fuel nozzle. The fuel conduit is configured to transport bulk fuel flow further along the nozzle before being split downstream in the fuel circuit for final spray distribution, thereby promoting lower fuel temperatures. The fuel nozzle may minimize metal-to-metal contact between an external wall of the nozzle in thermal communication with ambient environment and an internal portion of the nozzle in thermal communication with the fuel circuit to minimize heat pick-up in the fuel. The fuel conduit may include a coiled section within a cavity of the fuel nozzle for compensating for thermal growth mismatches of the fuel injector.

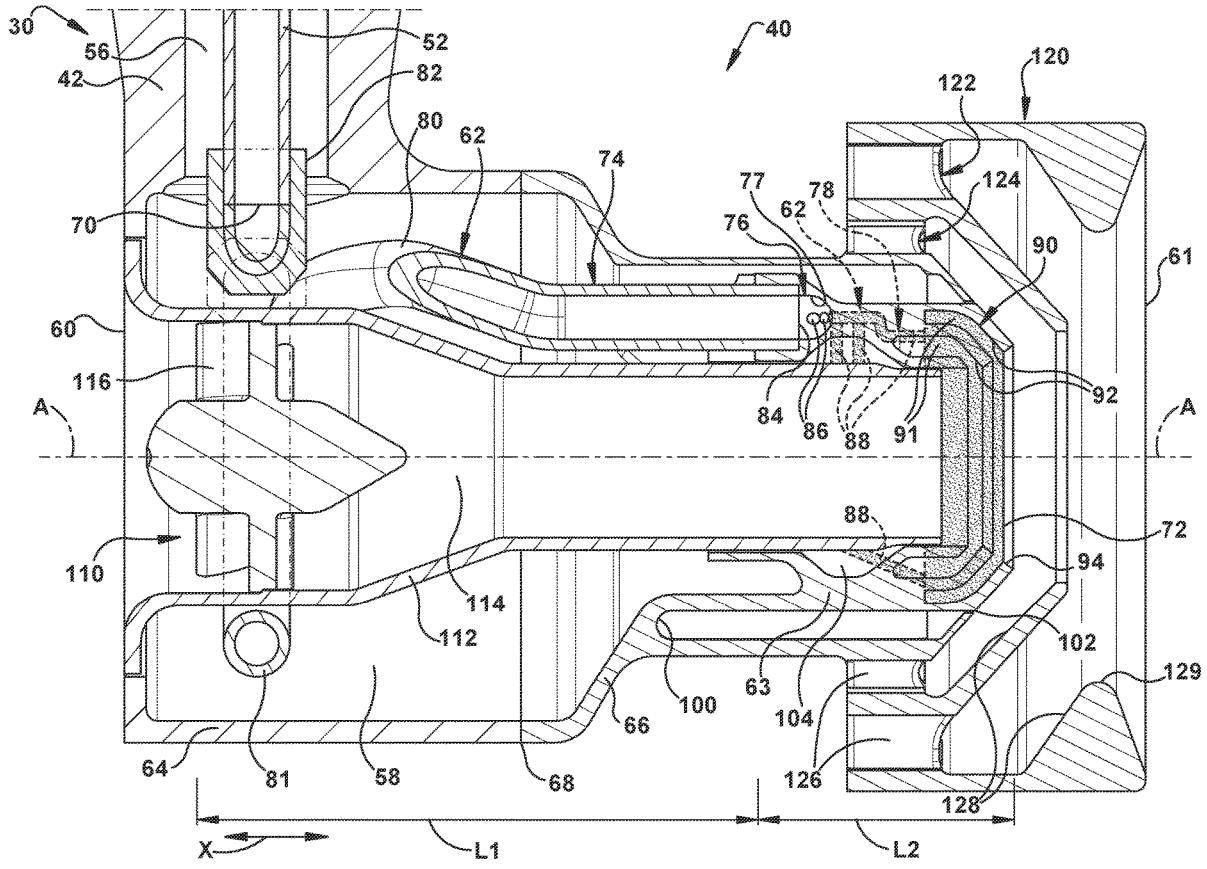

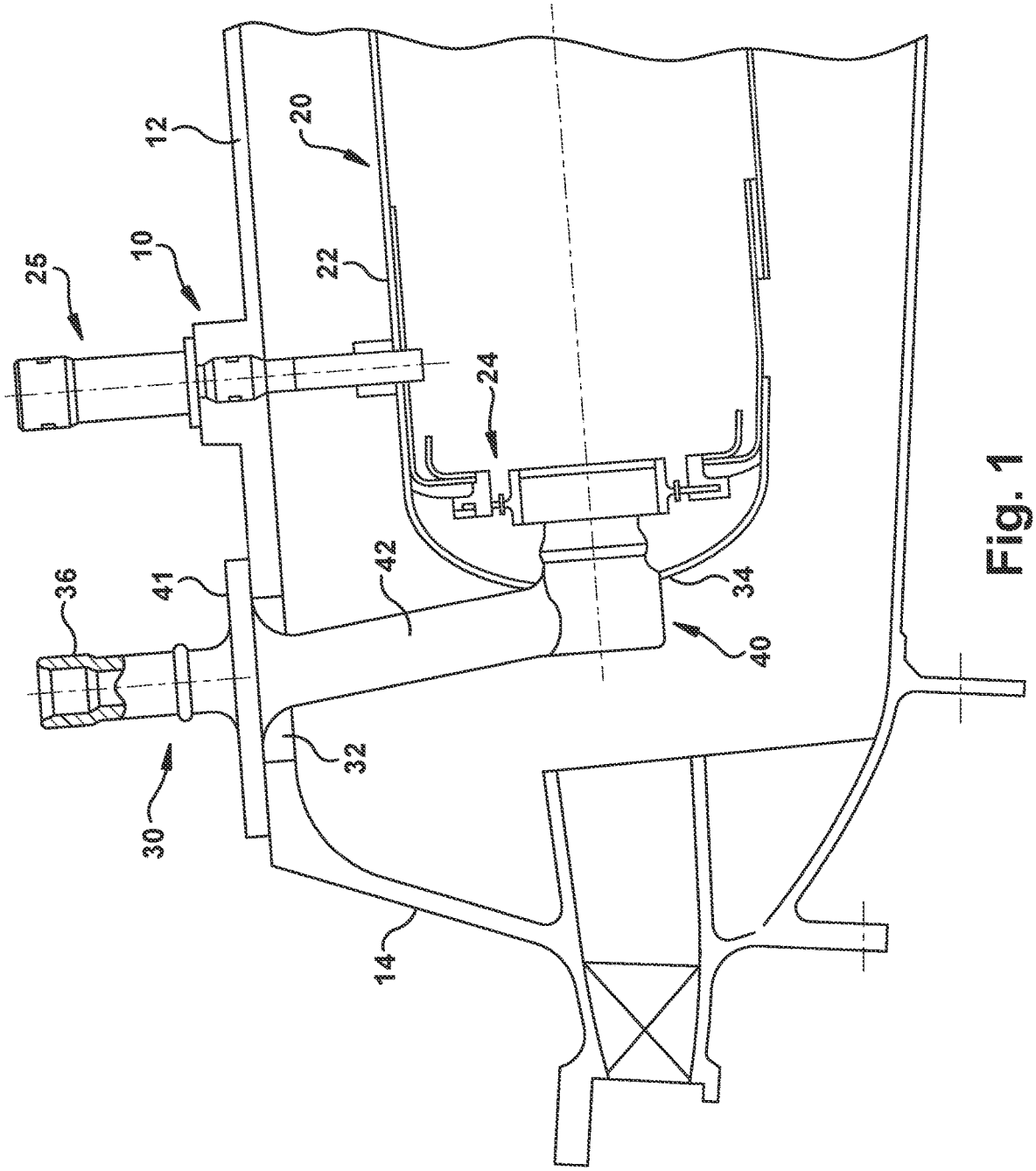

Fig. 1

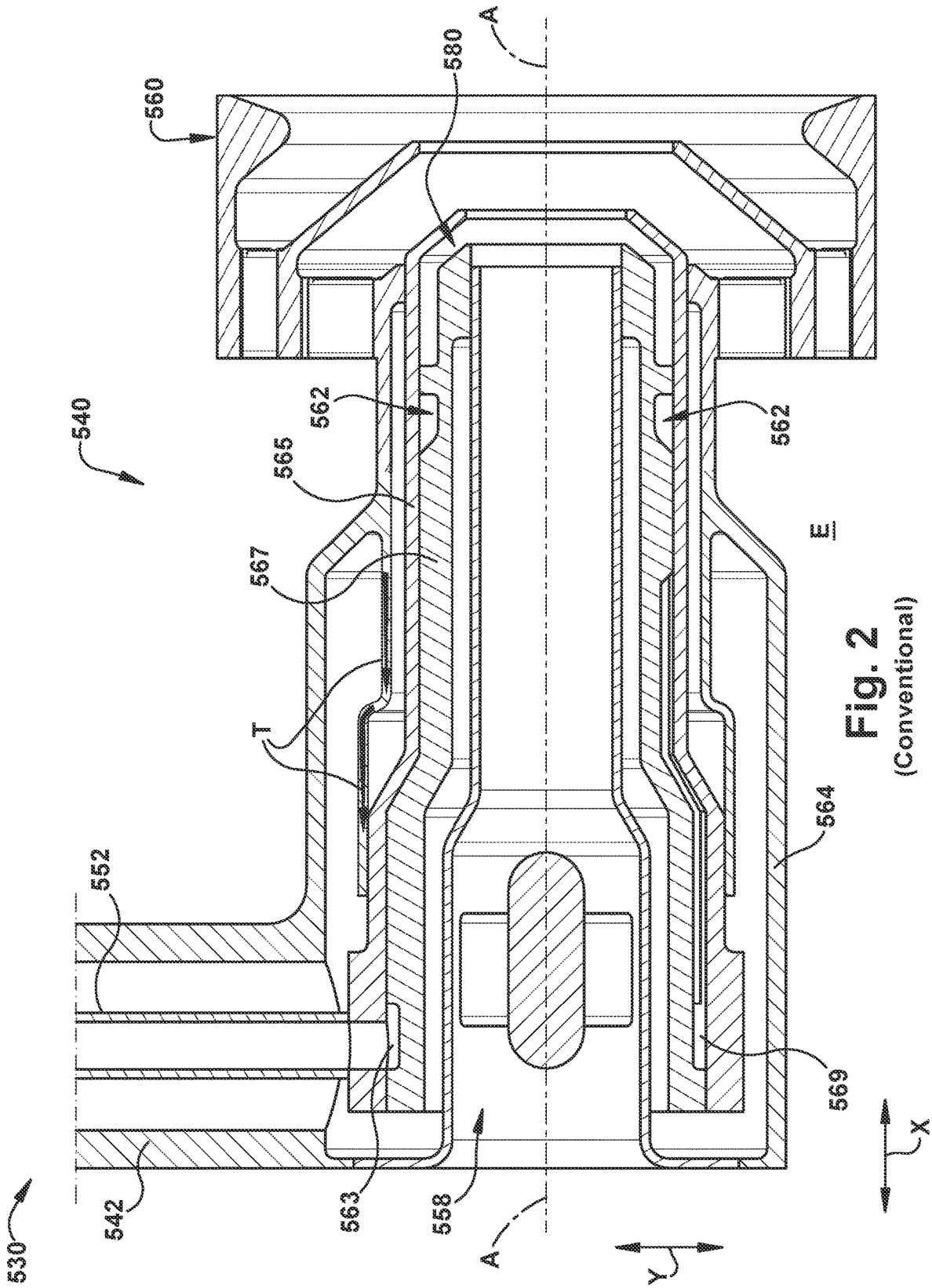

Fig. 2
(Conventional)

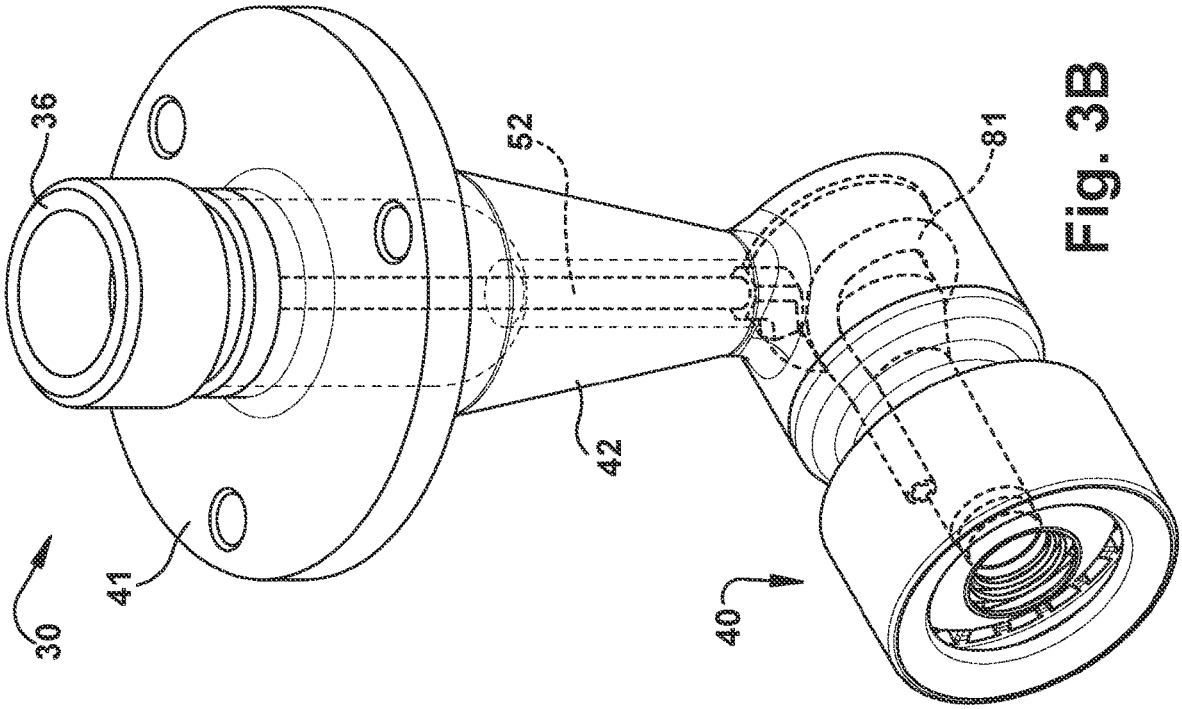

Fig. 3B

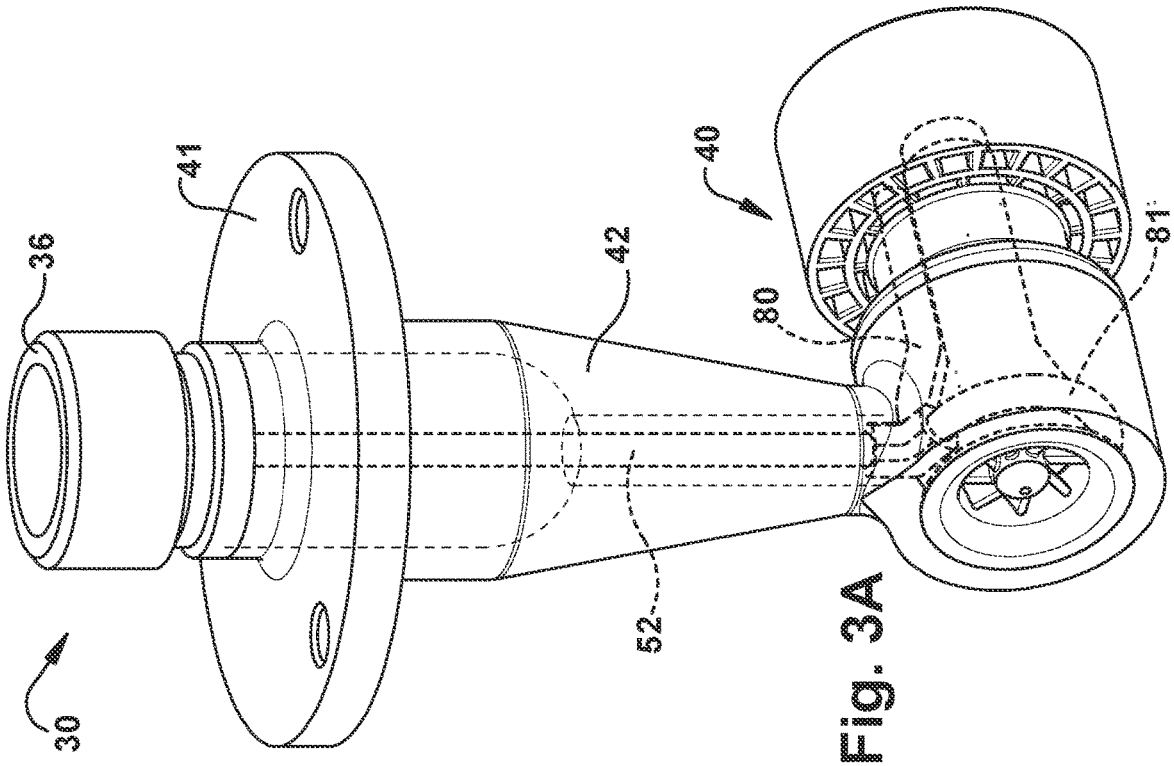

Fig. 3A

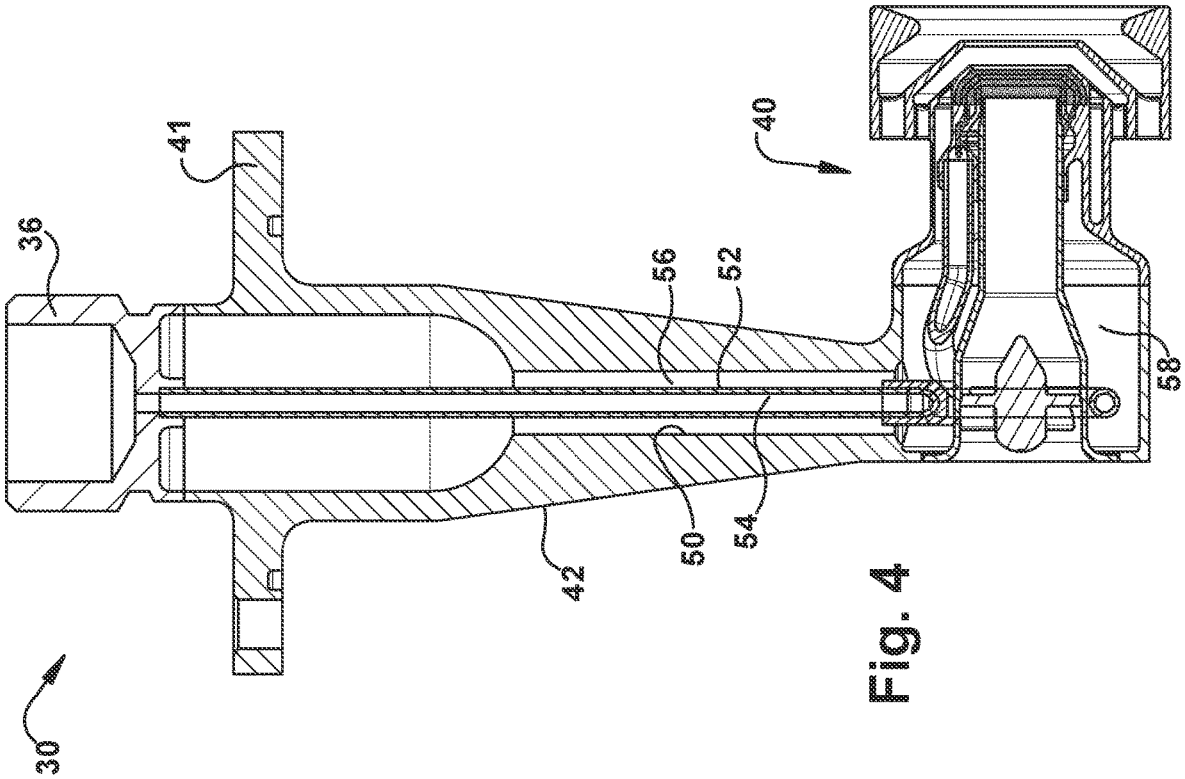

Fig. 4

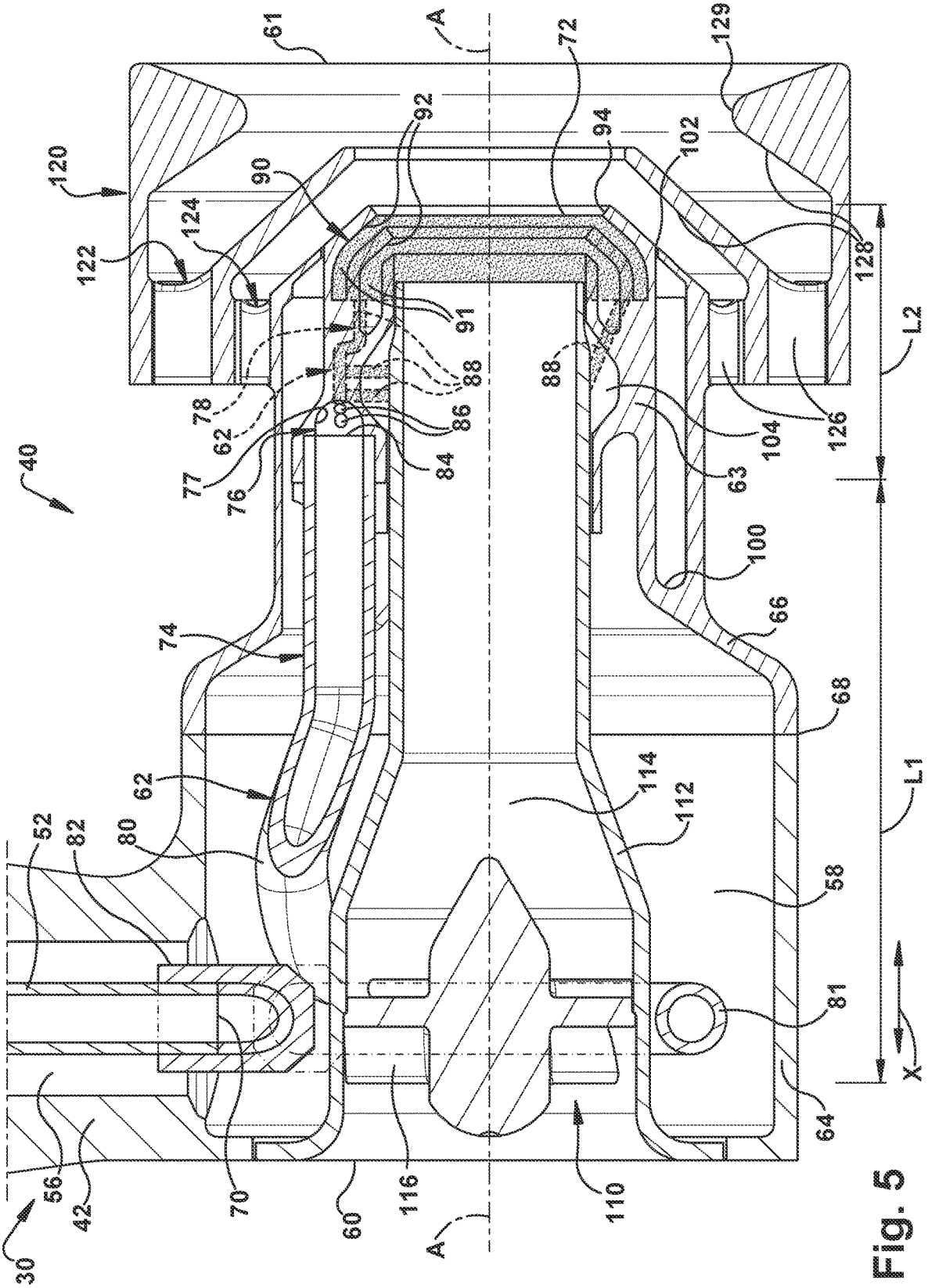
61
A
72
129
92
94
102
120
90
124
122
128
L2
91
88
88
78
62
86
104
126
40
77
76
84
63
100
74
66
68
62
114
112
L1
52
82
80
58
81
X
64
56
42
70
60
116
110
A
30

Fig. 5

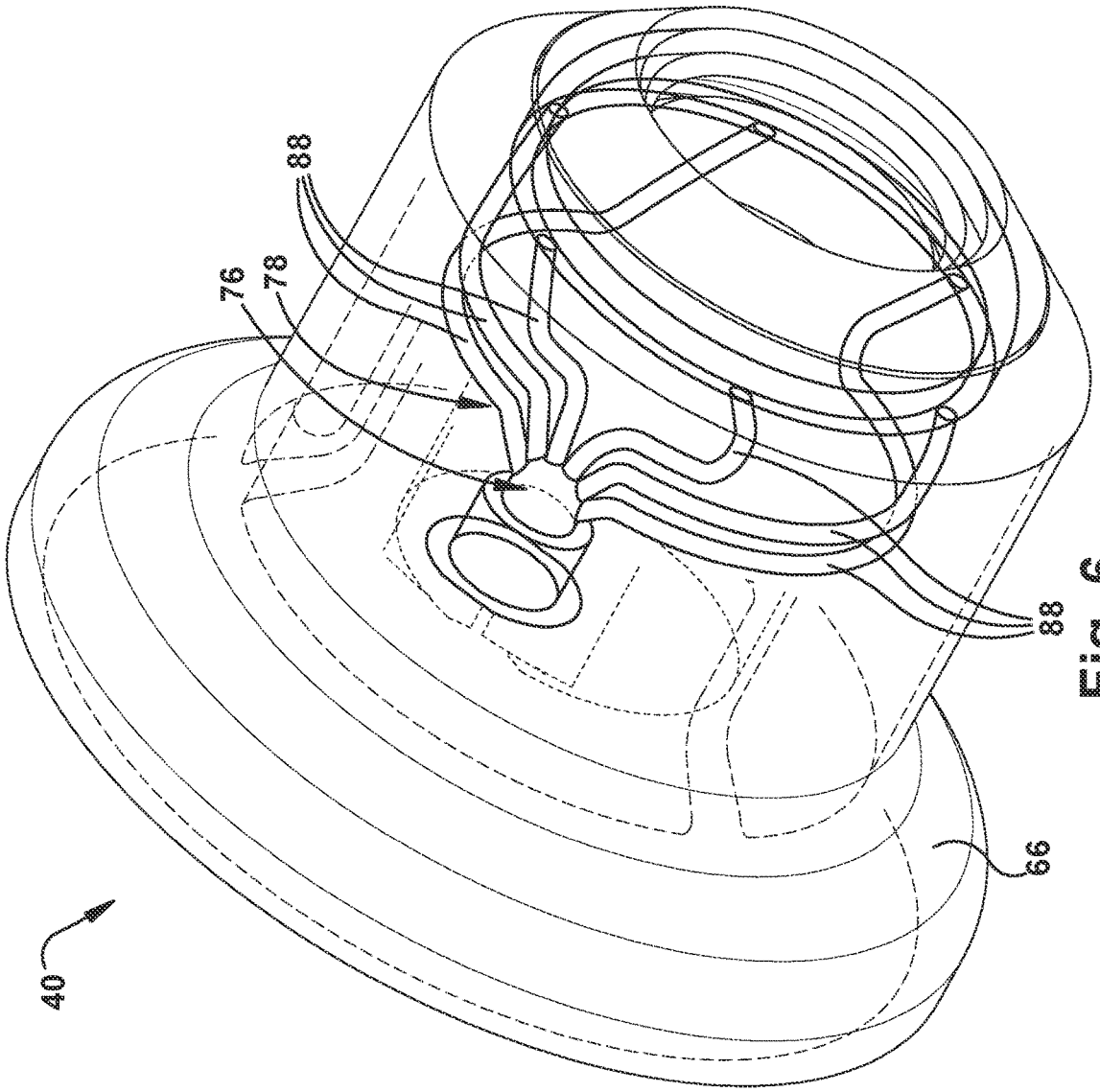

Fig. 6

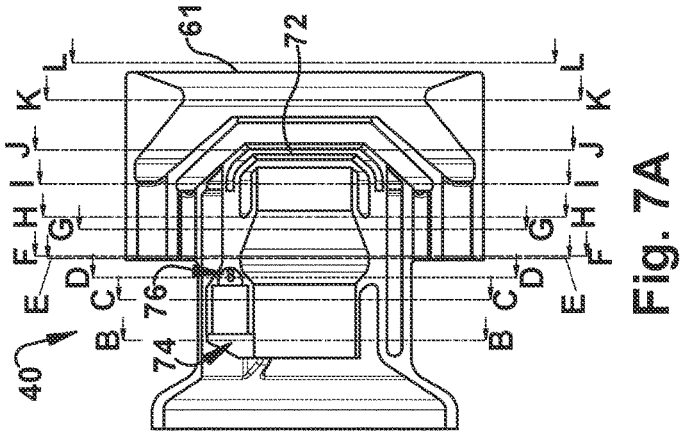

Fig. 7A

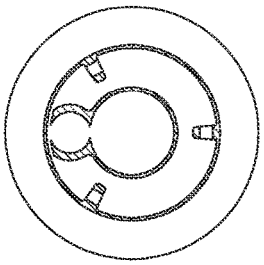

Fig. 7B

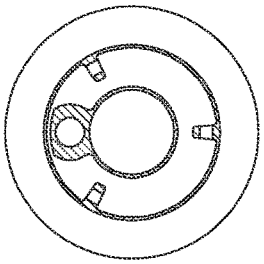

Fig. 7C

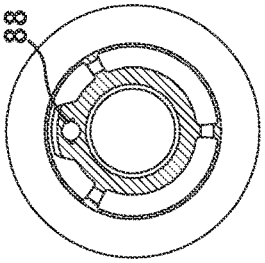

Fig. 7D

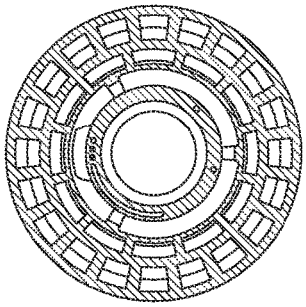

Fig. 7E

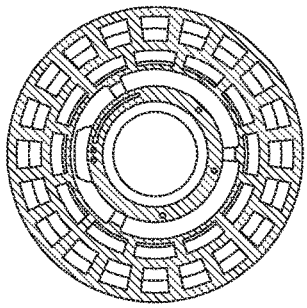

Fig. 7F

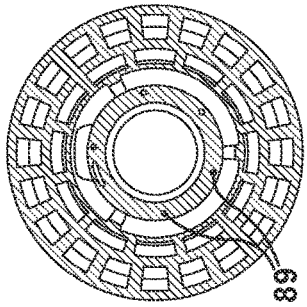

Fig. 7G

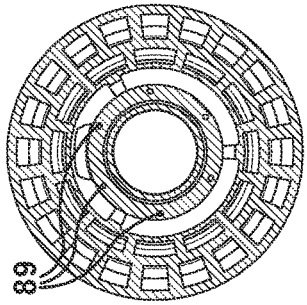

Fig. 7H

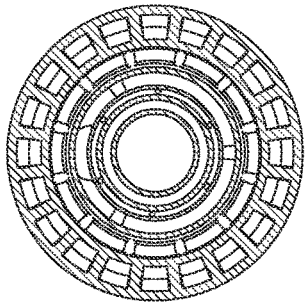

Fig. 7I

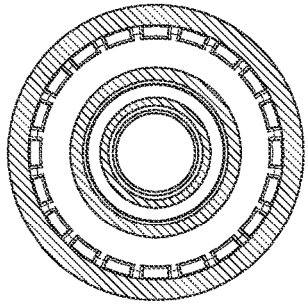

Fig. 7J

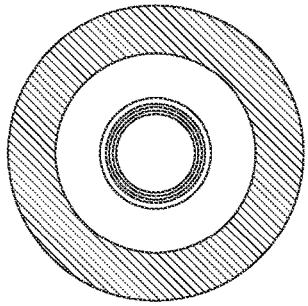

Fig. 7K

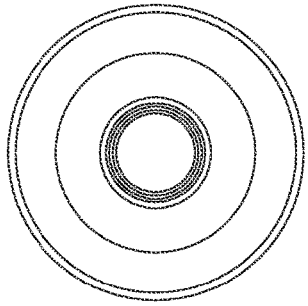

Fig. 7L

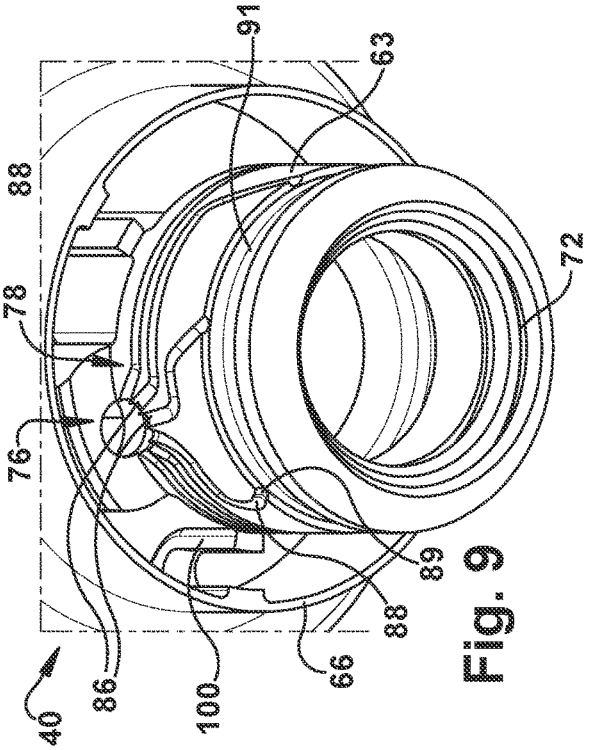

Fig. 9

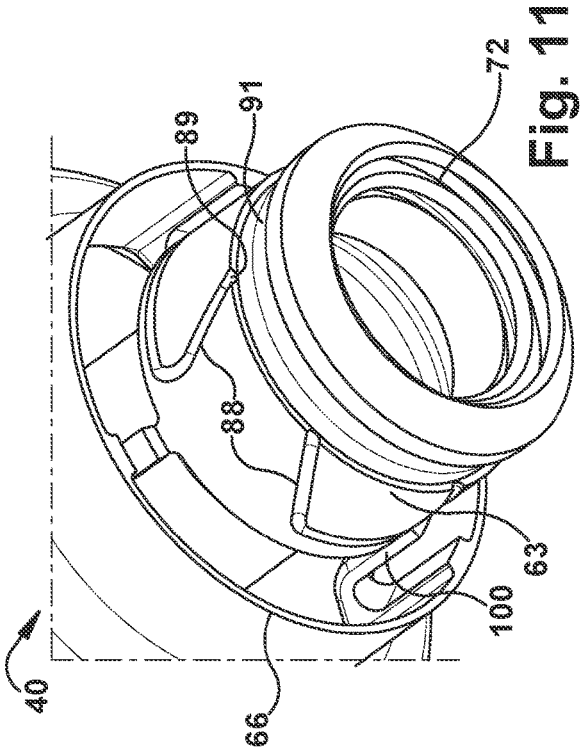

Fig. 11

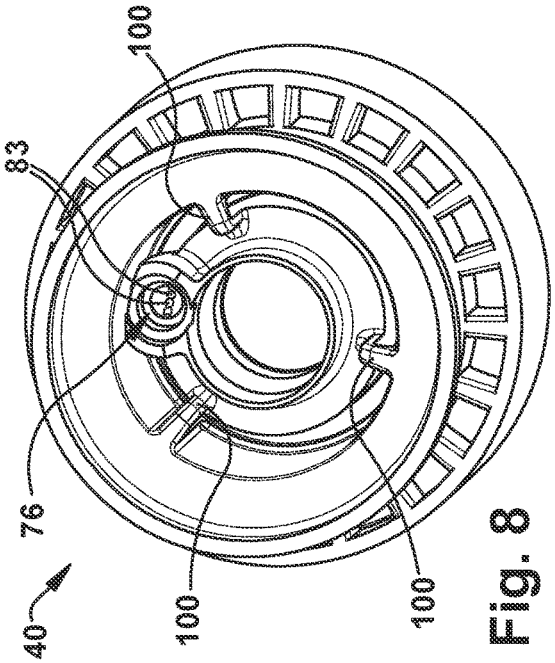

Fig. 8

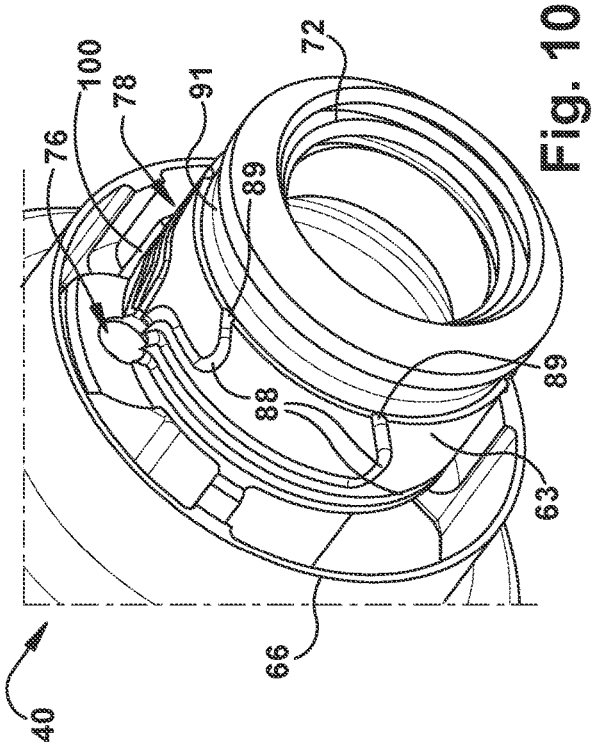

Fig. 10

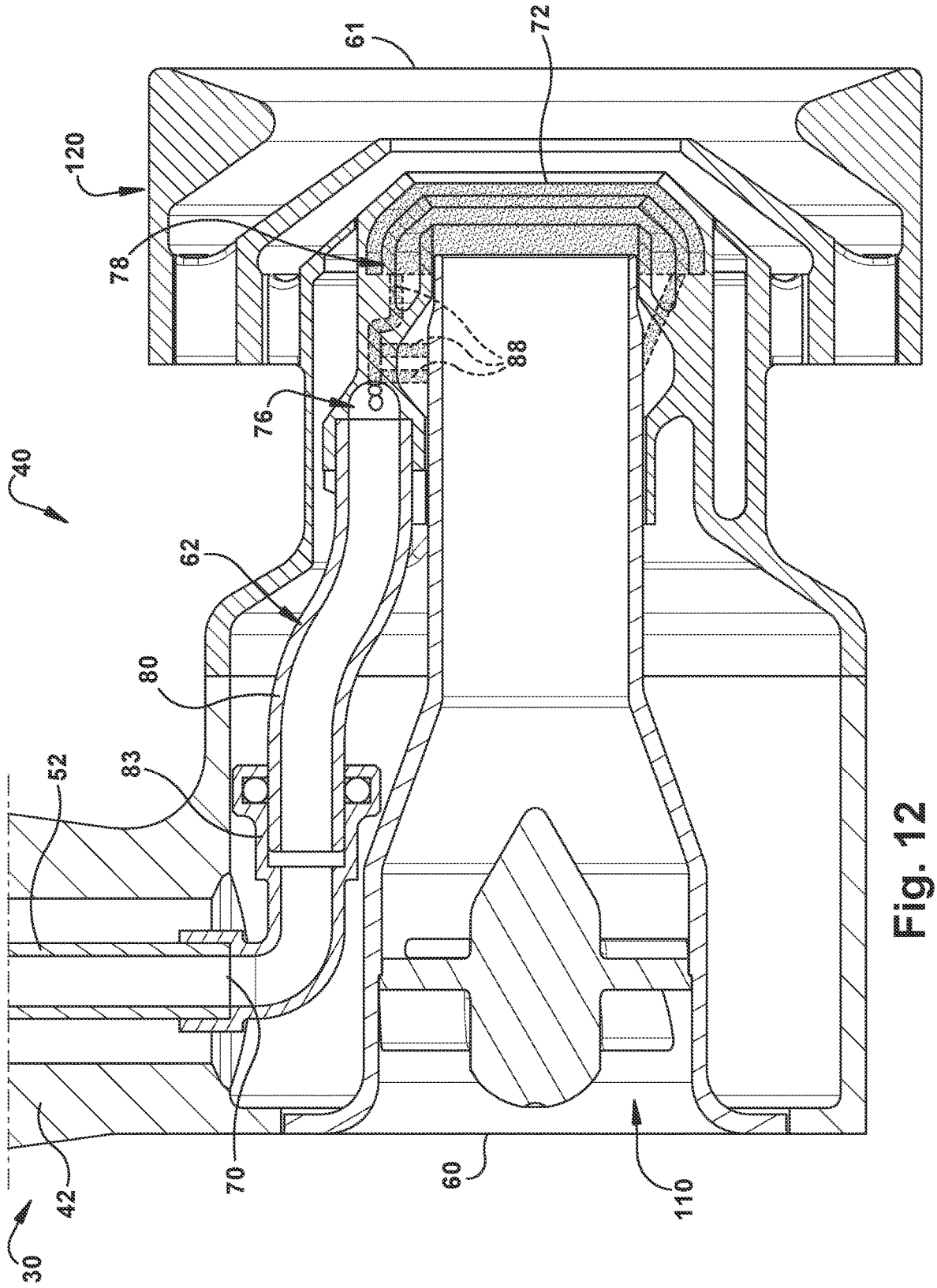

Fig. 12

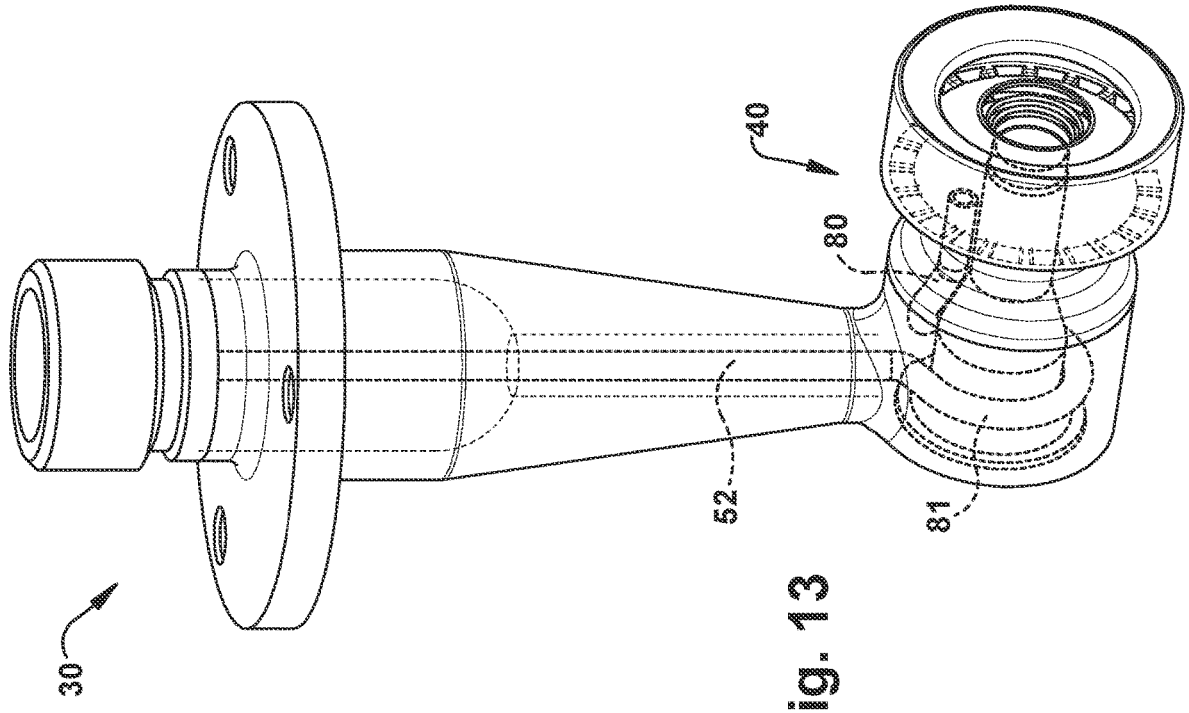

Fig. 13

AIRCRAFT FUEL NOZZLE

RELATED APPLICATIONS

[0001] This application claims the benefit of U.S. Provisional Application No. 63/084,591 filed Sep. 29, 2020, which is hereby incorporated herein by reference in its entirety.

TECHNICAL FIELD

[0002] The present disclosure relates generally to turbine engines, and more particularly to fuel injectors having fuel nozzles for turbine engines, such as an airblast-type fuel nozzle.

BACKGROUND

[0003] A turbine engine typically includes an outer casing extending radially from an air diffuser and a combustion chamber. The casing encloses a combustor for containment of burning fuel. The combustor includes a liner and a combustor dome, and an igniter is mounted to the casing and extends radially inwardly into the combustor for igniting fuel.

[0004] The turbine also typically includes one or more fuel injectors for directing fuel from a manifold to the combustor. Fuel injectors also function to prepare the fuel for mixing with air prior to combustion. Each injector typically has an inlet fitting connected either directly or via tubing to the manifold, a tubular extension or stem connected at one end to the fitting, and one or more spray nozzles connected to the other end of the stem for directing the fuel into the combustion chambers. A fuel passage (e.g., a tube or cylindrical passage) extends through the stem to supply the fuel from the inlet fitting to the nozzle. Appropriate valves and/or flow dividers can be provided to direct and control the flow of fuel through the nozzle. The fuel injectors are often placed in an evenly-spaced annular arrangement to dispense (spray) fuel in a uniform manner into the combustion chamber. Additional concentric and/or series combustion chambers may each include their own arrangements of nozzles that can be supported separately or on common stems. In an air-blast nozzle-type, the fuel provided by the injectors is mixed with air and ignited, so that the expanding gases of combustion can, for example, move rapidly across and rotate turbine blades in a gas turbine engine to power an aircraft, or in other appropriate manners in other combustion applications.

SUMMARY

[0005] One problem that generally persists with conventional aircraft fuel nozzles is heat transfer from the ambient environment to the fuel passing through the nozzle. This may cause the fuel to break down into its constituent components and cause coking deposition within the fuel passages of the nozzle. The coke in the fuel passages of the fuel injector can build up to restrict fuel flow to the nozzle.

[0006] Conventional nozzle designs tend to manage thermal energy transfer to the fuel by using heat shields or by transferring the thermal energy through intentionally long thermal paths that can reduce wetted wall temperatures and heat pick-up in the fuel. However, as the trend toward more efficient gas turbine engines continues to increase combustor temperatures, the use of such solutions appears to be reaching their limits. Moreover, the use of such additional heat shields or extra material for thermal path lengths increases the weight of the nozzles, which generally is disadvantageous in aircraft design.

[0007] An aspect of the present disclosure provides a unique fuel injector having particular application in an aircraft gas turbine engine, and more particularly, a unique fuel nozzle that reduces fuel temperatures and/or thermal stresses compared to a conventional design.

[0008] According to one aspect, the unique fuel nozzle is configured to transport bulk fuel flow further along the nozzle before being split or spread downstream in the fuel circuit for final spray distribution. The transport of bulk fuel flow downstream within the fuel nozzle reduces the surface area (and more particularly the surface area to volume ratio) of fuel exposed to heat transfer at points along this section of the fuel circuit, which promotes lower fuel temperatures and reduces the possibility of coking.

[0009] More particularly, according to an aspect, a fuel injector includes: a housing stem; a fuel nozzle operatively coupled to the housing stem, the fuel nozzle extending in a longitudinal direction between an upstream end and a downstream discharge end of the fuel nozzle, the fuel nozzle comprising a fuel circuit having an inlet section and an outlet section; and a fuel conduit extending through the housing stem into the fuel nozzle to form the inlet section of the fuel circuit, and extending through the fuel nozzle in the longitudinal direction toward the downstream discharge end to form an upstream portion of the fuel circuit; wherein the fuel conduit is configured to provide bulk fuel flow through the housing stem and the upstream portion of the fuel circuit, the fuel conduit fluidly connecting downstream to a fuel manifold located at an intermediate longitudinal position in the fuel nozzle between the upstream end and the downstream discharge end, the fuel manifold being configured to split the bulk fuel flow into a plurality of fuel flow passages in a downstream portion of the fuel circuit for fuel distribution through the outlet section and fuel discharge from the fuel nozzle.

[0010] According to another aspect, the unique fuel nozzle reduces high thermal conductivity contact paths between an external wall of the nozzle in thermal communication with ambient environment and an internal portion of the nozzle in thermal communication with the fuel circuit. Such a design promotes a reduction in the heat pick-up in the fuel and can thus promote lower wetted wall temperatures.

[0011] More particularly, according to an aspect a fuel injector includes: a housing stem; a fuel nozzle operatively coupled to the housing stem, the fuel nozzle including an internal wall in heat transfer relation with fuel flowing through the nozzle, and an external wall in heat transfer relation with ambient environment; wherein the internal wall and the external wall are coupled together via a plurality of legs that are circumferentially spaced apart from each other about a longitudinal axis of the fuel nozzle for minimizing thermal conduction and heat pick-up in the fuel.

[0012] According to another aspect, the unique fuel injector is configured to minimize stresses caused by thermal growth mismatches in different regions of the fuel flow path.

[0013] More particularly, according to an aspect a fuel injector includes: a housing stem; a fuel nozzle operatively coupled to the housing stem, the fuel nozzle extending in a longitudinal direction between an upstream end and a downstream discharge end of the fuel nozzle; and a fuel tube extending through the housing stem into the fuel nozzle;

wherein the fuel tube includes a coiled section contained within a portion of the fuel nozzle for compensating for thermal growth mismatches of the fuel injector.

[0014] The following description and the annexed drawings set forth certain illustrative embodiments of the invention. These embodiments are indicative, however, of but a few of the various ways in which the principles of the invention may be employed. Other objects, advantages and novel features according to aspects of the invention will become apparent from the following detailed description when considered in conjunction with the drawings.

BRIEF DESCRIPTION OF THE DRAWINGS

[0015] FIG. **1** is a cross-sectional view of a portion of an exemplary gas turbine engine illustrating a fuel injector in communication with a combustor.

[0016] FIG. **2** is a cross-sectional side view of a conventional fuel injector and nozzle that may be used in the gas turbine engine in FIG. **1**.

[0017] FIG. **3**A is a partially transparent perspective rear view of an exemplary fuel injector including an exemplary fuel nozzle according to the present disclosure which may be used in the gas turbine engine in FIG. **1**. FIG. **3**B is a partially transparent front perspective view thereof.

[0018] FIG. **4** is a cross-sectional side view of the fuel injector in FIGS. **3**A and **3**B.

[0019] FIG. **5** is an enlarged cross-sectional side view of the fuel injector in FIG. **4**.

[0020] FIG. **6** is a perspective transparent view of a portion of the fuel nozzle in FIG. **4** showing downstream flow passages.

[0021] FIG. **7**A shows a cross-sectional side view of the fuel nozzle in FIG. **4** and FIGS. **7**B-**7**L show frontal cross-sections at various axial depths according to FIG. **7**A.

[0022] FIG. **8** is a rear perspective view of a portion of the nozzle showing an exemplary fuel manifold.

[0023] FIGS. **9-11** are front perspective views of a portion of the nozzle with an outer wall removed from view and the wall containing fuel flow passages broken away to show the internal flow paths of the fuel flow passages.

[0024] FIG. **12** is an enlarged cross-sectional side view of another embodiment of the fuel injector.

[0025] FIG. **13** is front perspective view of another embodiment of the fuel injector.

DETAILED DESCRIPTION

[0026] The principles and aspects according to the present disclosure have particular application to fuel injectors and nozzles for gas turbine engines, such as airblast fuel nozzles, and thus will be described below chiefly in this context. It will of course be appreciated, and also understood, that the principles and aspects according to the present disclosure may be useful in other applications including other fuel nozzle applications, or more generally applications where a fluid is injected by a nozzle, especially under high-temperature conditions.

[0027] Referring to FIG. **1**, a portion of a gas turbine engine **10** for an aircraft is shown. The portion of the gas turbine engine **10** generally includes an outer casing **12** extending forwardly of an air diffuser **14**. The casing **12** and diffuser **14** enclose a combustor **20** for containment of burning fuel. The combustor **20** includes a liner **22** and a combustor dome **24**. An igniter **25** is mounted to the casing **12** and extends inwardly into the combustor **20** for igniting fuel. The above components can be conventional in the art and their manufacture and fabrication are well known.

[0028] A fuel injector **30** is received within an aperture **32** formed in the engine casing **12** and extends inwardly through an aperture **34** in the combustor liner **22**. The fuel injector **30** includes a fitting **36** exterior of the engine casing **12** for receiving fuel, such as by connection to a fuel manifold or fuel line (not shown); a fuel nozzle **40** disposed within the combustor **20** for dispensing fuel; and a housing stem **42** interconnecting and structurally supporting the fuel nozzle **40** with respect to fitting **36**. The fuel injector **30** is suitably secured to the engine casing **12**, such as via an annular flange **41** that may be formed in one piece with the housing stem **42** proximate the fitting **36**. The flange **41** extends radially outward from the housing stem **42** and includes appropriate means, such as apertures, to allow the flange **41** to be easily and securely connected to, and disconnected from, the casing **12** of the engine using, for example, fasteners, such as bolts or rivets. The housing stem **42** has a thickness sufficient to support the fuel nozzle **40** in the combustor when the injector is mounted to the engine, and is formed of material appropriate for the particular application.

[0029] Turning to FIG. **2**, a conventional fuel injector **530** including a conventional airblast-type fuel nozzle **540** is shown, which generally may be placed in a turbine engine at the same location as the above-described fuel injector **30**. As shown, the conventional fuel injector **530** includes a housing stem **542** that contains a fuel conduit **552**, such as a fuel feed tube, that fluidly interconnects a fitting and the conventional fuel nozzle **540**. The conventional fuel nozzle **540** includes an inner air swirler **558**, an outer air swirler **560** outwardly surrounding the inner air swirler, and a fuel circuit portion **562** that forms a fuel flow path radially between the inner air swirler **558** and the outer air swirler **560**. In the conventional fuel nozzle **540**, the fuel circuit portion **562** includes an annular region between a radially outer fuel wall **565** and a radially inner fuel wall **567**, which allows fuel to surround an axis (A) of the nozzle **540** as it flows toward a prefilmer section **580** at the end of the nozzle.

[0030] As shown in the conventional design, to reduce the amount of heat pick-up in the fuel flowing through the fuel circuit portion **562**, the conventional nozzle **540** is designed with intentionally long thermal path lengths (shown with thermal gradient arrows, T, in the illustration) formed by radially an outer shroud **564** in thermal communication with ambient environment (E) (commonly referred to as the compressor exit temperature). As is apparent, the use of such extra material for increasing the thermal path lengths increases the weight of the conventional nozzle **540**, which generally may be disadvantageous for aircraft design.

[0031] Also as shown in the conventional design, an end of the fuel conduit **552** extending from the housing stem **542** connects to an inlet section **563** of the fuel circuit portion **562**, where the bulk fuel flow through the conduit **552** gets spread around an annular upstream portion **569** of the fuel circuit **562**. As the trend toward more efficient gas turbine engines continues to increase compressor exit and combustor temperatures while incorporating lower fuel flows, this higher surface area and/or reduced surface area to volume ratio of spread fuel flow in the conventional nozzle **540** can lead to increased heat pick-up in the fuel, which can increase wetted wall temperatures and can potentially lead to coking

of the fuel. In addition, during such higher temperature engine operation, the housing stem **542** may tend to thermally grow radially within the engine casing (designated by double-arrow Y) while the fuel nozzle **540** may tend to thermally grow axially (designated by double-arrow X), whereas cooling provided by the fuel may tend to cause the fuel conduit **552** to not thermally grow as much, which can lead to thermal stresses in the fuel circuit of the conventional design.

[0032] The exemplary fuel injector **30** and fuel nozzle **40** described herein solve one or more of these potential issues with the conventional design **530**, **540** by providing inter alia a unique configuration that reduces fuel temperatures internal to the nozzle, transports bulk fuel flow downstream within the fuel nozzle to promote lower fuel temperatures, minimizes high thermal conductivity contact paths between an annular outer shroud of the nozzle and the fuel circuit to promote lower fuel temperatures, reduces mass of the fuel nozzle, and/or minimizes stresses caused by thermal growth mismatches in different regions of the fuel flow path.

[0033] Turning particularly to FIGS. **3-5**, the exemplary fuel injector **30** and the exemplary fuel nozzle **40** (also referred to as a tip of the fuel injector, or a fuel nozzle tip) are shown in further detail. As shown, the housing stem **42** may include a central, longitudinally-extending passage **50** extending the length of the housing stem **42**. One or more fuel conduits **52** may extend through the passage **50** and fluidly interconnect fitting **36** and fuel nozzle **40**. The conduit(s) **52** may be formed by any suitable structure(s) that provide(s) one or more fluid passages for transporting the fuel. In the illustrated embodiment, the fuel conduit **52** is formed as a tube which may be made of a suitable material (e.g., metal) and includes an internal passage **54** for the passage of fuel. As shown, the fuel conduit **52** is surrounded by the housing stem **42**, and an annular insulating gap **56** is provided between the external surface of the fuel conduit **52** and the walls of the housing stem **42** forming the passage **50**. The insulating gap **56** generally provides thermal protection for the fuel in the fuel conduit(s) **52** and may be in fluid communication with a corresponding insulating gap (or cavity) **58** in the fuel nozzle **40**, as described in further detail below.

[0034] As shown in greater detail in FIG. **5**, the fuel nozzle **40** extends along a longitudinal axis A between an upstream (rearward) end **60** and a downstream (forward/discharge) end **61** of the fuel nozzle. In the illustrated embodiment, the fuel nozzle **40** is an airblast-type and includes an inner air swirler portion **110** and an outer air swirler portion **120** outwardly surrounding the inner air swirler portion **110**. The fuel nozzle **40** also includes a fuel circuit portion **62** that transports fuel generally in the longitudinal downstream direction (X) toward the downstream (forward/discharge) end **61** of the nozzle **40** for final spray distribution, as described in further detail below.

[0035] In the illustrated embodiment, the lower end of the housing stem **42** forms a rearward portion of an annular outer shroud **64** of the nozzle **40**. This rearward portion of the outer shroud **64** may be connected at its downstream end to an annular wall **66** of a forward portion of the nozzle **40** that includes the outer air swirler portion **120**. In this manner, the annular outer wall **66** forms a continuation of the outer shroud (e.g., annular wall) **64** provided by the lower portion of the housing stem **42**. The connection may be made by any suitable means, such as by welding or brazing at a joint **68**. As shown, the outer annular shroud **64** and/or annular wall **66** each may be a single-wall structure that forms a heat shield and surrounds the inner air swirler portion **110** to enclose the insulating gap **58**. In the illustrated embodiment, the insulating gap **58** is formed as a relatively large cavity that protects the fluid circuit portion **62** extending therethrough from elevated temperatures. In exemplary embodiments, as noted above, this insulating gap **58** may be in fluid communication with the insulating gap **56** of the housing stem **42** to alleviate increasing temperatures.

[0036] The inner air swirler portion **110** (also referred to as inner air swirler **110**) has an inner annular wall **112** that bounds an air passage (duct) **114**. The annular inner wall **112** may act as a heat shield that extends centrally within the nozzle **40**. As shown, the air passage **114** includes an airflow inlet at the upstream (rearward) end **60** of the nozzle **40**, and discharges this internal airflow at a downstream end of the inner air swirler **110**. In exemplary embodiments, the annular wall **112** of the inner air swirler **110** has a streamlined geometry with the flow area of the air passage **114** decreasing in the direction of flow. This minimizes boundary layer growth and prevents boundary layer separation of the air flow. The inner air swirler **110** also includes radially-extending vanes **116** for directing and swirling airflow downstream through the passage **114**.

[0037] The outer air swirler portion **120** (also referred to as outer air swirler **120**) may extend radially outwardly relative to the annular outer wall **66** of the forward portion of the nozzle **40**. As shown in the illustrated embodiment, the outer air swirler **120** may include a first outer air swirler portion **122** and a second outer air swirler portion **124**, in which the first (dome) air swirler portion **122** is located radially outward of the second (inner) air swirler portion **124**. Each portion **122**, **124** of the outer air swirler **120** may include a plurality of vanes **126** and an airflow guide surface **128** tapered radially inwardly to direct airflow in a swirling and converging manner toward the central axis A and toward the downstream end **61** of the fuel swirler. In exemplary embodiments, the vanes **126** are helical, curved or angled vanes. The respective vanes **126** of each portion **122**, **124** may be configured to provide co-rotating or counter-rotating air flows of the first outer air swirler portion **122** relative to the second outer air swirler portion **124**. The vanes **126** can vary to increase/decrease the direction, speed, or volume of airflow depending upon the particular application. As shown, the (inner) portion **124** of outer air swirler may include an annular, inwardly tapered (frustoconical) downstream end, which may provide the primary outer air flow for atomization of the fuel at the discharge end. The (outer/dome) portion **122** of outer air swirler may include an annular bulbous portion **129**, which may provide good spray patternation and droplet dispersion. It is understood that although two air swirler portions **122**, **124** are shown, the nozzle may include a fewer or greater number of such portions.

[0038] The fuel circuit portion **62** (also referred to as the fuel circuit **62**) generally includes an upstream inlet section **70** where fuel enters the nozzle **40**, and a downstream outlet section **72** where fuel is distributed from the fuel circuit **62** for being discharged from the nozzle **40**. In exemplary embodiments, the fuel circuit **62** internal to the nozzle **40** is configured to transport bulk fuel flow from the fuel conduit **52** in the housing stem **42** through the inlet section **70** of the fuel circuit **62** and downstream in the longitudinal (X)

direction from an upstream portion **74** of the fuel circuit **62** to a transition section **76** of the fuel circuit **62**, where the bulk fuel flow is then split into a downstream portion **78** of the fuel circuit **62** for final spray distribution. This transportation of bulk fuel flow downstream within the fuel nozzle **40** reduces the surface area (and more particularly the surface area to volume ratio) of fuel exposed to heat transfer at points along the upstream portion **74** of the fuel circuit **62**, which thereby promotes lower fuel temperatures and reduces the possibility of coking in the fuel circuit **62**.

[0039] The inlet section **70** and/or upstream portion **74** of the fuel circuit **62** may be formed by any suitable fuel conduit or combination of conduits having one or more fluid passages configured to transport the bulk fuel. In exemplary embodiments, the fuel circuit upstream portion **74** is formed by at least one fuel conduit section **80** that is a continuation of the at least one fuel conduit **52** extending through the housing stem **42**. Such continuity provided between the fuel conduit **52** in the housing stem **42** and the fuel conduit section **80** in the fuel nozzle **40** may be seamless (e.g., a single conduit, such as a tube), or may be segmented (e.g., multiple conduit segments (e.g., tube segments) connected together with a fluid adapter or connector **82**). In such manner, a fuel conduit (e.g., conduit **52**) extending through the housing stem **42** is considered to extend into the fuel nozzle **40** (e.g., via separate fuel conduit section **80**) to form the fuel circuit inlet section **70**, and extends internally through the fuel nozzle **40** (e.g., via separate fuel conduit section **80**) to form the fuel circuit upstream portion **74** that provides bulk fuel flow to the transition section **76** at an intermediate axial position in the nozzle **40**.

[0040] In the illustrated embodiment, the upstream portion **74** of the fuel circuit **62** includes at least one fuel tube that constitutes the fuel conduit section **80**. The fuel tube (also referred to with reference **80**) may have any suitable structure for providing bulk fuel flow, such as a rigid metal tube. As shown, at least a portion of the fuel tube **80** extends axially through the insulating gap **58** toward the downstream end **61** of the nozzle **40** to connect with the transition section **76** of the fluid circuit **62** (described in further detail below). The fuel tube **80** may have one or more bends and/or one or more connectors **82** to provide fluid connection with the fuel conduit **52** on one side and the transition section **76** on the other side. As shown, at least a portion (preferably a majority) of the fuel tube **80** is spaced apart from the annular outer wall(s) **64**, **66** of the nozzle **40** to minimize heat transfer into the fuel. Suitable supports located at spaced apart positions along the fuel tube **80** also could be used to damp vibrations if desirable. Also as is apparent in the illustrated embodiment, and in contrast with the annular fuel passage (between outer and inner walls **565**, **567**) that circumscribes the axis of the conventional nozzle **540**, the fuel tube **80** of the exemplary nozzle **40** provides the bulk fuel at a concentrated region within the nozzle **40** (e.g., on one side of the axis A), thereby minimizing heat transfer from the 360-degrees of ambient environment surrounding the fuel nozzle **40**.

[0041] During high-temperature engine operation, the housing stem **42** may tend to thermally grow radially while the fuel nozzle **40** may tend to thermally grow axially, each or both of which may thermally grow by different amounts than the fuel conduit (tube) **52** and/or fuel conduit section (tube) **80**. To mitigate thermal stresses caused by such thermal mismatch, the fuel nozzle **40** may incorporate a coiled tube section **81** for compensating for such thermal growth mismatch. In exemplary embodiments, the coiled tube section **81** is formed as part the upstream portion **74** of the fuel circuit **62** internally to the nozzle **40**. In the illustrated embodiment, for example, the fuel conduit (tube) **52** is a straight tube that extends through the length of the housing stem **42**, and the coiled tube section **81** is located below the conduit **52** in the portion of the insulating gap **58** formed by the outer shroud **64**. The coiled tube section **81** may be at least partially circumscribed around the heatshield wall **112** of the inner air swirler **110** to provide suitable flow performance and adequate compensation for thermal growth mismatch. As shown, the coiled tube section **81** may be continuous (e.g., seamless) with the axially extending fuel conduit section **80**, such that these respective sections **80**, **81** of the upstream portion **74** are formed with the same tube. As such, in the illustrated embodiment, an end of the coiled tube section **81** of the fuel tube **80** is connected to the fuel conduit (tube) **52** via the connector **82**.

[0042] As described above, the bulk fuel flow provided by the upstream portion **74** of the fuel circuit **62** (e.g., conduit section **80**) may promote lower fuel temperatures by reducing the surface area to volume ratio of fuel flowing through this region of the fuel nozzle **40** as compared to the fuel flow provided by the downstream portion **78**. To provide such effect, the bulk fuel flow path provided by the upstream portion **74** generally may be concentrated, confined or "bulked" into a conduit section (e.g., conduit section or tube **80**) that is in an angular region on one side of the nozzle axis A as the fuel flows axially, and thus is not spread into an annular region that mostly or entirely encompasses the axis as is the case with the conventional nozzle **540** described above. Also as described above, the bulk fuel flow provided by the upstream portion **74** of the fuel circuit **62** (e.g., conduit section **80**) may promote lower fuel temperatures, by providing a major portion (e.g., majority or greater than 50%) of the upstream portion **74** (e.g., conduit section **80**) being spaced apart from the annular outer wall(s) **64**, **66** of the nozzle **40**, which thereby minimizes heat transfer into the fuel. In exemplary embodiments, the bulk fuel flow provided by the upstream portion **74** of the fuel circuit **62** and the bulk fuel flow provided by the fuel conduit **52** in the housing stem **42** have effectively the same bulk fluid flow characteristic(s), such as by mass or volumetric flow.

[0043] To maximize the benefit provided by the bulk fuel flow in the upstream portion **74** of the fuel circuit **62**, it generally may be advantageous to maximize the axial distance of such bulk fuel flow in the longitudinal direction of the nozzle **40**. This, however, is weighed against such factors as providing a suitable distance for the fuel circuit downstream portion **78** that will allow sufficient flow distribution to provide adequate spray performance (e.g., fine atomization, spray uniformity, spray angle, etc.). In exemplary embodiments, the axial distance (L1) provided by the fuel circuit upstream portion **74** that provides bulk fuel flow (including, for example, conduit section **80** and coil section **81**) is at least 30% or more of the overall axial distance (L1+L2) of the fuel circuit **62** (as measured from the axial location of the inlet section **70** (where fuel enters the nozzle **40**) to the axial location of the outlet section **72** (where fuel is distributed from the fuel circuit **62**). More particularly, the axial distance (L1) of the upstream portion **74** providing bulk fuel flow may be in a range from 30% to 99% of the overall axial distance (L1+L2) of the fuel circuit **62** (such as 30%, 40%, 50%, 60%, 70%, 80%, 90%, or 99%, including

all values and subranges between the stated values). The fuel circuit downstream portion **78** which constitutes the split fuel flow may have an axial distance (L2) that is the balance of the overall fuel circuit axial distance (L1+L2), for example.

[0044] The transition section **76** of the fuel circuit **62** may be any suitable structure or combination of structures configured to split the bulk fuel flow from the upstream portion **74** into the downstream portion **78** of the fuel circuit **62**. Likewise, the split fuel flow may be provided in any suitable manner by any suitable structure(s), such as by branching the fuel into multiple passages, or the like. Generally, such split fuel flow caused by the transition section **76** will have different fluid flow characteristic(s) (e.g., velocity, pressure, etc.) and/or different thermal absorption characteristic(s) at points along the downstream portion **78** as compared to the bulk fuel flow at points along the upstream section **74**. For example, splitting the fuel flow generally may increase the surface area of the fuel exposed to temperature at points along the wetted wall of the downstream flow path, may reduce the volume of fuel along such points, and/or may reduce the surface area to volume ratio of fuel along such points. The transition section **76** generally will be the first section along the fuel circuit **62** that provides a split in fuel flow among multiple passages that causes a significant change in the fluid flow and/or thermal absorption characteristics of the fuel when comparing the upstream portion **74** to the downstream portion **78**.

[0045] Still referring to FIG. **5**, and also now to FIG. **6**, the illustrated embodiment shows that the transition section **76** of the fuel circuit **62** includes a fuel manifold (also referenced with **76**). As shown, the fuel manifold **76** includes at least one inlet opening **84** configured to fluidly connect to the upstream portion **74** (e.g., conduit section **80**), and a plurality of outlet openings **86** that respectively fluidly connect to a plurality of fuel flow passages **88** of the downstream portion **78**. The fuel manifold **76** may be formed within a body portion **63** (or internal wall) of the fuel nozzle **40** (as shown), such as via an additive manufacturing process. In the illustrated embodiment, the inlet opening **84** is formed via a cylindrical wall that is configured to receive a downstream end of the fuel tube **80**. The outlet openings **86** (inlets to the fuel flow passages **88**) open to an internal chamber **77** which has a domed or spherical shape in the illustrated embodiment. The size and/or shape of the internal chamber **77** (and/or the shape, size and/or locations of the openings **86**) may be configured to reduce pressure drop, promote even flow distribution through the flow passages **88**, and/or minimize residence time of the fuel in the manifold **76**, which therefore may improve spray performance and minimize the potential for coking.

[0046] Referring to FIGS. **6-11**, and also FIG. **5**, the downstream portion **78** of the fuel circuit **62** is shown in further detail. In FIGS. **9-11**, the outer wall **66** (see FIG. **5**) is removed from view and the wall containing the fuel flow passages **88** is broken away to show the internal flow paths of the fuel flow passages **88** enclosed by the body portion **63** of the fuel nozzle **40**. As shown, each of the fuel flow passages **88** having their respective inlet ends (openings **86**) fluidly connected to the manifold **76** extend downstream to respective outlet ends (openings **89**) for fluidly connecting with the outlet section **72** of the fuel circuit **62**. In this manner, each of the fuel flow passages **88** can be described by a flow path having a flow direction and a flow area along the length of the fuel passage between its inlet opening **86** and outlet opening **89**. In the illustrated embodiment, each of the fuel flow passages **88** extends in its flow path direction with changing directions to minimize flow disruptions, restrict boundary layer growth and/or reduce pressure drop as the fuel flows from the fuel manifold **76** to the outlet section **72**. The directions of the passages **88** also may be configured to minimize heat pick-up from high thermal conductivity (e.g., metal-to-metal) contact regions, as described in further detail below. As shown, because the inlet openings **86** may open into a single manifold **76** on one side of the nozzle **40** while the outlet openings **89** may be circumferentially spaced apart, the respective fuel passages **88** may be non-parallel with respect to each other, and may be non-linear, curved flow paths that extend downstream along the fuel nozzle body.

[0047] In the illustrated embodiment, each of the fuel flow passages **88** has a cross-sectional area (transverse to a direction of fluid flow) that is less than a cross-sectional area (transverse to a direction of fluid flow) of fuel conduit section (e.g., tube) **80** that is part of the fuel circuit upstream portion **74**. This enables fuel velocity to increase as it passes through the smaller passages **88** toward the outlet section **72**, which improves spray performance. As noted above, however, such split fuel flow provided by the passages **88** in the downstream portion **78** may increase the outer surface area to volume ratio of fuel at points in the downstream portion **78** compared to the upstream portion **74**, which may increase heat pick-up in the fuel in this downstream portion **78**. By way of non-limiting example, in the illustrated embodiment, six fuel passages **88** are provided, each of which have an outer surface area at the wall that is 25% the surface area per 1 mm axial length as compared to the outer surface area per 1 mm axial length of the wall of the fuel tube. This gives a total surface area of the six fuel passages per 1 mm axial length that is 50% greater than the surface area per 1 mm axial length of the wall of the fuel tube **80**. Accordingly, as described above, it generally may be beneficial to extend the bulk fuel flow (or minimize the split or spread fuel flow) as much as possible while still enabling good spray performance from the nozzle **40**.

[0048] FIGS. **7A-7L** shows one example according to the illustrated embodiment of minimizing the axial length of the downstream portion **78** to minimize heat pick-up in the fuel. As shown in FIGS. **7A-7L**, frontal cross-sections of the nozzle **40** at various axial depths demonstrates that the bulk fuel flow does not split into the plurality of flow paths **88** until about 13 mm (FIG. **7D**) from discharge end **61** (at 0 mm) of the nozzle, as measured along a central axis of the nozzle **40**. Again, this delaying of the split point of the fuel paths promotes a reduction in heat pick-up in the fuel. It is of course understood that the illustrated configuration is exemplary, and that the axial split point may be at other depths in other examples of the nozzle.

[0049] Turning again to FIGS. **9-11**, the outlet openings **89** (also referred to as outlets **89**) of the fuel passages **88** open into an annulus **91** at the outlet section **72** of the fuel circuit. As shown best shown in FIG. **7H** (at 6 mm, for example), the outlets **89** of the fuel passages **88** may be arranged in an annular, evenly spaced apart array around the entire circumference of the outlet section **72** such that fuel may be sprayed uniformly by the nozzle **40**. In exemplary embodiments, the outlets **89** of the fuel passages **88** may be inclined at an angle, such as 45-degrees, relative to a plane perpendicular

to the longitudinal axis A of the body portion **63**, and are also inclined in the circumferential direction around the longitudinal axis A, so as to provide the fuel with a swirling component of motion as it is discharged into the annulus **91** (also referred to as a swirl annulus **91**).

[0050] The particular angle of the outlets **89** may vary depending upon the desired swirl for the fuel and/or the geometry of the outlets **89** may vary to tune the flow therethrough to ensure equal pressure drop through each outlet **89**. In exemplary embodiments, each of the outlets **89** of the fuel passages **88** is configured as a metering slot **89** (with the same reference numeral **89** used to refer to both the outlet opening and metering slot for clarity). The metering slots **89** may be configured to meter the amount of fuel flowing through the passages **88** and/or direct the fuel at the discharge end **61** in a particular manner. The metering slots **89** may thus provide improved flow uniformity as the fuel is discharged from the fuel circuit **62**, which may reduce recirculation zones and hot spotting, thereby improving the lifespan of the turbine. The metering slots **89** may have a cross-sectional area that is the same as or that is different from the cross-sectional area of the fuel passage **88**. In addition, although each of the metering slots **89** is shown with the same cross-sectional area, and each is shown angled and oriented in the same direction, it is understood that one or more of the metering slots **89** may have different cross-sectional areas, angles, or orientations from other one(s) of the metering slots. Such differing configurations may be used to increase/decrease the amount of swirling of the fuel and/or to increase/decrease the velocity of the fuel exiting the orifices for staging the fuel, as may be desired for particular applications.

[0051] In exemplary embodiments, the swirl annulus **91** is part of a prefilmer **90** which such construction may be well-known in the art. In the illustrated embodiment, for example, the outlets **89** (e.g., metering slots) of the fuel passages **88** all open into an upstream edge of the swirl annulus **91** and provide a swirling motion of flow to direct fuel towards a tapered portion **92** of the prefilmer **90**. The swirling and radially inwardly directed fuel in the prefilmer **90** is then discharged from the outlet section **72** of the fuel circuit **62**.

[0052] As shown, the prefilmer **90** is disposed downstream of the inner air swirler **110** and upstream of the outer air swirler **120**. The downstream tapered portion **92** of the prefilmer **90** may assist the fuel in forming a thin, continuous sheet across the prefilmer surface, and in accelerating the fuel as the fuel passes downstream along the surface. The aerodynamic drag forces from the air/fuel interface may accelerate the fuel, to assist distributing the fuel evenly in a thin sheet across the prefilmer surface. The air flow from the inner air swirler **110** passes inwardly of the fuel streams to form a swirling, inner air flow centrally of the fuel sheet to aid the atomization of the fuel downstream from the prefilmer discharge end **94**. In the illustrated embodiment, the discharge end **94** of the prefilmer **90** is the axial end (outlet section **72**)) of the fuel circuit **62**. As the fuel sheet releases from the downstream lip of the prefilmer surface at the discharge end **94**, the sheet is impacted by the converging air from the outer air swirler **120** (e.g., including first air swirler portion **122** and second air swirler portion **124**), and the inner air flow provided by the inner air swirler **110**. As a result, a fairly significant velocity gradient is established at the prefilmer lip that results in a high shear rate at the locations where the incoming fuel streams impinge. The sheet is quickly atomized into a fine dispersion, and is evenly distributed in a conical spray. This enables the nozzle **40** to provide good spray performance, a wide spray angle, and improved spray uniformity with essentially no streaks, voids or non-homogeneities.

[0053] Alternatively or additionally to the foregoing benefits provided by expanding bulk fuel flow in the nozzle **40**, the exemplary fuel nozzle **40** may include one or more additional features that promote a reduction in the heat pick-up in the fuel and can thus promote lower wetted wall temperatures.

[0054] For example, referring again to FIG. **5** and also to FIGS. **7-11**, the exemplary fuel nozzle **40** may include a plurality of circumferentially spaced apart legs (or supports) **100** that operatively couple an external wall in heat transfer relation with ambient environment (e.g., outer wall **66** and/or **64**) to an internal wall in heat transfer relation with fuel flowing through the nozzle (e.g., body portion, or wall, **63**). As shown in the illustrated embodiment, the spaced apart legs **100** have open gaps therebetween, which minimizes material-to-material (e.g., metal-to-metal) contact between the external wall **66**, **64** of the nozzle and the fuel circuit **62**. This also reduces or eliminates 360-degree diametrical heat transfer as compared to the conventional design. The number of legs **100** also may be minimized to minimize metal-to-metal contact. For example, three equal-spaced legs **100** are provided in the illustrated embodiment, although fewer or greater legs **100** also could be employed. As noted above, the directions of the passages **88** also may be configured to minimize heat pick-up by avoiding close-proximity to the legs **100**.

[0055] The exemplary fuel nozzle **40** also may have an annular gap **102** where the external wall **64**, **66** comes into proximity with the outlet section **72** of the fuel circuit **62** for the purpose of reducing metal-to-metal contact and heat transfer with the fuel circuit. In such a configuration, the circumferentially spaced apart legs **100** may be the primary or only supports between the external wall **64**, **66** and the body portion **63**.

[0056] The exemplary fuel nozzle **40** also may strategically locate thermal insulation pocket(s) **104** within the nozzle **40**. In the illustrated embodiment, for example, an annular pocket is formed around the inner heat shield wall **112** at the axial location corresponding with the downstream portion **78** of the fuel circuit. As described above, the relatively large internal insulating gap **58** (or cavity) also may be provided in the region between the external wall **64**, **66** and the body portion (wall) **63**. Such a configuration may enable the outer annular shroud (external wall) **64** to be a single wall structure, which may reduce weight of the nozzle.

[0057] Overall, the unique nozzle design may be configured to minimize heat pick-up into the fuel circuit as a result of metal-to-metal contact. In exemplary embodiments, the exit of the nozzle may be the only location having 360-degree metal-to-metal contact.

[0058] Turning to FIGS. **12** and **13**, alternative embodiments of the fuel injector **30** and fuel nozzle **40** are shown. These embodiments are substantially the same as the above-described fuel injector **30** and fuel nozzle **40**, and consequently the same reference numerals are used to denote structures corresponding to the same or similar structures. As such, the foregoing description of the fuel injector **30** and

fuel nozzle **40** in FIGS. **3-11** is equally applicable to the embodiments described in FIGS. **12-14**, except as noted below. Moreover, it will be appreciated that features and aspects from these different embodiments may be substituted for one another or used in conjunction with one another where applicable.

[0059] FIG. **12** shows an alternative embodiment in which the coil section **81** in the nozzle **40** is eliminated, and the vertically extending fuel conduit (e.g., tube) **52** in the housing stem **42** is joined via a bent section to an axially extending fuel conduit section (e.g., tube) **80** internal to the fuel nozzle. As shown, the two fuel tube segments **52**, **80** may be joined by an adaptor **83** having a braze joint at one end and sealed sliding joint at the other. The sealed sliding joint would allow the formed tube portion **80** to adjust as thermal growth in the nozzle **40** require. A solution (such as a coiled tube or sealed sliding joint) could be located in the housing stem to compensate for thermal growth mismatches. In this example, the solution uses an O-ring which could be a serviceable item. In exemplary embodiments, the coil section **81** may be located in the housing stem **42**.

[0060] FIG. **13** shows an alternative embodiment in which the vertically extending tube **52** and the axially extending fuel conduit tube **80** are constructed from a fully-formed, one-piece tube (including coil section **81**), thereby avoiding the need for the tube adaptor and eliminating two braze joints.

[0061] It is understood that the fuel nozzle **40** may be made of any suitable material(s) in any suitable manner to accommodate the pressures, flow rates, temperatures, fluid types, external environment, assembly, and other factors apparent from the foregoing description. For example, portions of the nozzle **40** (such as forward end portion having wall **66** and body **63**) may be formed as a monolithic (unitary) and seamless construction. This may be accomplished by additive manufacturing methods, such as direct laser deposition, direct metal laser sintering, etc. Alternatively or additionally, the portions of the nozzle **40** may be formed using conventional manufacturing techniques, for example, milling, machining, brazing, welding, or the like. Use of additive manufacturing may be advantageous to facilitate lighter, more complex, and more cost-efficient nozzle designs. By way of example, the straight tube and coiled tube may be created by machining and conventional manufacturing processes, respectively. The tube adaptor can be created by additive manufacturing processes, machining, or forging. The housing stem and inlet fitting can be made by conventional manufacturing or additive manufacturing methods. The inner air heatshield can be created by conventional methods or additive manufacturing. As identified, such a nozzle provides advantages such as lower wetted wall temperatures, fewer joins, fewer components, and lower weight (roughly 25% weight saving on like-for-like parts; 5% for total nozzle).

[0062] An exemplary fuel injector for a gas turbine engine of an aircraft having an exemplary fuel nozzle has been described herein. The exemplary fuel injector may include a housing stem, a fuel nozzle coupled to the housing stem, and a fuel conduit extending through the housing stem and into the fuel nozzle where the fuel conduit bends to extend in a longitudinal downstream direction within the fuel nozzle. The fuel conduit may be configured to transport bulk fuel flow further along the nozzle before being split downstream in the fuel circuit for final spray distribution, thereby promoting lower fuel temperatures. The fuel nozzle may minimize metal-to-metal contact between an external wall of the nozzle in thermal communication with ambient environment and an internal portion of the nozzle in thermal communication with the fuel circuit to minimize heat pick-up in the fuel. The fuel conduit may include a coiled section within a cavity of the fuel nozzle for compensating for thermal growth mismatches of the fuel injector.

[0063] According to an aspect of the present disclosure, a fuel injector includes: a housing stem; a fuel nozzle operatively coupled to the housing stem, the fuel nozzle extending in a longitudinal direction between an upstream end and a downstream discharge end of the fuel nozzle, the fuel nozzle comprising a fuel circuit having an inlet section and an outlet section; and a fuel conduit extending through the housing stem into the fuel nozzle to form the inlet section of the fuel circuit, and extending through the fuel nozzle in the longitudinal direction toward the downstream discharge end to form an upstream portion of the fuel circuit; wherein the fuel conduit is configured to provide bulk fuel flow through the housing stem and the upstream portion of the fuel circuit, the fuel conduit fluidly connecting downstream to a fuel manifold located at an intermediate longitudinal position in the fuel nozzle between the upstream end and the downstream discharge end, the fuel manifold being configured to split the bulk fuel flow into a plurality of fuel flow passages in a downstream portion of the fuel circuit for fuel distribution through the outlet section and fuel discharge from the fuel nozzle.

[0064] Embodiments may include one or more of the following additional features, separately or in any combination.

[0065] In some embodiments, the upstream portion of the fuel circuit provided by the fuel conduit has a surface area to volume ratio of that is less than a surface area to volume ratio of the downstream portion of the fuel conduit provided by the plurality of fuel flow passages.

[0066] In some embodiments, the upstream portion of the fuel circuit provided by the fuel conduit is confined to a partial angular region on one side of the longitudinal axis as the fuel conduit extends in the longitudinal direction.

[0067] In some embodiments, the upstream portion provided by the fuel conduit extends through an insulating gap internal to the fuel nozzle, and a major portion of the upstream portion provided by the fuel conduit is spaced apart from one or more walls of the fuel nozzle that are in heat transfer relation to an external environment of the fuel nozzle.

[0068] In some embodiments, the fuel conduit includes a fuel tube having a coiled section internal to the fuel nozzle, the coiled section at least partially circumscribing a longitudinal axis of the fuel nozzle.

[0069] In some embodiments, each of the plurality of fuel flow passages of the downstream portion has a cross-sectional area transverse to a direction of fuel flow that is less than a cross-sectional area transverse to a direction of fuel flow of the upstream portion provided by the fuel conduit.

[0070] In some embodiments, the plurality of fuel flow passages are internal fuel flow passages enclosed by a body portion of the fuel nozzle.

[0071] In some embodiments, the fuel conduit includes a fuel tube that is segmented into sections, with the sections being fluidly connected together via a fluid connector.

[0072] In some embodiments, the fuel conduit includes a single unitary fuel tube.

[0073] In some embodiments, each of the plurality of fuel flow passages include an outlet that opens into an annulus fluidly connected to the outlet section, the outlets forming an array of outlets circumferentially spaced apart about a longitudinal axis of the fuel nozzle.

[0074] In some embodiments, the downstream portion of the fuel circuit includes a fuel prefilmer between the outlets of the plurality of fuel flow passages and the outlet section of the fuel circuit, the annulus being an axially extending swirl annulus at an upstream portion of the fuel prefilmer in which the outlets open into the swirl annulus at an angle to provide swirling fuel flow, and the fuel prefilmer having a radially inwardly converging portion at a downstream portion thereof, the fuel prefilmer being configured to terminate at a downstream prefilmer orifice which forms the outlet section of the fuel circuit.

[0075] In some embodiments, the fuel injector further includes an inner air swirler, and an outer air swirler outwardly surrounding the inner air swirler, in which the fuel circuit is radially interposed between the inner air swirler and the outer air swirler.

[0076] In some embodiments, an overall axial distance of the fuel circuit is measured from the axial location of the inlet section where fuel enters the fuel nozzle to the axial location of the outlet section where fuel is distributed from the fuel circuit, and wherein an axial distance of the upstream portion providing bulk fuel flow is in a range from 30% to 99% of the overall axial distance of the fuel circuit.

[0077] In some embodiments, the fuel manifold is part of a transition section that is a first point of transition from bulk fuel flow to split flow as fuel flows downstream from a section of the fuel conduit in the housing stem.

[0078] According to another aspect, a fuel injector includes: a housing stem; a fuel nozzle operatively coupled to the housing stem, the fuel nozzle extending in a longitudinal direction between an upstream end and a downstream discharge end of the fuel nozzle; and a fuel tube extending through the housing stem into the fuel nozzle; wherein the fuel tube includes a coiled section contained within a portion of the fuel nozzle.

[0079] Embodiments may include one or more of the foregoing or following additional features, separately or in any combination.

[0080] In some embodiments, the fuel nozzle includes an inner air heatshield, and the coiled section is at least partially coiled around the inner air heatshield.

[0081] In some embodiments, the fuel tube is segmented into sections, with the sections being fluidly connected together via a fluid connector.

[0082] In some embodiments, the fuel tube is a single unitary tube.

[0083] In some embodiments, the fuel tube includes an axially extending section that extends in a longitudinal direction of the fuel nozzle downstream of the coiled section, the axially extending section configured to transport bulk fuel flow through the fuel nozzle.

[0084] According to another aspect, a fuel injector includes: a housing stem; a fuel nozzle operatively coupled to the housing stem, the fuel nozzle including an internal wall in heat transfer relation with fuel flowing through the nozzle, and an external wall in heat transfer relation with ambient environment; wherein the internal wall and the external wall are coupled together via a plurality of legs that are circumferentially spaced apart from each other about a longitudinal axis of the fuel nozzle.

[0085] Embodiments may include one or more of the foregoing or following additional features, separately or in any combination.

[0086] In some embodiments, the plurality of legs are equally spaced apart with gaps between the legs.

[0087] In some embodiments, the internal wall is formed by a body portion of the nozzle that encloses one or more fuel flow passages internal to the fuel nozzle.

[0088] In some embodiments, at least a rearward portion of the external wall is a single wall.

[0089] In some embodiments, the plurality of legs are the only coupling points between the inner wall and the external wall.

[0090] It is to be understood that terms such as "top," "bottom," "upper," "lower," "left," "right," "front," "rear," "forward," "rearward," and the like as used herein may refer to an arbitrary frame of reference, rather than to the ordinary gravitational frame of reference.

[0091] It is to be understood that all ranges and ratio limits disclosed in the specification and claims may be combined in any manner. It is to be understood that unless specifically stated otherwise, references to "a," "an," and/or "the" may include one or more than one, and that reference to an item in the singular may also include the item in the plural.

[0092] The term "about" as used herein refers to any value which lies within the range defined by a variation of up to ±10% of the stated value, for example, ±10%, ±9%, ±8%, ±7%, ±6%, ±5%, ±4%, ±3%, ±2%, ±1%, ±0.01%, or ±0.0% of the stated value, as well as values intervening such stated values.

[0093] The phrase "and/or" should be understood to mean "either or both" of the elements so conjoined, i.e., elements that are conjunctively present in some cases and disjunctively present in other cases. Other elements may optionally be present other than the elements specifically identified by the "and/or" clause, whether related or unrelated to those elements specifically identified unless clearly indicated to the contrary. Thus, as a non-limiting example, a reference to "A and/or B," when used in conjunction with open-ended language such as "comprising" can refer, in one embodiment, to A without B (optionally including elements other than B); in another embodiment, to B without A (optionally including elements other than A); in yet another embodiment, to both A and B (optionally including other elements); etc.

[0094] The word "or" should be understood to have the same meaning as "and/or" as defined above. For example, when separating items in a list, "or" or "and/or" shall be interpreted as being inclusive, i.e., the inclusion of at least one, but also including more than one, of a number or list of elements, and, optionally, additional unlisted items. Only terms clearly indicated to the contrary, such as "only one of" or "exactly one of," may refer to the inclusion of exactly one element of a number or list of elements. In general, the term "or" as used herein shall only be interpreted as indicating exclusive alternatives (i.e. "one or the other but not both") when preceded by terms of exclusivity, such as "either," "one of," "only one of," or "exactly one of."

[0095] The transitional words or phrases, such as "comprising," "including," "carrying," "having," "containing,"

"involving," "holding," and the like, are to be understood to be open-ended, i.e., to mean including but not limited to.

[0096] Although the invention has been shown and described with respect to a certain embodiment or embodiments, it is obvious that equivalent alterations and modifications will occur to others skilled in the art upon the reading and understanding of this specification and the annexed drawings. In particular regard to the various functions performed by the above described elements (components, assemblies, devices, compositions, etc.), the terms (including a reference to a "means") used to describe such elements are intended to correspond, unless otherwise indicated, to any element which performs the specified function of the described element (i.e., that is functionally equivalent), even though not structurally equivalent to the disclosed structure which performs the function in the herein illustrated exemplary embodiment or embodiments of the invention. In addition, while a particular feature of the invention may have been described above with respect to only one or more of several illustrated embodiments, such feature may be combined with one or more other features of the other embodiments, as may be desired and advantageous for any given or particular application.

1. A fuel injector, comprising:

a housing stem;

a fuel nozzle operatively coupled to the housing stem, the fuel nozzle extending in a longitudinal direction between an upstream end and a downstream discharge end of the fuel nozzle, the fuel nozzle comprising a fuel circuit having an inlet section and an outlet section; and

a fuel conduit extending through the housing stem into the fuel nozzle to form the inlet section of the fuel circuit, and extending through the fuel nozzle in the longitudinal direction toward the downstream discharge end to form an upstream portion of the fuel circuit;

wherein the fuel conduit is configured to provide bulk fuel flow through the housing stem and the upstream portion of the fuel circuit, the fuel conduit fluidly connecting downstream to a fuel manifold located at an intermediate longitudinal position in the fuel nozzle between the upstream end and the downstream discharge end, the fuel manifold being configured to split the bulk fuel flow into a plurality of fuel flow passages in a downstream portion of the fuel circuit for fuel distribution through the outlet section and fuel discharge from the fuel nozzle.

2. The fuel injector according to claim **1**,

wherein the upstream portion of the fuel circuit provided by the fuel conduit has a surface area to volume ratio of that is less than a surface area to volume ratio of the downstream portion of the fuel conduit provided by the plurality of fuel flow passages.

3. The fuel injector according to claim **1**,

wherein the upstream portion of the fuel circuit provided by the fuel conduit is confined to a partial angular region on one side of the longitudinal axis as the fuel conduit extends in the longitudinal direction.

4. The fuel injector according to claim **1**,

wherein the upstream portion provided by the fuel conduit extends through an insulating gap internal to the fuel nozzle, and a major portion of the upstream portion provided by the fuel conduit is spaced apart from one or more walls of the fuel nozzle that are in heat transfer relation to an external environment of the fuel nozzle.

5. The fuel injector according to claim **1**, wherein the fuel conduit includes a fuel tube having a coiled section internal to the fuel nozzle, the coiled section at least partially circumscribing a longitudinal axis of the fuel nozzle.

6. The fuel injector according to claim **1**, wherein each of the plurality of fuel flow passages of the downstream portion has a cross-sectional area transverse to a direction of fuel flow that is less than a cross-sectional area transverse to a direction of fuel flow of the upstream portion provided by the fuel conduit.

7. The fuel injector according to claim **1**, wherein the plurality of fuel flow passages are internal fuel flow passages enclosed by a body portion of the fuel nozzle.

8. The fuel injector according to claim **1**,

wherein the fuel conduit includes a fuel tube that is segmented into sections, with the sections being fluidly connected together via a fluid connector; or

wherein the fuel conduit includes a single unitary fuel tube.

9. The fuel injector according to claim **1**, wherein each of the plurality of fuel flow passages include an outlet that opens into an annulus fluidly connected to the outlet section, the outlets forming an array of outlets circumferentially spaced apart about a longitudinal axis of the fuel nozzle.

10. The fuel injector according to claim **9**, wherein the downstream portion of the fuel circuit includes a fuel prefilmer between the outlets of the plurality of fuel flow passages and the outlet section of the fuel circuit, the annulus being an axially extending swirl annulus at an upstream portion of the fuel prefilmer in which the outlets open into the swirl annulus at an angle to provide swirling fuel flow, and the fuel prefilmer having a radially inwardly converging portion at a downstream portion thereof, the fuel prefilmer being configured to terminate at a downstream prefilmer orifice which forms the outlet section of the fuel circuit.

11. The fuel injector according to claim **1**, further comprising an inner air swirler, and an outer air swirler outwardly surrounding the inner air swirler, in which the fuel circuit is radially interposed between the inner air swirler and the outer air swirler.

12. The fuel injector according to claim **1**,

wherein an overall axial distance of the fuel circuit is measured from the axial location of the inlet section where fuel enters the fuel nozzle to the axial location of the outlet section where fuel is distributed from the fuel circuit, and

wherein an axial distance of the upstream portion providing bulk fuel flow is in a range from 30% to 99% of the overall axial distance of the fuel circuit.

13. The fuel injector according to claim **1**,

wherein the fuel manifold is part of a transition section that is a first point of transition from bulk fuel flow to split flow as fuel flows downstream from a section of the fuel conduit in the housing stem.

14. A fuel injector, comprising:

a housing stem;

a fuel nozzle operatively coupled to the housing stem, the fuel nozzle extending in a longitudinal direction between an upstream end and a downstream discharge end of the fuel nozzle; and

a fuel tube extending through the housing stem into the fuel nozzle;

wherein the fuel tube includes a coiled section contained within a portion of the fuel nozzle.

15. The fuel injector according to claim **14**,
wherein the fuel nozzle includes an inner air heatshield, and
wherein the coiled section is at least partially coiled around the inner air heatshield.
16. The fuel injector according to claim **14**,
wherein the fuel tube is segmented into sections, with the sections being fluidly connected together via a fluid connector; or
wherein the fuel tube is a single unitary tube.
17. The fuel injector according to claim **14**,
wherein the fuel tube includes an axially extending section that extends in a longitudinal direction of the fuel nozzle downstream of the coiled section, the axially extending section configured to transport bulk fuel flow through the fuel nozzle.
18. A fuel injector, comprising:
a housing stem;
a fuel nozzle operatively coupled to the housing stem, the fuel nozzle including an internal wall in heat transfer relation with fuel flowing through the nozzle, and an external wall in heat transfer relation with ambient environment;
wherein the internal wall and the external wall are coupled together via a plurality of legs that are circumferentially spaced apart from each other about a longitudinal axis of the fuel nozzle.
19. The fuel injector according to claim **19**,
wherein the plurality of legs are equally spaced apart with gaps between the legs, and
wherein the internal wall is formed by a body portion of the nozzle that encloses one or more fuel flow passages internal to the fuel nozzle.
20. The fuel injector according to claim **18**,
wherein at least a rearward portion of the external wall is a single wall, and
wherein the plurality of legs are the only coupling points between the inner wall and the external wall.

* * * * *