**PCT** WORLD INTELLECTUAL PROPERTY ORGANIZATION
International Bureau

INTERNATIONAL APPLICATION PUBLISHED UNDER THE PATENT COOPERATION TREATY (PCT)

(51) International Patent Classification 6 : A45D 8/00

A1

(11) International Publication Number: **WO 98/06295**

(43) International Publication Date: 19 February 1998 (19.02.98)

(21) International Application Number: PCT/GB97/02134

(22) International Filing Date: 7 August 1997 (07.08.97)

(30) Priority Data:
9616722.6 9 August 1996 (09.08.96) GB

(71)(72) Applicant and Inventor: HAWLEY, Anthony, Arthur [GB/GB]; 17 Lesser Foxholes, Shoreham by Sea, West Sussex BN43 5NT (GB).

(74) Agents: FRY, Alan, Valentine et al.; Fry Heath & Spence, The Old College, 53 High Street, Horley, Surrey RH6 7BN (GB).

(81) Designated States: AL, AM, AT, AU, AZ, BA, BB, BG, BR, BY, CA, CH, CN, CU, CZ, DE, DK, EE, ES, FI, GB, GE, GH, HU, IL, IS, JP, KE, KG, KP, KR, KZ, LC, LK, LR, LS, LT, LU, LV, MD, MG, MK, MN, MW, MX, NO, NZ, PL, PT, RO, RU, SD, SE, SG, SI, SK, SL, TJ, TM, TR, TT, UA, UG, US, UZ, VN, YU, ZW, ARIPO patent (GH, KE, LS, MW, SD, SZ, UG, ZW), Eurasian patent (AM, AZ, BY, KG, KZ, MD, RU, TJ, TM), European patent (AT, BE, CH, DE, DK, ES, FI, FR, GB, GR, IE, IT, LU, MC, NL, PT, SE), OAPI patent (BF, BJ, CF, CG, CI, CM, GA, GN, ML, MR, NE, SN, TD, TG).

**Published**
*With international search report.*
*Before the expiration of the time limit for amending the claims and to be republished in the event of the receipt of amendments.*

(54) Title: HAIR STYLING APPARATUS

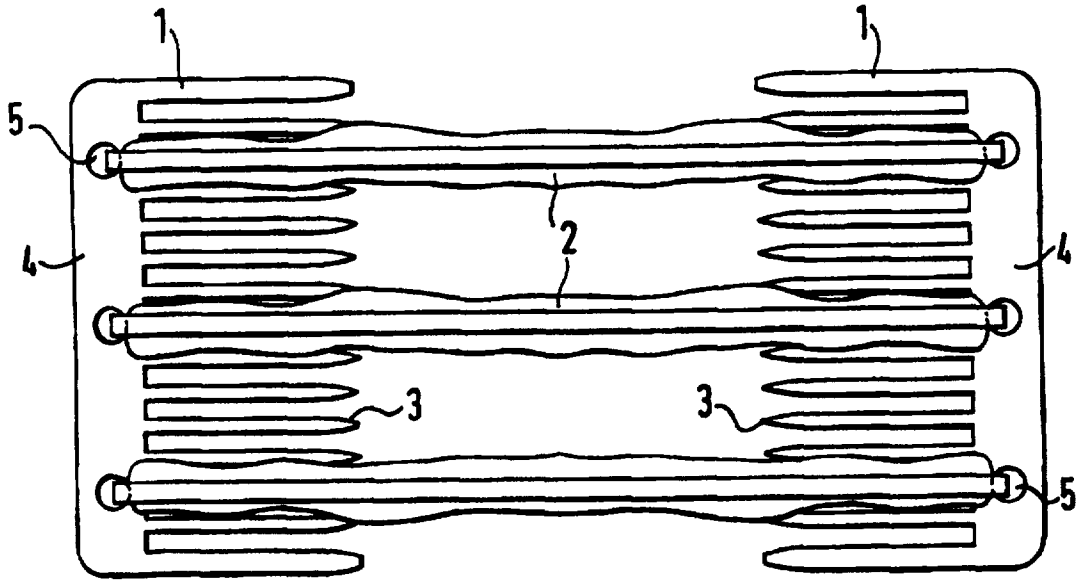


(57) Abstract

Hair styling apparatus comprising two combs (1) each having a curvilinear spine (4) and joined together by two or more elasticated material ties (2), each releasably connected to the spine of one or each comb by complementary interengaging means of the ties and the combs. In a preferred arrangement, three ties are provided, the connection points of these being substantially equi-spaced along the length of the respective spine.

*FOR THE PURPOSES OF INFORMATION ONLY*

Codes used to identify States party to the PCT on the front pages of pamphlets publishing international applications under the PCT.

| | | | | | | | |
|---|---|---|---|---|---|---|---|
| **AL** | Albania | **ES** | Spain | **LS** | Lesotho | **SI** | Slovenia |
| **AM** | Armenia | **FI** | Finland | **LT** | Lithuania | **SK** | Slovakia |
| **AT** | Austria | **FR** | France | **LU** | Luxembourg | **SN** | Senegal |
| **AU** | Australia | **GA** | Gabon | **LV** | Latvia | **SZ** | Swaziland |
| **AZ** | Azerbaijan | **GB** | United Kingdom | **MC** | Monaco | **TD** | Chad |
| **BA** | Bosnia and Herzegovina | **GE** | Georgia | **MD** | Republic of Moldova | **TG** | Togo |
| **BB** | Barbados | **GH** | Ghana | **MG** | Madagascar | **TJ** | Tajikistan |
| **BE** | Belgium | **GN** | Guinea | **MK** | The former Yugoslav Republic of Macedonia | **TM** | Turkmenistan |
| **BF** | Burkina Faso | **GR** | Greece | | | **TR** | Turkey |
| **BG** | Bulgaria | **HU** | Hungary | **ML** | Mali | **TT** | Trinidad and Tobago |
| **BJ** | Benin | **IE** | Ireland | **MN** | Mongolia | **UA** | Ukraine |
| **BR** | Brazil | **IL** | Israel | **MR** | Mauritania | **UG** | Uganda |
| **BY** | Belarus | **IS** | Iceland | **MW** | Malawi | **US** | United States of America |
| **CA** | Canada | **IT** | Italy | **MX** | Mexico | **UZ** | Uzbekistan |
| **CF** | Central African Republic | **JP** | Japan | **NE** | Niger | **VN** | Viet Nam |
| **CG** | Congo | **KE** | Kenya | **NL** | Netherlands | **YU** | Yugoslavia |
| **CH** | Switzerland | **KG** | Kyrgyzstan | **NO** | Norway | **ZW** | Zimbabwe |
| **CI** | Côte d'Ivoire | **KP** | Democratic People's Republic of Korea | **NZ** | New Zealand | | |
| **CM** | Cameroon | | | **PL** | Poland | | |
| **CN** | China | **KR** | Republic of Korea | **PT** | Portugal | | |
| **CU** | Cuba | **KZ** | Kazakstan | **RO** | Romania | | |
| **CZ** | Czech Republic | **LC** | Saint Lucia | **RU** | Russian Federation | | |
| **DE** | Germany | **LI** | Liechtenstein | **SD** | Sudan | | |
| **DK** | Denmark | **LK** | Sri Lanka | **SE** | Sweden | | |
| **EE** | Estonia | **LR** | Liberia | **SG** | Singapore | | |

# HAIR STYLING APPARATUS

This invention relates to hair styling apparatus.

Presently, items such as hair grips, pins, scrunchies, elasticated bands and the like are used by ladies to style their hair and to keep the chosen style in place over a period of time. Decorative hair accessories are also sometimes used to enhance the selected style.

A device for waving hair is disclosed by GB-PS-240377. This device includes a pair of separable combs connected together by spring clips or rubber bands. The device is intended to be inserted in the hair whilst it is damp and allowed to remain in place until the hair is perfectly dry to create a waving effect. The spine of each comb of the device is straight, not curvilinear. Similar devices are illustrated in GB-PS-279268, US-PS-5174312 and US-PS-5494060. However, in each of these devices the connection between the comb-pieces is neither elasticated nor readily releasable.

The straight spines of the device of GB-PS-240377 limits the use of the device to the waving technique discussed above and the comb connections of the devices of the three other documents are cumbersome and inappropriate for day-to-day use.

The present invention sets out to provide styling apparatus which also acts as a decorative accessory and which overcomes or at least alleviates many of the problems discussed above.

According to the present invention in one aspect there is provided hair styling apparatus which comprises two combs each having a curvilinear spine and joined together by two or more elasticated material ties each releasably connected to the spine of one or each comb by complementary interengaging means of the ties and the combs.

In a preferred arrangement, three ties are provided, the connection points of these being substantially equi-spaced along the length of the respective spine.

The teeth of one or each comb are also preferably curvilinear. The material ties are preferably decorative in nature.

The connection means of the or each comb spine may comprise two or more spaced openings formed in the comb spine into which the ends of a like number of material ties may locate for retention therein. Each opening may extend through the spine and may include inwardly extending protrusions shaped to impart resistance to withdrawal of an end of a material tie from the opening. The opening may be round, rectangular, elliptical or other shape. Alternatively each opening may include or be associated with a hook-shaped protrusion around which a looped end of a material tie or extension thereto can be retained. The extension may be elasticated.

Alternatively, a snap-on connector may be attachable to the or each comb spine, the respective tie ends being trapped between the opposed surfaces of the snap-on connector and the spine surface.

The connecting feature of each material tie may comprise a ball or

barb of material, metal, plastics or the like, which is tied, crimped, fused or glued to one or each end of the material pieces. Other shaped members may be employed, e.g. conical or frustoconical member. Alternatively, the ends of ties may be looped or knotted.

The invention will now be described by way of example only with reference to the accompanying diagrammatic drawings, in which:-

Figures 1 and 2 are respectively front and side views of hair styling apparatus in accordance with the invention;

Figures 3 to 5 are details to an enlarged scale of connection features of apparatus in accordance with the invention;

Figures 6 to 13 are sectional views taken through the spines of combs which form part of apparatus in accordance with the invention;

Figures 14 to 17 are respectively front, sectional and rear views of alternative apparatus in accordance with the invention; and

Figures 18 and 19 are respectively side and end views of a barbed extension piece forming part of apparatus in accordance with the invention.

As will be seen from Figure 1, the illustrated hair styling apparatus comprises a pair of combs 1 joined together by three elasticated material ties 2 of substantially the same length. The ties 2 may be covered with or carry decorative material or features.

As will be seen from Figure 2, the teeth 3 of each comb are curvilinear.

The comb spine 4 is also curvilinear.

The comb spines are releasably connected to the ties by simple hand movement for ease of removal and replacement.

To this end, each comb 1 has formed in its spine 4 three equally spaced through openings 5 into and through which ends of the ties 2 pass. As shown in Figures 3, 4 and 5, the shape of these openings may, for example be of round, keyhole or rectangular shape. Other suitable shapes could, however, be employed.

In cross section the openings may be inwardly stepped in the manner shown in Figures 6 to 9. Also, as shown in Figures 6 to 8, each tie 2 may have attached to one or each of its ends a material, metal or plastics barb or ball 6 which enters the respective opening 5 through its narrower end and is retained within the opening by engagement with the inwardly extending shoulders 7 of the steps. The balls may have sufficient flexibility to enable them to pass between the shoulders before expanding to the positions illustrated. Additionally, or alternatively, the shoulders may flex to enable the balls to pass therebetween. Thus, if a rigid plastics or metal ball is used, the material of the comb spine will have sufficient flexibility to enable the ball to pass through the respective opening. In an alternative construction, a knot is simply tied in each tie end to replicate the action of the illustrated ball. The balls 5 may be tied, crimped, fused or glued to the ends of the ties. Ribs may optionally be positioned along the axis of each opening to enhance retention of the balls within the openings. In the embodiment illustrated in Figure 8, the opening is heat staked to enhance ball retention. In the arrangement shown in Figure 9, a separate ball 8 is provided around which a tie end or an elastic extension to a tie is positioned.

In the arrangement illustrated in Figure 10, recesses 9 are formed along the spine 4 of one or both combs in each of which is received a ball 10 around which is wound one end of a tie or elasticated tie extension. Each ball 10 is retained in place by fittings 11 which snap-on, or are

screwed, glued or riveted to the surface of each comb spine.

As shown in Figure 11, each spine opening may included a hook-shaped protrusion 12 over which a looped end 14 of a tie or elasticated tie extension may locate. A similar construction is shown in Figure 12 except that in this arrangement the hook-shaped protrusion 12 extends to a position below the opening.

In the arrangement shown in Figure 13, a looped tie end 14 or elasticated tie extension is trapped within the opening by a snap-in rod 15.

In the embodiment illustrated in Figures 14 to 17, the illustrated opening 5 is recessed on its undersurface to define a slot 16 to receive an elongate metal barb 17 secured by, for example, crimping to an elasticated extension 18 of a tie. In use, the barb is simply threaded through the opening 5 and then turned through 90° to seat within the slot 16.

It will be appreciated that other complementary connections can be employed.

The combs and ties can be produced in a wide range of colours. The ties may be decorative themselves or carry decorative pieces such as bows. The apparatus described enables the user to create a number of hair styles and provides a fashion accessory for the hair of the user.

In use, one comb is slid into the hair. The fingers of one hand are then placed over this comb and through the material ties to hold both the comb and the hair in place. The second comb is then reversed with the other hand and is slid into the hair such that the teeth ends of the combs lie next to one another with the hair held by the teeth of the comb in the selected style.

It will be appreciated that the foregoing is merely exemplary of hair styling apparatus in accordance with the invention and that modifications can readily be made thereto without departing from the true scope of the invention as set out in the appended claims.

## CLAIMS

1. Hair styling apparatus comprising two combs each having a curvilinear spine and joined together by two or more elasticated material ties each releasably connected to the spine of one or each comb by complementary interengaging means of the ties and the combs.

2. Apparatus as claimed in claim 1 wherein three ties are provided, the connection points of these being substantially equi-spaced along the length of the respective spine.

3. Apparatus as claimed in claim 1 or claim 2 wherein the connection means of the or each comb spine comprises two or more spaced openings formed in the comb spine into which the ends of a like number of material ties locate for retention therein.

4. Apparatus as claimed in claim 3 wherein each opening extends through the spine and includes inwardly extending protrusions shaped to impart resistance to withdrawal of an end of a material tie from the opening.

5. Apparatus as claimed in claim 3 wherein each opening includes or is associated with a hook-shaped protrusion around which a looped end of a material tie or extension thereto can be retained.

6. Apparatus as claimed in claim 5 wherein the extension is elasticated.

7. Apparatus as claimed in claim 1 or claim 2 wherein the connection means comprises a snap-on connector attached to the or each comb spine, the respective tie ends being trapped between the opposed surfaces of the snap-on connector and the spine surface.

8. Apparatus as claimed in claim 1 or claim 2 wherein the interengaging means of each material tie comprises a ball or barb which is tied, crimped, fused or glued to one or each end of the material pieces.

9. Apparatus as claimed in claim 1 or claim 2 wherein the interengaging means of each material tie comprises loops at one or each end of the material pieces.

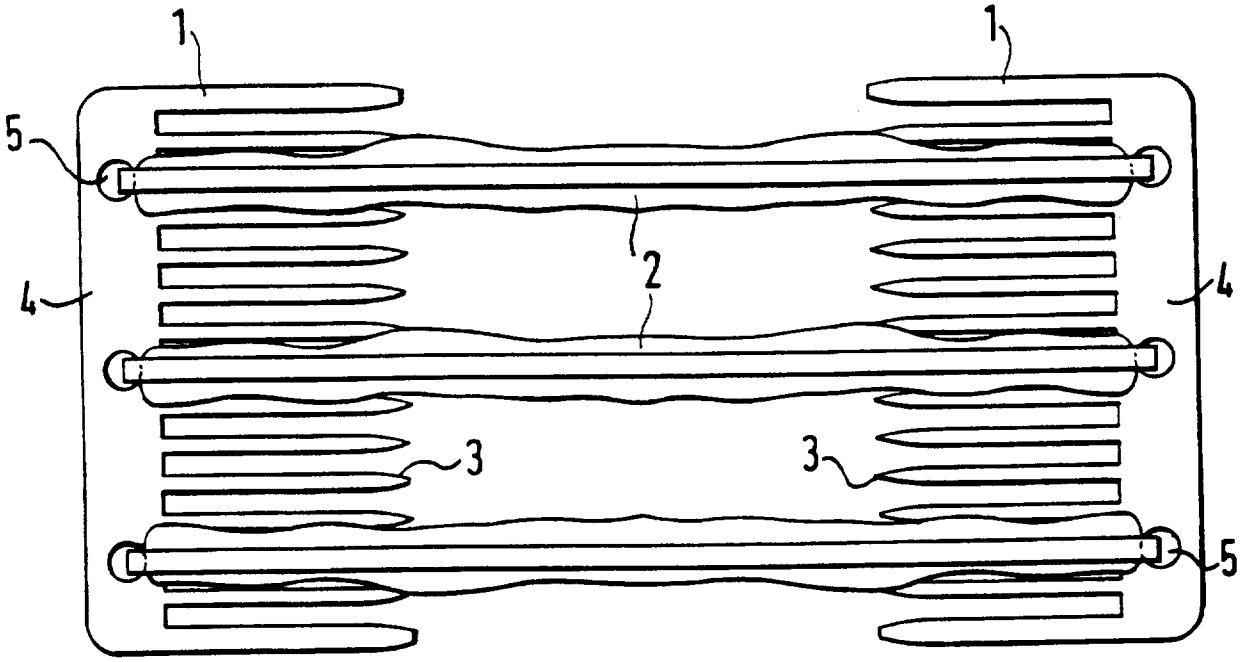


Fig.1.

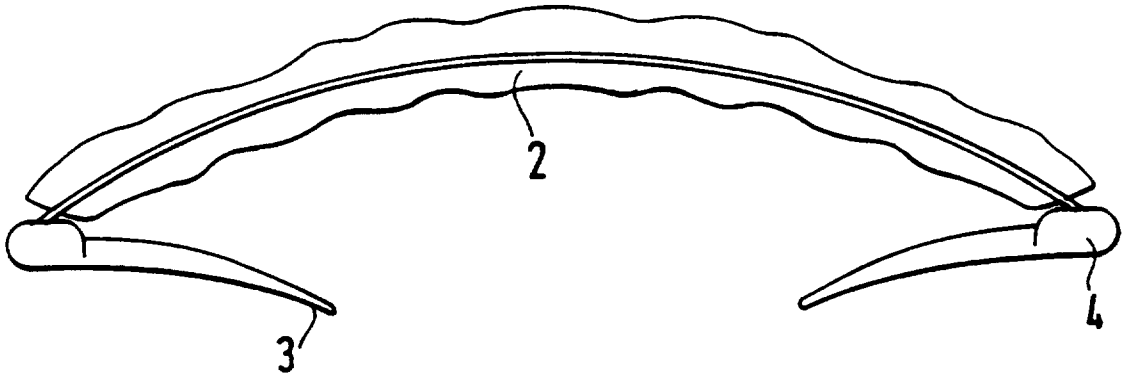


Fig.2.

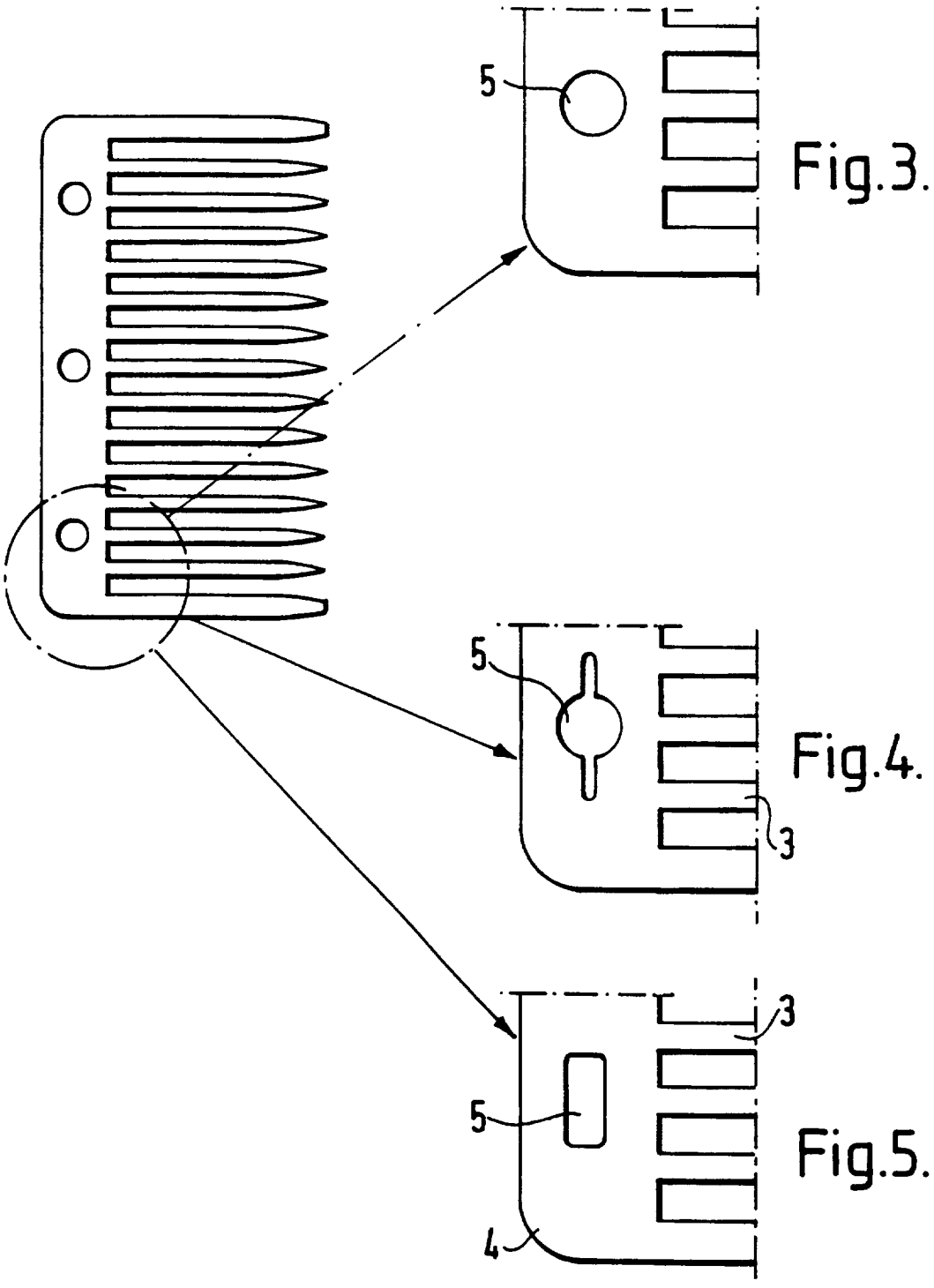


Fig.3.

Fig.4.

Fig.5.

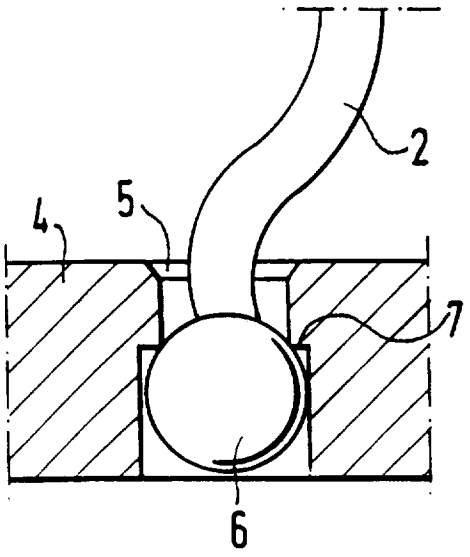


Fig.6.

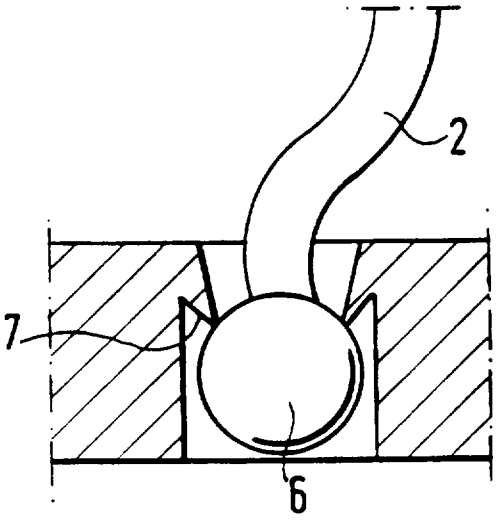


Fig.7.

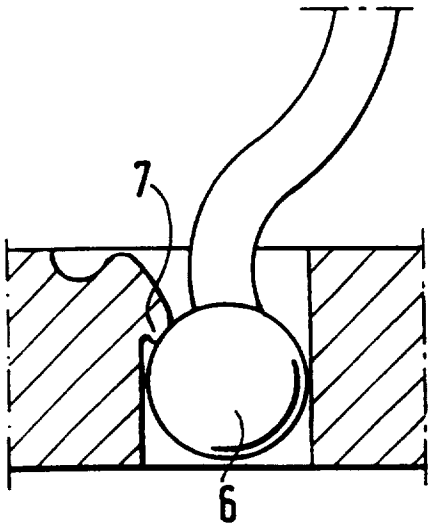


Fig.8.

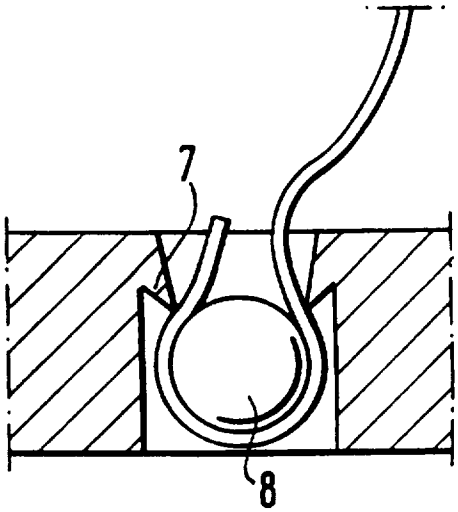


Fig.9.

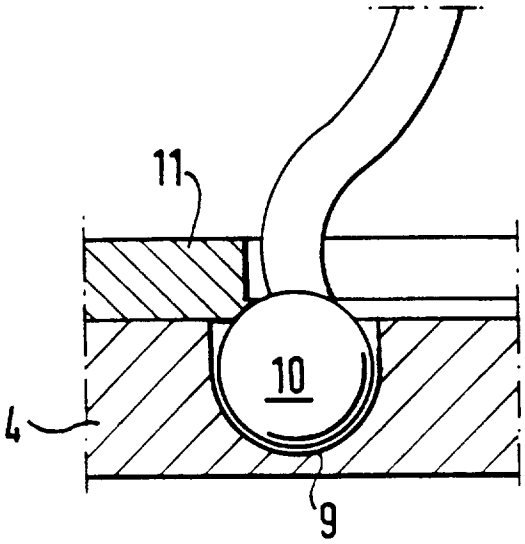


Fig.10.

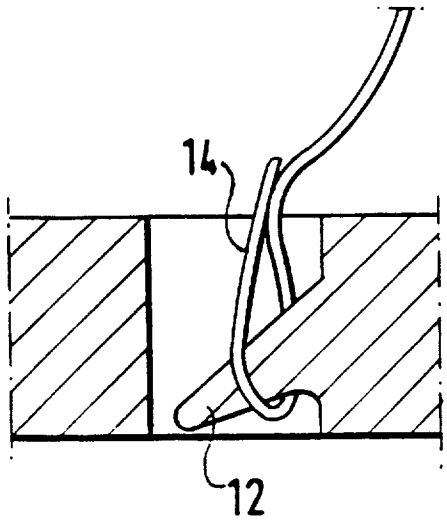


Fig.11.

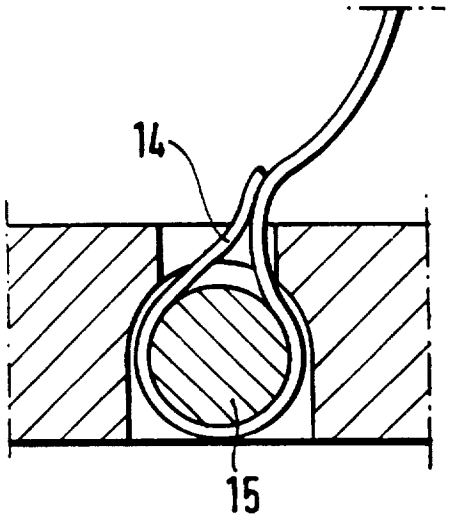


Fig.12.

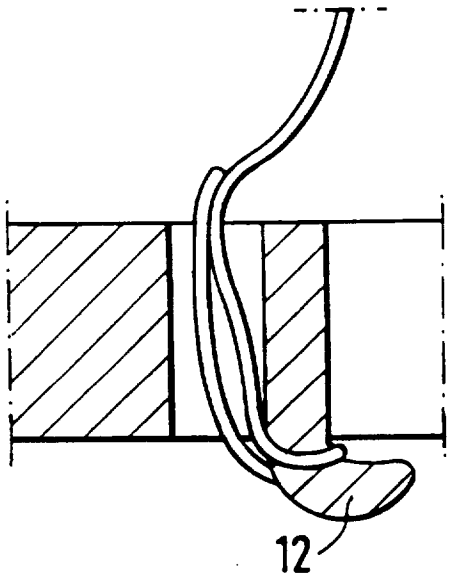


Fig.13.

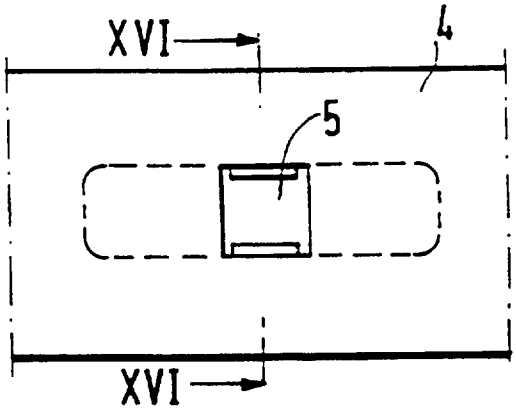


Fig.14.

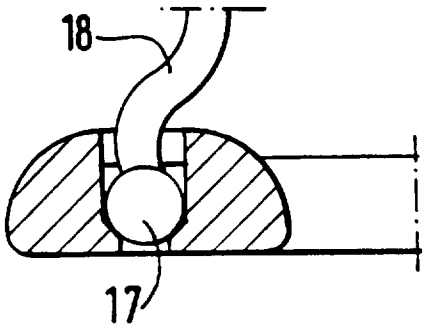


Fig.15.

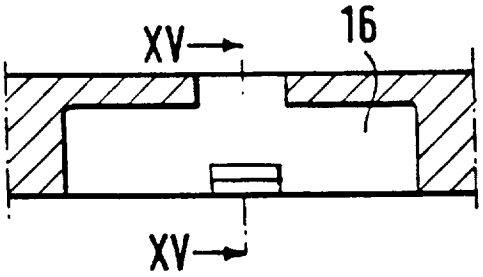


Fig.16.

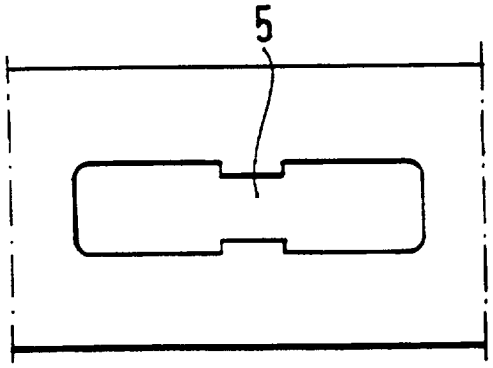


Fig.17.

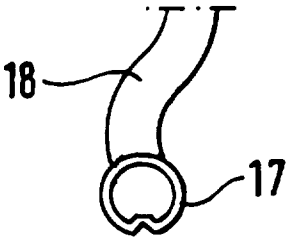


Fig.18.

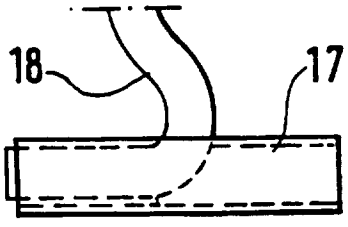


Fig.19.

# INTERNATIONAL SEARCH REPORT

Inte .ional Application No
PCT/GB 97/02134

A. CLASSIFICATION OF SUBJECT MATTER
IPC 6 A45D8/00

According to International Patent Classification(IPC) or to both national classification and IPC

B. FIELDS SEARCHED

Minimum documentation searched (classification system followed by classification symbols)
IPC 6 A45D

Documentation searched other than minimum documentation to the extent that such documents are included in the fields searched

Electronic data base consulted during the international search (name of data base and, where practical, search terms used)

C. DOCUMENTS CONSIDERED TO BE RELEVANT

| Category ° | Citation of document, with indication, where appropriate, of the relevant passages | Relevant to claim No. |
|---|---|---|
| A | FR 594 906 A (RUFFIO) 23 September 1925<br>see the whole document | 1 |
| A | DE 205 861 C (HESS) 19 January 1909<br>see the whole document | 1 |
| A | FR 372 085 A (HESS) 23 March 1907<br>see the whole document | 1 |
| A | GB 315 733 A (JUZZA JACOBELLI) 16 July 1929 | |
| A | FR 319 227 A (LANDOIN) 7 November 1902 | |
| A | FR 319 203 A (KREIDL) 7 November 1902 | |
| A | US 4 254 783 A (KIM) 10 March 1981 | |

☐ Further documents are listed in the continuation of box C.

☒ Patent family members are listed in annex.

° Special categories of cited documents :

"A" document defining the general state of the art which is not considered to be of particular relevance

"E" earlier document but published on or after the international filing date

"L" document which may throw doubts on priority claim(s) or which is cited to establish the publication date of another citation or other special reason (as specified)

"O" document referring to an oral disclosure, use, exhibition or other means

"P" document published prior to the international filing date but later than the priority date claimed

"T" later document published after the international filing date or priority date and not in conflict with the application but cited to understand the principle or theory underlying the invention

"X" document of particular relevance; the claimed invention cannot be considered novel or cannot be considered to involve an inventive step when the document is taken alone

"Y" document of particular relevance; the claimed invention cannot be considered to involve an inventive step when the document is combined with one or more other such documents, such combination being obvious to a person skilled in the art.

"&" document member of the same patent family

1

| Date of the actual completion of the international search | Date of mailing of the international search report |
|---|---|
| 28 November 1997 | 16/12/1997 |

| Name and mailing address of the ISA | Authorized officer |
|---|---|
| European Patent Office, P.B. 5818 Patentlaan 2<br>NL – 2280 HV Rijswijk<br>Tel. (+31-70) 340-2040, Tx. 31 651 epo nl,<br>Fax: (+31-70) 340-3016 | Sigwalt, C |

# INTERNATIONAL SEARCH REPORT

Information on patent family members

Inte ..ional Application No
PCT/GB 97/02134

| Patent document cited in search report | Publication date | Patent family member(s) | Publication date |
|---|---|---|---|
| FR 594906 A | 23-09-25 | DE 436831 C | |
| DE 205861 C | | NONE | |
| FR 372085 A | | NONE | |
| GB 315733 A | | NONE | |
| FR 319227 A | | NONE | |
| FR 319203 A | | NONE | |
| US 4254783 A | 10-03-81 | NONE | |