PCT WORLD INTELLECTUAL PROPERTY ORGANIZATION
International Bureau

INTERNATIONAL APPLICATION PUBLISHED UNDER THE PATENT COOPERATION TREATY (PCT)

(51) International Patent Classification 6 : **H04Q 7/22, H04M 11/00**

A1

(11) International Publication Number: **WO 95/23488**

(43) International Publication Date: 31 August 1995 (31.08.95)

(21) International Application Number: PCT/US95/01373

(22) International Filing Date: 31 January 1995 (31.01.95)

(30) Priority Data:

08/201,445	24 February 1994 (24.02.94)	US
08/263,711	22 June 1994 (22.06.94)	US

(60) Parent Applications or Grants
(63) Related by Continuation

US	08/263,711 (CON)
Filed on	22 June 1994 (22.06.94)
US	08/201,445 (CIP)
Filed on	24 February 1994 (24.02.94)

(71) Applicant *(for all designated States except US)*: GTE MOBILE COMMUNICATIONS SERVICE CORPORATION [US/US]; 245 Perimeter Center Parkway, Atlanta, GA 30346 (US).

(72) Inventors; and
(75) Inventors/Applicants *(for US only)*: ZICKER, Robert, G. [US/US]; 293 Ascot Lane, Roswell, GA 30076 (US). DION, John, K. [US/US]; 530 Slane Trace, Roswell, GA 30075 (US).

(74) Agents: GRESHAM, Lowell, W. et al.; Meschkow & Gresham, Suite 110, 320 East McDowell Road, Phoenix, AZ 85004 (US).

(81) Designated States: AM, AT, AU, BB, BG, BR, BY, CA, CH, CN, CZ, DE, DK, EE, ES, FI, GB, GE, HU, JP, KE, KG, KP, KR, KZ, LK, LR, LT, LU, LV, MD, MG, MN, MW, MX, NL, NO, NZ, PL, PT, RO, RU, SD, SE, SI, SK, TJ, TT, UA, US, UZ, VN, European patent (AT, BE, CH, DE, DK, ES, FR, GB, GR, IE, IT, LU, MC, NL, PT, SE), OAPI patent (BF, BJ, CF, CG, CI, CM, GA, GN, ML, MR, NE, SN, TD, TG), ARIPO patent (KE, MW, SD, SZ).

Published
With international search report.

(54) Title: MULTIPLE MODE PERSONAL WIRELESS COMMUNICATIONS SYSTEM

(57) Abstract

A multiple mode, personal, wireless communications system exists within a radiotelephone network serving general customers and provides additional services to a select group of customers. The system uses handsets (32) which automatically switch between a standard cellular radiotelephone mode of operation (1901) and an enhanced cordless mode (1420) when the handsets (32) are within range of pico cells (26) that are interconnected to the public switched telephone network (20). Each pico cell is controlled via a framework of overlay cells (10b) that operates independently of the radiotelephone network and uses a unique control protocol on a small number of reserved cellular channels. Each pico cell consists of a spectrally dynamic, non-capturing, frequency agile, multi-purpose base station (26) provided at customer-selected locations to cooperate with the overlay cell framework. Each pico cell is capable of supporting multiple handsets (32) and using low power operation that achieves limited coverage. Each pico cell reduces traffic on the standard cellular radiotelephone network by independently handling registered handsets (32). An alternate line option module (22) provides wireless local interconnect capability to selectively route call traffic between land lines (24) and the standard cellular radiotelephone network. Service control units (12) and host stations (17) facilitate wireless activation and control of each pico cell and handset (32) via the overlay cell framework.

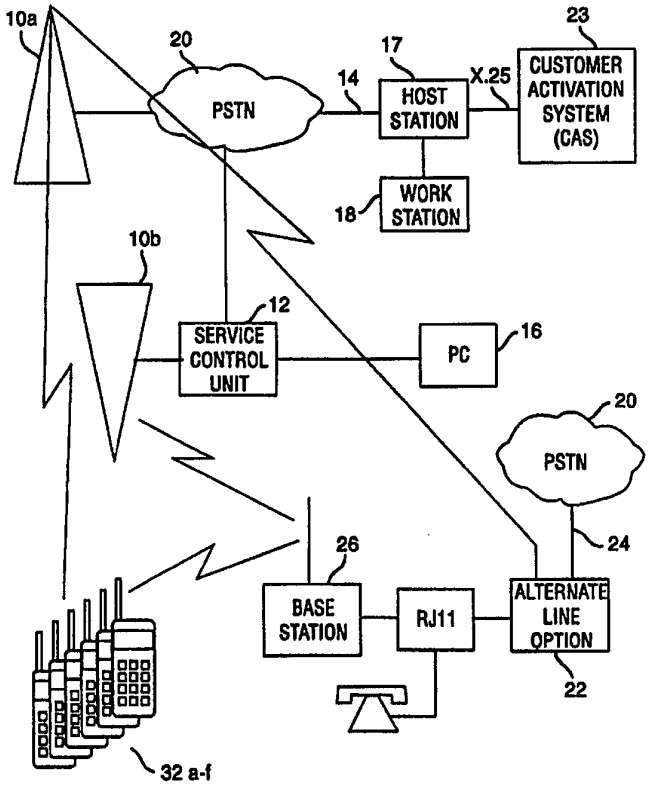

FOR THE PURPOSES OF INFORMATION ONLY

Codes used to identify States party to the PCT on the front pages of pamphlets publishing international applications under the PCT.

AT	Austria	**GB**	United Kingdom	**MR**	Mauritania
AU	Australia	**GE**	Georgia	**MW**	Malawi
BB	Barbados	**GN**	Guinea	**NE**	Niger
BE	Belgium	**GR**	Greece	**NL**	Netherlands
BF	Burkina Faso	**HU**	Hungary	**NO**	Norway
BG	Bulgaria	**IE**	Ireland	**NZ**	New Zealand
BJ	Benin	**IT**	Italy	**PL**	Poland
BR	Brazil	**JP**	Japan	**PT**	Portugal
BY	Belarus	**KE**	Kenya	**RO**	Romania
CA	Canada	**KG**	Kyrgystan	**RU**	Russian Federation
CF	Central African Republic	**KP**	Democratic People's Republic of Korea	**SD**	Sudan
CG	Congo			**SE**	Sweden
CH	Switzerland	**KR**	Republic of Korea	**SI**	Slovenia
CI	Côte d'Ivoire	**KZ**	Kazakhstan	**SK**	Slovakia
CM	Cameroon	**LI**	Liechtenstein	**SN**	Senegal
CN	China	**LK**	Sri Lanka	**TD**	Chad
CS	Czechoslovakia	**LU**	Luxembourg	**TG**	Togo
CZ	Czech Republic	**LV**	Latvia	**TJ**	Tajikistan
DE	Germany	**MC**	Monaco	**TT**	Trinidad and Tobago
DK	Denmark	**MD**	Republic of Moldova	**UA**	Ukraine
ES	Spain	**MG**	Madagascar	**US**	United States of America
FI	Finland	**ML**	Mali	**UZ**	Uzbekistan
FR	France	**MN**	Mongolia	**VN**	Viet Nam
GA	Gabon				

MULTIPLE MODE PERSONAL WIRELESS COMMUNICATIONS SYSTEM

TECHNICAL FIELD

The present invention relates to an improved wireless communications system. More particularly, the preferred embodiment of the invention concerns a multiple mode communications system, including special handsets designed to operate with standard analog or digital protocols when within the coverage of a standard cellular radiotelephone network, and to automatically switch to an enhanced cordless mode that operates with unique protocols when within the coverage area provided by independent, low power "pico" cells that are connected to the wireline telephone network. The term "pico" is used herein to suggest a smaller size than conventional cellular radio telephone cells. Pico cells are provided at customer selected locations to cooperate with a framework of overlay cells that operate independently of the cells of the cellular network.

This overlay cell framework allows the service provider to exercise complete control over the operation of each special handset and the pico cell system by means of service control units and host stations. The standard cellular system can be further enhanced by the addition of zone identifier overhead messages which are ignored by standard handsets but interpreted by the special handsets to inform those customers continuously of the special handset's current operating mode.

BACKGROUND ART

There has long been a recognized need for ubiquitous telecommunications services wherein each customer is assigned a personal service number and provided with suitable equipment which will permit the customer to have two-way communication capability (i.e., the ability to make and receive calls) regardless of the customer's changing location.

Systems that extend beyond traditional wireline telephone service have been developed in order to more closely achieve this capability from a technical perspective. For example, recent innovations in paging, standard cordless within the home telephone service, cellular telephone service and personal communications systems are well known. The designs of such systems all comprise efforts to cost effectively satisfy the need for ultimate ubiquitous service. However, each system has well recognized technical and cost disadvantages which cause it to fall short of providing ubiquitous telecommunications service.

For example, conventional systems control the operation of remote equipment via remote programming. However, such conventional systems require original programming to establish a phone system identity, such as a Mobile Identification Number (MIN), which may be later used to engage in calls that provide remote programming. This is an undesirable remote programming technique because it prevents the original programming from occurring

remotely. Consequently, an entire complex and expensive infrastructure is provided to deal with original programming for remote equipment through physical access to the equipment.

In addition, conventional cellular systems monitor power levels of transmitted signals to determine whether signal levels are sufficiently high to warrant the provision of communication services. Such conventional systems have a relatively low access threshold because they do not wish to deny communication services to any potential user and forego the revenues potentially achievable therefrom. However, conventional cellular systems may handoff or drop a call immediately after accepting access from a handset with a weak signal. This is an undesirable technique when applied to small cells that do not support handoffs or wish to minimize handoff overhead communications because it leads to dropping or handing-off calls immediately upon access.

Furthermore, conventional cellular systems are designed so that users are not aware when their calls are about to be dropped by a cell. When a call is dropped by one cell, hopefully another cell is available to accept the call through a handoff process. But, in conventional and other cellular systems, the availability of another cell is not assured. This is an undesirable operational technique because calls are dropped without warning users in situations where users may be able to take steps to prevent the call from being dropped.

Moreover, when conventional systems provide alerting signals, such as call waiting sounds and others, to users during a call, such alerting signals are often configured so that both parties to the call are aware of the alerting signal. This too is an undesirable operational technique. The party in the call who is not being alerted generally has no need to know of the alert. When this other party becomes aware of an alert which has no meaning to him or her, confusion often results and the flow of a conversation is often unnecessarily disrupted.

Still further, conventional systems are designed merely to provide services through handsets when they are able to do so. They generally fail to recognize that a variety of communication services may be available through a variety of different communication systems, such as multiple cellular systems and a land-line service. They further fail to integrate the variety of services in a common handset and to provide meaningful information to a user regarding the various communication service options which may be available through the handset from time to time.

Accordingly, a need still exists for an improved communications system that comes closer to providing ubiquitous communications service to customers than existing systems.

DISCLOSURE OF INVENTION

Therefore, it is an object of this invention to provide an improved telecommunications system which more completely meets customer needs for low cost, ubiquitous telecommunications service.

It is another object of the invention to provide an improved telecommunications system, designed to include a standard cellular network, and which further includes a network of overlay cells that operate independently of the cells of the cellular network.

It is a further object of the invention to provide, in such a system, a multi-channel pico station at each customer location that, in turn, supports multiple portable telephone handsets, with each handset being capable of operating in a wireless or pico mode when within the customer premises, and in a standard cellular mode when away from the customer premises and yet within the cellular coverage area.

It is yet a further object of the invention to provide such an improved telecommunications system wherein call forwarding capability is provided in conjunction with distinctive ring so that a customer with a portable personal handset selected to operate in one of the dual modes can receive and readily identify incoming calls, directed to the assigned cellular customer number, through the unselected or inactive mode of the system.

It is yet another object of the invention to provide automatic registration and control of such a dual mode portable handset, without customer action, and with the customer being provided with a display advising the status or mode which the handset is set to operate in at any time, so that the customer can make informed, cost-effective decisions as to call placement.

It is another object of the invention to provide in a dual mode system using one radio per handset, a mode of operation based upon a unique, though cellular compatible, protocol that permits easy dynamic channel allocation and occupancy.

It is another object of the invention to provide an alternate line option capability which permits selective allocation of call traffic between the customer premises and the cellular network.

These objects and other features and advantages of the invention are attained in a telecommunications system that is designed to operate in conjunction with a standard cellular network having multiple cell sites of either analog or digital configuration and embodying standard geographical coverage. The system also includes a comparable network of overlay cells that operate independently of the standard cell sites of the cellular network. Alternatively, the system could be used within a radiotelephone network of other character, such as an SMR network, for example.

Preferably, each overlay cell provides radio communication coverage to a geographical area that corresponds generally to the cellular site area, but on a set of reserved cellular frequencies that are selected with the maximum possible separation with respect to the assigned cellular network signaling frequencies, so as to be non-interfering.

To cooperate with the overlay cells a base station, referred to hereinafter as a pico station, is provided at each customer site. Each pico station is designed to support up to six improved portable handsets which function in dual modes. In a first mode each handset functions as a normal portable network or cellular telephone, when it is physically removed

from the proximity of the pico station. A second wireless mode of operation is described herein for the handsets of the system which has been referred to herein as enhanced cordless on the first iterations and will be referred to as the pico mode in subsequent usage. The enhanced cordless mode of this invention differs from the operation of standard cordless telephones in several respects. This system employs a unique burst mode communication control protocol between the handsets and the pico station which is not found in standard cordless operation. This protocol is compatible with cellular standards to permit dual mode operation which would not be possible with standard cordless. Moreover, the standard cordless frequency arrangement is obviously different from cellular frequencies used in this system. Other differences will become apparent from the description that follows, which result in operational improvements in the service offered.

The use of the unique protocol of this system permits remote activation and control using the 10k bit Manchester encoded data pathway inherent in cellular telephone hardware. Therefore, when close to the pico station, the handset operates as a cordless telephone supported by the pico station via a connection to the house PSTN wiring.

In the preferred mode, call delivery is provided through a link that may also include an alternate line option module connected between the pico station and the PSTN. With that arrangement, service can be provided through direct access from the pico station to the public switched telephone network, or alternatively, service from the pico station can be selectively redirected back to the cellular network by the radio of the alternate line option module. A significant advantage of the system arises from the capability of allocating selected portions of call traffic between these two paths, in order to accommodate call capacity and varying call demand. This permits deployment of the system in areas with limited cellular capacity, without necessitating rationing of service.

Service control units and a host station are provided to facilitate set up and control of the portable handsets and pico stations using remote programming techniques which were not previously practical.

Each handset includes components comparable to that of a standard analog cellular telephone having one radio transceiver. In addition, the handset has added software to permit it to operate in the pico mode, in cooperation with the pico station located at the customer premises. As an alternative to analog technology, the modified handsets can embody compatible digital technology, again with the same necessary additions or modifications to support pico operation.

After initial set-up, each handset employs a process to identify when it is in the general neighborhood of its authorizing pico station. Only then will the handset seek out its authorizing pico station by periodically transmitting a signal to determine if it is within acceptable communication range. If the pico station receives an acceptable level handset signal, it responds and exchanges registration information with the handset to establish or register the handset in the pico mode.

The handset then sends a message to the cellular system upon which it also operates, directing that all incoming calls subsequently attempted on the cellular network be forwarded to this authorizing pico station telephone number (this may be the customer home PSTN number). Finally, the handset is switched to the pico mode and sends a response control message to the pico station indicating that it is "home" and in service. At that time, a message on the handset display indicates to the user that the handset is in the pico mode, as opposed to the cellular mode.

When in the pico mode, the system operates at a lower power level on selected, reserved cellular channels with the same basic technical standards as analog AMPS type cellular systems. During this mode, the pico station can and does function as a telecommunications base station with no hand-off capability.

Up to six handsets may be registered with the pico station. In the preferred embodiment only one handset may transmit at any one time. However, the system supports the capability for other handsets to join calls in progress. The handset to pico station link is accomplished at very low power levels during call activity, which results in low battery drain.

The pico station is connected directly to home telephone wiring for call delivery, but is always controlled via a radio frequency link to a service control unit and an overlay host station located within the network area. When the handset is carried out of range of the pico station in an operating state, it automatically switches back to the cellular mode and cancels any existing call forwarding.

It should be noted that operation of the special handsets and overlay network of the invention is transparent to, and will not interfere with, standard cellular network operations.

BRIEF DESCRIPTION OF DRAWINGS

Figure 1 is a system block diagram of one preferred embodiment of the system of the invention;

Figure 2 is a component diagram of a handset usable with the system of the invention;

Figure 3 is a diagram of a handset of the system illustrating the keypad layout and other external features;

Figure 4 is a component diagram of a pico station of the system;

Figure 5 is a block diagram of a service control unit configuration of the system;

Figure 6 is a component diagram of an alternate line option module usable with the system of the invention;

Figure 7 is a flow diagram of the operation of the pico station in the Set up and Activation function;

Figure 8 is a flow diagram of the operation of the pico station in the pico station Configuration function;

Figure 9 is a flow diagram of the operation of the pico station in the handset Authorization function;

Figure 10 is a flow diagram of the operation of pico station during the Scan Channel function;

Figure 11 is a flow diagram of pico station operation during Call and Idle Loop function;

Figure 12 is a flow diagram of pico station operation during Call Origination and Call Joining function;

Figure 13 is a flow diagram of pico station operation during Call Termination function;

Figure 14 is a flow diagram of handset operation during Initialization and service determination function;

Figure 15 is a flow diagram of handset operation during monitor pico station and find channel function;

Figure 16 is a flow diagram of handset operation during handset Authorization function;

Figure 17 is a flow diagram of handset operation during handset Registration function;

Figure 18 is a flow diagram of handset operation during handset Reacquire pico station function;

Figure 19 is a flow diagram of handset operation during handset cellular idle, speed dial, and cellular conversation functions;

Figure 20 is a flow diagram of handset operation during dial number entry function;

Figure 21 is a flow diagram of handset operation during numeric entry and non-numeric entry function;

Figure 22 is a flow diagram of handset operation during other portions of call selection and delivery function;

Figure 23 is a flow diagram of handset operation during contact pico station function;

Figure 24 is a flow diagram of handset operation during handset process base order function;

Figure 25 is a flow diagram of operation of the alternate line option module during Initialization, Configuration, and Service Determination function;

Figure 26 is a flow diagram of operation of the alternate line option module during call processing function;

Figure 27 is a bit assignment chart of handset message formats for reverse control channel communications for components of the system operating in the pico mode;

Figure 28 is a bit assignment chart of pico station message formats for forward control channel overhead and registration command words for components of the system operating in the pico mode;

Figure 29 is a bit assignment chart of pico station message formats for forward control channel call processing commands and authorization command words for components of the system operating in the pico mode;

Figure 30 is a message framing chart for forward and reverse channel communication packets of the system;

Figure 31 is a bit assignment chart of service control unit message formats for reverse control channel setup and control command words for communications with the pico station on the overlay network;

Figure 32 shows a flow diagram of a call connected process performed by the pico station; and

Figure 33 shows a flow diagram of a normal conversation function performed by the handset.

BEST MODES FOR CARRYING OUT THE INVENTION

Systems Overview

The system of the invention includes a combination of elements that produce economical, convenient telecommunications services in the home, or at another customer site, as well as when the customer is away from the home site.

From the service provider point of view, the system of the invention is designed to provide a special service to a select group of customers, and yet operate in conjunction with and within a standard radiotelephone network such as a cellular network of either analog or digital configuration that concurrently supports regular cellular customers. In addition, the system generally includes an overlay cell network generally corresponding to the cell sites within the cellular standard network. The overlay cell network provides radio communication coverage to a geographical area that generally corresponds to the cellular site area, but on a set of reserved cellular frequencies that are selected with the maximum permitted separation with respect to the cellular signaling frequencies, so as to be non-interfering. A pico station is provided at each selected customer site to interact with a conveniently located overlay cell. The pico station receives calls from a special handset and transfers these calls through the house wiring to the PSTN. In this manner, the system is capable of supporting a wireless or pico mode of operation for the select group of customers when they are at their home or service site, in addition to the service provided on the standard network.

The improved wireless communications system is capable of supporting multiple, dual mode telephone handsets associated with each pico station, with each handset being capable of operating in a pico mode when within the customer premises; and capable of operating in a standard or cellular mode when located away from the customer premises, and yet still within the standard or cellular network coverage. The advantage of this system is that it is able to handle a substantial increase in call traffic since it permits efficient utilization of all the facilities of the system.

The pico stations are spectrally dynamic, non-capturing, network transparent, personal pico cells within the network.

System Components

Referring now to the drawings and particularly to Figure 1, a preferred embodiment of the invention will be described. Figure 1 shows one of many cellular switches or cell sites 10a of an existing cellular system. The cell site could be configured for standard operation of AMPS, or TDMA or CDMA digital service, of conventional design. EIA or TIA Standard 553, defines Specifications for Mobile Station and Land Station compatibility of Cellular Systems with which all licensed cellular operations within the United States comply. The system of this invention is intended to adhere to these standards or to be compatible therewith.

The cell site illustrated can also be the physical residence of an overlay cell and antenna 10b which provide radio coverage of the same general geographical area as the cellular site.

However, the overlay cell operates on a set of reserved frequencies that are selected to have suitable frequency separation with respect to the cellular frequencies, so that they do not interfere with cellular radio operations. At least one channel is reserved for command purposes only, and the other reserved channels can provide both call and command capability. In this regard, it should be further recognized that all communications from handset to pico station are on the reserved call channels with the exception of authorization communications, whereas service control unit to pico station communications are predominantly command channel only communications.

Standard cellular frequency allocations are specified in EIA-553 section 2.1.1.1. In the preferred embodiment, the reserved common control channel selected for B-Side use is 799 which is the channel most removed from the B-Side signaling assignments. The reserved call channels for B-Side will typically be channels 798-789.

For A-Side usage, the reserved common control channel is 991 which is selected to obtain the maximum separation from the A-Side signaling assignments. The reserved call channels for A-Side will typically be 992-1001. Clearly, fewer or additional channels could be reserved, with six to twelve channels being a preferred range.

Alternatively, a separate geographically located array of overlay cells could be utilized, as compared to cellular cells, as long as radio coverage generally comparable to the geographic area of the related cellular network is attained.

A pico station 26 is provided at a customer location that is interconnected with the PSTN by a cable passing through a standard RJ11 interface connected to the existing house telephone wiring. In the embodiment illustrated, an alternate line option module 22 is connected between the pico station and the PSTN 20 via a cable 24. The alternate line option module resides on or near a customer location, which may represent a residential premises or a business premises in this preferred embodiment. A standard wireline telephone handset or handsets can be interconnected with the house wiring as shown, if desired, although such is not required. If desired, the alternate line option module may be omitted from the system, or deployed selectively, with or without an associated pico station on the same premises. Thus,

the alternate line option module is an independent device capable of use with any device interfaced with the house wiring.

Up to six dual mode portable handsets (32a-f) are provided, each being associated with the pico station, and being capable of operation in dual modes under the support of the pico station and control of a service control unit as will be explained in detail hereinafter.

In a first mode, each portable handset functions as a portable cellular telephone operated through a direct wireless connection to cell 10a. In a second mode, the handset functions as an enhanced cordless telephone supported by the pico station at the customer premises. In the latter or pico mode, call delivery can be provided to the public switched telephone network via a connection from the pico station through the wired telephone service in the home, in effect using a combination of wireless and PSTN support. If the alternate line option module is provided in the system, it provides yet a further capability of selectively channeling calls to and from the handset via the pico station, the alternate line option module, and over the cellular network represented by cell 10a, on the indicated wireless link.

At least one service control unit 12 is provided for each overlay cell, associated with the system through a cabled connection to the cell site, and a personal computer 16 is associated with the service control unit also via a cable connection. The service control unit is connected through the PSTN and a cabled connection 14 to a host station 17 having a work station 18 associated therewith. The host is further connected via a standard X.25 channel to a customer activation system 23, such as are commonly employed by cellular carriers to control the activation and programming of cellular handsets permitted to function on a given cellular network. The remote programming functions of the host system are suitably fulfilled by a subsystem such as is described in U.S. Patent No. 5,046,082, previously referred to, and hereby incorporated by reference.

Referring now to Figure 3, a handset for the system is illustrated including an outer case 31, a keypad 32, an antenna 34, and a display screen 35. The keypad includes a standard twelve key portion 38, a power switch 39, and a clear key 40. The usual "send" key is replaced with a green key 41 bearing a special logo and the "end" key is replaced with a red key 42 also marked with a special logo. The green or off hook key, when depressed, serves to initiate dial tone and start a call sequence. The red or on hook key 42, when depressed, terminates a call sequence.

The handsets vary from standard cellular exterior design only in the variation of function keys 41, 42 and in that the handset provides precision dial tone, through use of the standard DTMF generator of the handset in accordance with flow processing control explained in connection with Figure 20, herein, since the handset does not contain a send key. The dial tone is used in conjunction with the North American Numbering Plan function to detect completion of dialed number status. Consequently, the handset dial plan differs from standard cellular dialing in that the handset generates local dial tone immediately when placed off-hook to indicate to the user that service is available and a call can be placed. The dialing process

then follows the standard PSTN practices (of off-hook, dial tone, dial number, call progress, connection, conversation and on-hook), with which telephone customers are familiar.

The handset also includes the capability to display for the user which mode of operation the handset is currently set to provide, i.e. pico or cellular. This information, as well as other message information, is displayed on the standard LCD display screen 35 on the handset (for example, suitable messages would include, Wireless = Home #n; Neighborhood Cellular = Local; Cellular = PREMIUM). The displayed status information allows the user to make informed decisions when placing or receiving calls, especially if special service provider rate plans are available.

Referring now to Figure 2, a component diagram for a handset is illustrated, which is similar to that of a conventional cellular handset. An antenna 50 is connected to a duplexer 52, that is in turn connected to a receiver section 54 and a transmitter section 55. A speaker 56 is connected to the receiver and a microphone 57 is connected to the transmitter. A central processing unit 58 is interconnected with both the receiver and transmitter sections by an input/output buss and by an address/data buss. A display processor/keypad section 59, is also interconnected to the I/O buss in conventional fashion. A non-volatile memory EEprom 53 is also interconnected to the A/D buss in conventional fashion.

Each handset is assigned a unique Mobile Identification Number (MIN) that is used by the cellular system as the handset telephone number. When the handset transitions from the cellular system service to the pico station for pico mode service, the handset automatically informs the cellular system to forward any incoming calls placed to its MIN to the PSTN telephone number associated with the instant pico station it is switching to. This process is reversed each time that the handset transitions back into the cellular system service area and out of the pico station or pico mode service area, as is explained in connection with flow process descriptions hereinafter. The special functions of the handset are accommodated by added software executed by the handset central processor.

Referring now to Figure 4, a component diagram for a pico station is illustrated, including an antenna 60, connected to a duplexer 62, that is in turn connected to a receiver section 64 and a transmitter section 65. A central processing unit 66 of standard configuration is provided, and a standard telephone line interface module 72 is connected to the receiver section and the transmitter section by audio cables 68, 69 respectively. The interface module is also connected to the house telephone line which connects to an alternate line option module , if desired, as is illustrated in Figure 1. An I/O buss is interconnected between the transmitter and receiver section and the central processing unit, as is an address/data buss. Also connected to the A/D buss is a non-volatile EEprom 70. A status LED 73 and an authorization mode push-button 74 are respectively connected to the I/O buss.

The purpose of the pico station is to provide an interface between each of its authorized handsets and the customer site PSTN telephone line, or the cellular system if it is so configured. Each pico station is designed to support up to six handsets and each handset can

be authorized for use with up to three pico stations to provide customer flexibility. The pico station preferably operates in the cellular spectrum and always functions as the land station device during communications sessions with the handset in the pico mode. However, unlike standard cellular land stations, the pico station operates in a pico mode and does not transmit a continuous overhead message data stream on a known channel for the handset to lock onto. Instead, the pico station and each handset utilize a unique operating protocol with burst mode communication to locate and access each other only when communication between those specific units is desired. This results in significant system improvement in that channel usage is dedicated primarily to call exchange. In addition, handset battery capacity is conserved.

This unique operating protocol is initiated by the originating device (either the pico station or the handset) after the originating device selects a communications channel from one of the plurality of reserved channels. The channel selection process is dependent upon the originating device measuring the strength of any signal present on the selected channel and comparing this measurement to a predetermined acceptable value. If the signal present on the selected channel is less than this predetermined value, the channel is considered to be available for this communications session. If the level is greater than the known value, the originating device selects another channel from the plurality of known communications channels and performs the measurement and comparison procedure again, until an acceptable channel is located. The selected channel is occupied only for the duration of the communications session and then vacated. Once it is vacated, any nearby pico station or handset that was avoiding this channel due to measured signal presence, can now use the channel for a corresponding communications session, and then release it in turn.

Both the pico station and handset utilize very low transmit power. This fact, coupled with the unique channel selection process and other advantages of the system, allows a relatively small number of channels to serve a very large population of customer sites. Another benefit of the dynamic channel selection and usage protocol is the elimination of effort currently required to preassign radio channels in adjacent pico cell areas to avoid interference that is experienced in standard cellular land station systems. This elimination of frequency planning simplifies the deployment of the system, allows it to be used successfully in neighborhoods, and allows the public to rapidly avail itself of the benefits this system provides.

Activation and positive control of the pico station is maintained by the cellular service provider through the use of a service control unit such as that illustrated in Figure 5.

Referring now to Figure 5, it includes a number of elements that are illustrated in Figure 1, being designated by like numbers in Figure 5. Figure 5 illustrates, in addition, a mobile service control unit 80 useful with fixed unit 12. Unit 80 comprises a mobile vehicle including a personal computer 80a interconnected with a cellular mobile radio unit 80b having a design similar to a handset, particularly in that it further includes the necessary software capability to perform pico mode overhead control operations in addition to standard cellular overhead protocols.

In the embodiment illustrated, the mobile unit provides service control unit function to pico stations which may be out of reach of a fixed service control unit; or alternatively mobile units can be used in lieu of a fixed service control unit such as is indicated by numeral 12. When a mobile service control unit is utilized, it operates with a communication path from host station 17 through the PSTN to cellular cell site 10a. A communications path is then established between cell site 10a and unit 80 via a standard cellular wireless link. To communicate with and to control a pico station, unit 80 uses a wireless link on one of the pico frequencies that is selected to be the dedicated control channel identified as a common setup and control channel hereinafter. This wireless link follows a unique communication protocol as described in detail hereinafter which is compatible with the pico mode protocols, but is a special subset thereof. The message formats for this protocol are illustrated, in particular, in Figure 31.

When the fixed service control unit 12 is utilized, a transmission link from host station 17 through the PSTN to the service control unit is utilized. In addition, the service control unit is connected via a cable to cell 10b of the system. Communication from the service control unit to the pico station is then effected via a wireless link from cell 10b to the pico station using the dedicated control channel and the word operating protocol illustrated in Figure 31.

It should be apparent that the fixed service control unit would be the preferable manner of communicating with pico stations. However, in the initial stages of installation of a system where gaps exist in the overlay network, it may be necessary to use one or more mobile units. Alternatively, both mobile units and fixed units could be used interchangeably or in the same general area. It should also be recognized that when a mobile unit is utilized, it can depend entirely upon transmissions from the host station or it can convey to the selected pico station information which is preloaded in the mobile unit by cassette or other media loaded on the PC. The same capability is possible for the fixed service control unit.

At a minimum, one of these devices needs to be located within each cell site serving the neighborhood in which the pico station is deployed. With essentially ubiquitous cellular system coverage, every household in an urban or suburban area is illuminated with cellular radio energy. (Most rural households also fall within the service contour of a typical cellular provider and could also be provided with this service option). The service control unit capitalizes on this situation to contact any pico station within its territory using the reserved channel wireless link between cell 10b and the pico station to activate, update, audit and control its functions and operation.

Like the handset in the pico mode, the control unit also utilizes a unique operating protocol during its communications sessions with the pico station. These sessions, however, always occur on the common control channel reserved for this purpose. Service control unit initiated activation sessions remain entirely on the common control channel. All other control unit sessions are initiated on any idle channel within the desired pico station's known multiple channels, and then move immediately to the common control channel for culmination. Any

pico station can also initiate a session with the control unit by transmitting its request on the common control channel whenever this channel is idle.

The service control unit is linked to a centralized host station which maintains a data record of all active pico stations and handsets within the cellular carrier's service area. The host station, in turn, is linked to the central cellular customer activation system (of the carrier) through which the host station receives data on the sale of each pico station and handset. This data is utilized by the host station during activation of each pico station and for control of the services provided. Through the customer activation system, the host station also is updated with changes to the customer's service profile. These updates are immediately passed by the host station to the appropriate pico station via the control unit.

The elements of the alternate line option module are depicted in Figure 6. As shown, the PSTN is connected via cable 82 to a network interface device 83. The network interface device is provided by the local exchange carrier as the demarcation device between the local exchange carrier facilities and the house wiring within the customer premises. A telephone line interface module 84 is connected to the output of the network interface device via cable 24. Connection to the house wiring 86 is provided from the output of the telephone line interface module via cable 25.

The alternate line option module contains a central processor unit 97 which controls all of the elements of the alternate line option via the input/output buss 99 and the address/data buss 98. The controlled elements are the cellular receiver unit 88, cellular transmitter unit 91, a talk battery substitution module 96, a 90vac ring voltage generator 95, a precision dial tone generator 94, red/green status LED 101, remote programming modem 104, real-time clock 106 and telephone line interface module 84.

The cellular receiver 88 and transmitter 91 are connected to the antenna duplexer 93 through cables 89 and 92 respectively. The duplexer 93 is also connected to the captive antenna 100 through cable 105. An audio pathway for receive audio to the telephone line interface module is provided by conductor 87. The transmit audio pathway is via conductor 90.

The central processing unit 97 has an integral microprocessor which also contains RAM for working registers, ROM for program storage and EEprom for non-volatile data storage.

The alternate line option is normally powered from the ac power supply 102 but it also contains a back-up battery 103 capable of providing about one hour of continuous operation in the event of ac power failure.

System Protocols

All overlay network and pico mode operational protocols of the system are implemented via a common air interface which utilizes a 10Kbit Manchester encoded data transmission methodology integral to cellular telephony. This implementation allows for less expensive hardware since processing of 10Kbit data messages is already a requirement for all

cellular stations. Consequently, no additional hardware need be added to the handsets to accommodate this protocol.

The system message format is consistent with standard cellular telephone format, but message contents are unique between the overlay network elements. Overlay network elements always utilize channels that are reserved exclusively for them while they are communicating with each other. Therefore, compatibility has been provided between current cellular protocols and the protocols of this new system. The benefit of such an implementation lies in the fact that any of a multitude of existing cellular telephone manufacturers can supply handsets simply by modifying their operating handset software to support the added overlay network protocols.

In the cellular mode, the base station acts as the land station and provides control over all transmissions of both land station and handset. In the pico mode, the unique protocol establishes the handset and pico station in a first to initiate, control relationship. Specifically, on outbound calls directed to the handset, the pico station has dominant control under the protocol. With respect to inbound calls, the handset exercises the dominant control under the protocol.

In the service control unit-pico station relationship, the service control unit is the master and the link between those units consists of the 10k bit Manchester encoded data stream. It should be recognized that this is a reverse hierarchy of control as compared to existing cellular systems.

In the host-service control unit relationship, the host exerts the dominant control influence and initiates messages based upon the traffic availability. As described in U.S. Patent No. 5,046,082, the communications connection between these units follows a modem based dial up protocol using a unique DTMF arrangement.

The direct application of this patented technique for remote programming has been improved in the present system through the elimination of data modem requirements in the downloading operations of the system control unit-pico station link. The modem requirement is further eliminated in the pico station-handset link during downloading operations. This is accomplished by transforming the unique DTMF modem access activation command sequence that the service control unit receives from the host into parameter information message formats of the unique enhanced or pico protocol.

The same message formats are then used in remotely programming the handset. Consequently, the handsets are no longer required to contain an inband modem. This elimination of hardware removes a previously existing practical constraint from this system against the use of remote programming on handsets. This, in turn, makes remote programming of handsets cost effective.

With the system as presently configured, it is intended that each member of the household will have a handset assigned for his or her personal use. With the system in its

presently described configuration, only a single call can be in process at any one time. However, provision is made for more than one handset to be interconnected to a given call.

Other options are described hereinafter with respect to alternate embodiments. In addition, a distinct ringing capability is described such that family members can readily distinguish incoming personal calls.

Each handset is intended to operate in a standard cellular mode when away from the pico station. That operational mode of the handset utilizes the standard cellular overhead messaging protocol of the cellular system. When the handset is brought back within the range of the pico station, it automatically switches to the pico mode under supervision of the pico station. Then the handset operates on the unique control protocol supported by the pico station.

In view of these features, it is necessary for the system to include means for both set-up and operation of the handset in each of the two modes. Furthermore, a unique transition protocol is required in order to enable automatic control and switching of the handset between the two operational modes.

In order to describe all the protocols necessary to operate the system of the invention, the steps necessary to place the handsets and the pico station in use after purchase by a customer are generally described hereinafter. The first step generally involves Activation of the pico station. The procedure for the handsets then involves an Authorization process which is the procedure followed by the customer and the cellular service provider following purchase of the pico station and handset.

These procedures of Activation and Authorization include both the usual customer activation process tasks necessary for operation of handsets in the cellular mode, and special steps which are necessary to set up the pico station and each handset purchased for operation in the pico mode. In addition, the customer must authorize each purchased handset for use with its associated pico stations. Handsets will register automatically when in communications range of the pico station.

As a precursor to Registration of each handset to a pico station, there is a recurring process referred to as Location Analysis, whereby each handset detects that it is in a cellular coverage area of the cell site that also covers one of its authorized pico stations. This alerts the handset that it is in its home neighborhood and may now be within radio range of the pico station with which it is authorized to function. Only then will the handset attempt to contact its authorizing pico station. This location analysis process occurs automatically each time the handset is placed in use, and constantly during its cooperation with the cellular system if the handset is moved from location to location by the customer. Its use within the system eliminates a substantial amount of crosstalk or interference that inherently exists under other dual mode systems being considered in the industry. In addition, location analysis conserves handset battery capacity and enhances call traffic capacity of the reserved channels.

After successful Registration in the pico mode, the handset operates in various states. A Reacquire function is performed periodically by the handset to maintain the handset's registered status with the pico station. This process is timer activated and is another burst mode communication process designed to limit channel usage for non-conversation purposes, as explained in the Figure 18 flow process. In an idle state, the handset is available for general use. In addition, the handset is capable of joining a call in progress, capable of a call origination process, and capable of a call termination process, through specific process task flows that are described in detail hereinafter.

As previously explained, when purchased the pico station is not yet activated for use by the consumer. The Activation process is performed "over the air" by one of the service control units. The cellular carrier providing the pico station service selects and reserves a single control channel for use by all service control units and pico stations. This common control channel is known to the pico station. Each pico station is also assigned a unique 22 bit electronic serial number (ESN) by the manufacturer. The pico station ESN is captured at the point of sale by the customer activation system and transmitted to the selected system host station along with the address and telephone number of the location where the pico station is intended for use. The customer activation system also transmits to the host station the MIN and ESN of each handset which is authorized to use this pico station.

In response, the host station examines the pico station location address and selects the most appropriate service control units for contact with the pico station. The host station then issues a command to these selected service control units ordering a Locate task of the target pico station to be executed.

The involved service control units then each periodically issue on the common control channel, an Undeniable Access Message addressed to the targeted pico station as identified by its ESN. This process is repeated until contact with the targeted pico station is achieved.

It should be recognized that the Undeniable Access Message ESN field could additionally be partially or wholly encoded, using various public-private key arrangements. If used, such encoding provides a control access security capability to the cellular service provider which can be used alone or in combination with the security inherent in the described remote programming system access arrangement, thereby yielding a double level of security protection.

In order to receive the Undeniable Access Message when the consumer installs the pico station at the intended location and connects its power supply, the pico station will immediately enter an Initialization task. The central processor of the pico station then performs internal housekeeping chores to place the pico station radio and telephone line in an idle state. The central processor of the pico station then uploads the contents of its EEprom to determine the pico station operational status. If the pico station is not yet configured, a Pre-Configuration task is entered. In that event, the central processor instructs the pico station radio to

alternately tune to the known A-side, and then the B-side control channel to check for contact from the service control unit.

Upon receipt of an Undeniable Access Message addressed to its pico station ESN, the pico station transmits, at its full power, a Communication Setup Message (ACK) to the service control unit. When the ACK is received, the service control unit measures the received signal strength of this pico station ACK signal and issues an End Session command to the pico station. The service control unit then reports to the host station the results of its Locate task.

The host station, in turn, analyzes the results from all instructed service control units and selects the one reporting the highest ACK signal strength to be the service control unit to serve this pico station location.

This location verification process ensures the cellular service provider that the customer supplied address information is correct, as each Undeniable Access Message is targeted to a specific portion of the overall cellular system coverage. The host station then transmits to the selected service control unit all operating parameters that need to be forwarded to the selected pico station. This data is transmitted in the form of an Activation Command Sequence.

Upon receipt of an Activation Command Sequence, the selected service control unit queues up a pico station Configuration session for the targeted pico station. The service control unit initiates this session by first transmitting an Undeniable Access Message addressed to the targeted pico station. Upon receipt of the corresponding pico station ACK, the service control unit will pass to the pico station the parameter information defined in a Parameter Information Message format described hereinafter.

The pico station again replies with an ACK message upon receipt of each Parameter Information message. A Non-Acknowledge (NAK) message from the pico station results in the service control unit retransmitting the Parameter Information message again. When all messages are successfully transmitted, the control unit issues an End Session command to the pico station. The service control unit then reports the successful activation process status of this pico station to the host station and saves to its memory a data file for this pico station containing the assigned parameters.

The consumer must also Authorize each handset for use with the pico station. This process is instituted to prevent unauthorized usage of the pico station and the associated telephone line. To initiate this process, the handset must be powered on and the "Base Station auth" selection made from the handset menu function. The handset must then be brought into close proximity of the pico station, since the process is performed at extremely low transmit power levels to prevent unintentional access to any other nearby pico station.

Accordingly, the pico station, upon receipt of its configuration, enters a Pre-Authorization status, and awaits depression of its authorization button, or further contact from the service control unit. The pico station changes the associated status LED from red to green.

The customer then depresses the authorization button on the pico station until the associated status LED flashes green to indicate that the process has been initiated. The handset display will also flash while the authorization session is in progress. The handset must remain in close proximity to the pico station for three to seven seconds of process duration. The pico station utilizes the known common control channel for this Authorization process exchange.

During the authorization process, the pico station captures and verifies the MIN and ESN of the handset against the list of allowable handsets it received from the service control unit. Should a given handset not be on the list, the process related to it is aborted without authorizing the handset. If the handset was expected, the pico station will pass to it the parameter information listed utilizing the Parameter Information Message format described hereinafter.

The handset sends an ACK message response for each Parameter Information Message as it is received. Should the handset NAK a message, the pico station will retransmit that message. Upon completion of all messages, the pico station issues an End Session command to the handset to terminate the process. This returns the status LED of the pico station to a steady green condition, to indicate the end of the process. The handset and pico station then return to their respective Idle states.

Certain messages are referred to in the process flow descriptions of Figures 7-26. These messages are all constructed of words illustrated in Figures 27-31, as previously indicated.

Figure 27 depicts the generalized formats for handset special data message words utilized during the pico mode of operation. Items are shown with reference to their actual position in a data message sent from the handset to the pico station over the reverse channel direction of the channel in use.

All words depicted in the Figure follow the general format requirements of EIA-553 Standard - Mobile Station - Land Station Compatibility Specification.

A handset data message may consist of one, two or three words sent as a packet on the reverse channel to pass communications to the pico station. The word position assignment for each item of Figure 27 is always the word position that particular data word will assume in the created data message, as indicated by the word number. Each of the illustrated fields within a depicted word is identified with the standard designation for that field as specified by EIA-553.

In order to facilitate the understanding of the message words illustrated, certain key fields are explained herein.

The Field NAWC = Number of Additional Words Coming and will reflect the total remaining word count in every transmitted message word. The order field, when included in a word, shall always be set to 11110 which indicates a Local order which is not to be confused with a Network order. The field ORDQ = Order Qualifier and is set to 000 in all cases except the Best Server and Parameter Information commands where it is set to 001. The field Local,

when included in a word shall contain the five bit Local Order pattern identifying the specific command to be executed.

It should be recognized that all Figure 27 words are directed only to the pico station, and never to the cellular network. Item 2701 is known as the Abbreviated Address Word and is utilized as a single word command response message; the first word of each two word Access Attempt message; and the first word of each three word Identification command response message.

Access Attempt messages are used for Authorization, Registration, Re-Acquisition, Call Origination and Call Termination events. To facilitate the understanding and identification of the specific messages involved in each communications process, the messages related to Figure 27 are therefore listed hereinafter. The Authorization Access Attempt message consists of 2701 (word 1)and 2707 (word 2) sent as a two word message (I'll Take It). The initial Registration Access message consists of 2701 (word 1) and 2703 (word 2) sent as a two word message (Here I Am1). The handset Re-Acquisition Access message from the handset consists of 2701 (word 1) and 2704 (word 2) sent as a two word message (Here I Am2). The handset Call Origination Access attempt that occurs prior to collection of the dialed number consists of 2701 (word 1) and 2705 (word 2) sent as a two word message (I Want In1). The handset Call Origination Access demand message that occurs after dialed number collection consists of 2701 (word 1) and 2706 (word 2) sent as the first two words in the message (I Want In2). The handset Call Termination Access Attempt message consists of 2701 (word 1) and 2707 (word 2) sent as a two word message (I'll Take It).

Item 2702 is known as the Parameter Information Acknowledgment word and is always sent as a one word message in response to the pico station during the Authorization process of downloading the handset with the operating parameters needed for pico mode operation. This single word response message utilizes bit positions 26 through 36 to ACK or NAK receipt of a Parameter Information message from the pico station. Bit 26 (X) is set to 0 to indicate ACK and 1 to indicate NAK. Bits 27 and 28 (AA) are set to 00 to ACK/NAK last order and 01 to ACK/NAK last Parameter word. Bits 29 through 36 (ZZZZZZZZ) are set to the Parameter Information Identity (PID) of the NAK'd data.

Item 2708 is known as the Best Server response and the eight bits, 19 through 26, are encoded as follows: bits 19 & 20 (DD) = Digital Color Code of the Best Server (0 to 3); bit 21 = 0; bits 22 through 26 (NNNNN) = 5-bit offset count of the Best Server Channel Number from the Initial Paging Channel for the serving cellular system. i.e. 00000 = 334 for B-Side or 333 for A-Side while 10100 = 354 for B-Side or 313 for A-Side.

Item 2709 is known as the Extended Address word and will always occupy word position three when it is incorporated into a data message from the handset to the pico station. This word is requested from the handset by the pico station to allow capture of the handset electronic serial number for comparison with the list of allowed pico station users to prevent

unauthorized system access. The handset includes word 3 in its Full Registration message to the pico station.

Figure 28 depicts the data message elements utilized by the pico station in the creation of its Overhead (OHD) and Command words sent to the handset. These words are forty bits in length as opposed to the forty-eight bit words used by the handset.

Figure 28 items are depicted with their message position defined. Item 2801 (OHD word 1), 2802 (OHD word 2) and 2804 (OHD Control Filler Word) follow the EIA-553 Standard exactly. Item 2803 (OHD word 3) has been established to allow the pico station to transmit a unique identifier in the form of a twenty-two bit base serial number to allow the handset to recognize its associated pico mode pico station during those brief periods when the pico station is actually transmitting an overhead message stream.

Item 2805 (Command word 1) follows the EIA-553 Standard exactly, and is utilized by the pico station as a Single Word Command for page of handset and as the first word of multiple word commands issued to the handset.

Item 2806 (Command word 2) is the second word of the two word Best Server Command issued by the pico station to the handset.

Item 2807 (Command word 2) is the second word of the two word access acceptance message issued by the pico station to the handset when access to the pico station is denied.

Item 2808 (Command word 2) is the second word of the two word Access Acceptance message issued by the pico station to the handset when Access is Accepted and the line is Idle. Local field NNN = 000 through 101 as the assigned home unit number for this handset Access.

Item 2809 (Command word 2) is the second word of the two word Access Acceptance message issued by the pico station to the handset if the Line Busy condition exists. Local Field NNN = 110 if a Handset Busy condition exists.

Figure 29 depicts additional pico station Command words utilized in communications with the service control unit and with the handset in the pico mode of operation.

Item 2901 (Command word 1) is the single word attention message sent to the service control unit on the common control channel to request service.

Item 2902 (Command word 1) is the first word of multiple word response messages sent to the service control unit during configuration/update sessions.

Item 2903 (Command word 2) is the second word of the Audit Acknowledge sent to the service control unit during Locate session.

Item 2904 (Command word 3) is the second word of the two word ACK/NAK response from the pico station to the service control unit during configuration/update sessions.

Item 2905 (Command word 2) is the second word of the multiple word Parameter Information Transfer process executed during the handset Authorization function. This Command alerts the handset to the following Parameter Information commands.

Item 2906 (command word 3 - N) is the Parameter Information Command word which will contain the Parameter Information Identity field (PID) and the Parameter Value field (PVAL) described in Table 1 below.

TABLE 1

PID	PARAMETER NAME (PVAL)	BIT/LNGH
00000001	Number of Channels to use	5
00000010	Transmit Power Level	3
00000011	ACCESS threshold RSSI	8
00000100	WARNING threshold RSSI	8
00000101	HANGUP threshold RSSI	8
00000110	RSSI SAMPLING interval	4
00000111	RSSI AVERAGING count	4
00001011	Base phone number NPA	12
00001100	Base phone number NNX	12
00001101	Base phone number LINE	16
00001110	Handset pico station count	2
00010001	Best Server IDENTITY	9
00010010	Call Forward ON command	16
00010011	Call Forward OFF command	16
00010100	Handset REGISTRATION number	3
00000000	END OF SESSION (11111111)	

Figure 31 depicts the data message elements utilized by the service control unit in communications with the pico station. These words are forty-eight bits in length.

Item 3101 is known as the Undeniable Access Message and is sent as a single word command.

Item 3102 is the first word of Multiple Word Command messages issued by the service control unit to a specific pico station.

Item 3103 is the second word of the Parameter Information Command message.

Item 3104 is the second word of the ACK/NAK Response message sent to the pico station upon receipt of requested data.

Item 3105 is the second word of the two word Shutdown Command which forces the pico station to cease all pico operations and to monitor the common control channel for further instructions.

Item 3106 is the second word of the two word Reset Command which forces a reset to occur in the pico station.

Item 3107 is the second word of the two word Full Audit Command which instructs the pico station to reply with traffic, operational parameters, faults and diagnostic information.

Item 3108 is the second word of the two word Partial Audit Command which instructs the pico station to reply with traffic, faults and diagnostic information.

Item 3109 is the second word of the two word End Of Session Command which releases the pico station from this communication session.

Figure 30 depicts the data message formats and timing for both the Forward channel direction (pico station to handset) and Reverse channel direction (handset to pico station). As shown, the data message formats follow exactly the EIA-553 Standard as to their transmission time durations and their data word repetitions and order.

One difference between the Land Station protocol for cellular as defined in EIA 553, and the base station protocol involves the simultaneous transmission of commands issued to a target handset over both the word A and word B streams within the Forward Command Channel format, which disregards the normal cellular land station stream assignment which is based on the MIN of the target handset. Cellular land stations issue separate commands to two different handsets via the word A and word B streams.

Another difference with respect to the mobile station protocol for cellular versus the handset-pico mode protocol includes use of coded Digital Color Code field in the Reverse Control Channel message stream. In the pico mode, this field is set to all 1s during the Access attempt message transmission, and it is set to the target pico station assigned Digital Color Code for all other message transmissions. This is done purposely to prevent the network cellular system from erroneously attempting to process this pico mode access event should signal mixing cause the message to be picked up by the cellular network.

Pico Station Configuration Process

Referring now to the drawings, and particularly to Figures 7-13, the process steps of operation related to the pico station will be explained in more detail. Figure 7 represents the main idle loop of the program. The pico station Activation function is divided into the Configuration process represented in Figure 8, and an Authorization process represented in Figure 9. Call Processing functions are illustrated in Figure 10-13, respectively.

Obviously, as purchased, the pico station is not yet activated for use by the consumer. The Configuration function is a process to be performed "over the air" by the service control unit after the pico station is located at the premises where it is to be used. As previously explained, a number of service control units and a host station are located in each overlay cell area which serves pico stations, with the host including a server for generation of a list of service control unit locations available to reach a given pico station location.

The base station Activation function involves the overhead events associated with the standard customer activation system employed by the carrier or service provider for the cellular system. In this regard, the customer activation process largely encompasses the

process used by standard cellular carrier systems to identify and authorize for service all standard cellular phones as they are activated. In addition, the pico station ESN is captured at the point of sale by the customer activation system. The customer activation system passes this ESN to the service control system host along with the address and telephone number of the location where the pico station is intended for use. The customer activation system also passes to the service control system host the Mobile Identity Number (MIN) and ESN for each handset which is authorized to use this pico station.

The control system host examines the pico station location address and selects the most likely service control units through which contact between the associated control unit and the targeted pico station can be accomplished. The system host then issues a command to each selected control unit ordering the Locate task to be accomplished for the target pico station. Each selected control unit then periodically issues, on the common control channel, an Undeniable Access Message addressed to the targeted pico station ESN. This message will periodically be repeated until control contact with the targeted pico station is accomplished.

Referring now to Figure 7, when the consumer installs the pico station at the intended location and connects its power supply, the pico station enters an initialization task 701. Upon power-up, the pico station's central processor then issues a power-on reset command and initiates a task 702 which performs certain internal housekeeping chores to place the pico station radio and the telephone line interface of the pico station into their idle state. The pico station central processor then uploads the contents of its EEprom in process task 702 and initiates task 703 to determine the pico station operational status.

If the operational status check in query task 703 determines that the pico station is not yet configured, a pre-configuration task is entered at process task 705 and the status LED is set red. During task 703, if it is determined that operation of the pico station has been configured, then query task 704 is initiated to determine if the handsets associated with the pico station have been authorized.

If a No determination is reached during task 704, or a Yes determination is reached during task 710, the pico station enters task 715 during which it is tuned to the common control channel. Following task 715, a query task 716 determines whether pico station access is required by the service control unit.

If access is not required, the pico station proceeds to set up for the handset Authorization process of Figure 9. If access is required, the pico station accommodates the service control access needs as illustrated in Figure 8.

If task 704 indicates that the handset was authorized, this means that at least one handset has been successfully downloaded with pico mode operating parameters during an Authorization process. A Yes result from query task 704 initiates query task 710 to determine if the red authorization button on the pico station has been depressed. If the button is not depressed, a query task 711 is entered to determine if the telephone line status has changed. If the telephone line status is new, a task 712 is entered during which each registered handset is

updated to this event and the pico station is returned to the idle state through the scan channels routine. If the telephone line status is unchanged as determined by task 711, the pico station proceeds to the Scan Channel process in Figure 10.

If operation is not enabled, query task 703 initiates process task 705. During task 705, the pico station central processor instructs the radio pico station to alternately tune to the known A-side common control channel and then to the B-side common control channel to monitor whether overhead messages are being received from the control unit.

Query task 706 is then executed to determine if the control unit is present. If a negative response is indicated, a loop return is executed to the start of task 706 and the query task is repeated until the control unit is found. If a positive response is identified, task 707 is entered to determine if an Undeniable Access Message from the control unit is addressed to the selected pico station in view of the subject ESN. If not, a loop back to the beginning of task 706 is executed.

If an Undeniable Access Message from the control unit is addressed to the target pico station, the pico station proceeds to the Configuration process in Figure 8. There, the pico station then transmits, at full power, a Communication Set-up Acknowledge Message to the control unit. The control unit measures the received signal strength of this pico station signal and then issues an End Session Command to the pico station. The pico station then exits the Configuration process and returns to the Main Loop entry gate 720.

Upon issuing the End Session Command to the pico station, the service control unit reports to the host the results of its Locate Command. The host, in turn, analyzes the results from all instructed service control units and selects the one receiving the strongest signal from the pico station to be the primary control for this pico station location. The system host then transmits to the selected service control unit all operating parameters that need to be forwarded to the pico station. This data is encompassed within an Activation Command Sequence.

Upon receipt by the service control unit of the Activation Command Sequence, the following events are initiated. The control unit queues up a pico station Configuration session for the targeted pico station. The control unit initiates this session by first transmitting an Undeniable Access Message addressed to the targeted pico station on the common control channel. The pico station responds with a Communication Setup Acknowledge message as represented in process task 802 of the pico station Configuration process.

Upon receipt of the pico station Communication Setup Acknowledge command, the control unit transmits to the pico station the parameter information using the standard Parameter Information Message format, after which the pico station acknowledges the receipt of the parameter information messages.

The rest of process task flow for the Configuration process is further illustrated in Figure 8. Process task 801 proceeds to process task 802 to perform the control unit access function during which the Communication Setup Acknowledge is sent to the control unit. A

query task 803 determines whether this is the initial Configuration process performed by the pico station. If it is not, a start command timer task 804 is initiated. If it is the initial Configuration process, a task 805 is entered to clear the EEprom ram image registers of the pico station. Following clearing of the registers, task 806 captures and acknowledges receipt of the best server identity. A task 807 then captures and acknowledges receipt of the power level assignment. Following task 807, a task 808 captures and acknowledges receipt of the operating channel numbers for the pico station, and a task 809 captures and acknowledges handset assignments. A task 810 then captures and acknowledges operating mode assignments and the End Session command and a task 811 saves the ram image to the EEprom.

Following execution of tasks 805-811, a task 812 clears all traffic registers in the pico station and sets the status LED to green. Upon successful execution of task 812, the pico station exits back to the Main Loop process task indicated in Figure 7.

Any NAK from the pico station will result in the transmission by the service control unit of a retransmitted Parameter Information Message. If all messages are successful, the control unit will then issue an End Session command to the pico station, and report the activation of this pico station to the system host. The control unit then saves to its hard disk a data file for this pico station keyed to the pico station ESN, containing the assigned parameters for the pico station.

Service control unit access events following initial configuration result in process 804 initiating the Configuration Function Update process which begins with query task 815. Query task 815 determines if a command has been received from the control unit addressed to this pico station. A Yes result will start query task 816 which monitors command timer activity for expiration.

A No result at query task 816 loops back to the start of query task 815 to continue monitoring for control unit commands. Expiration of the command timer forces a Yes result at query task 816 which returns to the Main Loop at entry gate 720.

Receipt of a command will result in a Yes at query task 815 which starts query task 817 to detect new configuration assignments from the control unit. A Yes result to task 817 initiates process task 818 to capture and ACK the changes to pico station configuration.

Process task 818 then starts process task 819 to restart the command timer and then loop back to the start of query task 815 to await further commands.

Should the command not be a configuration change, the No result at query task 817 starts query task 820 which determines if an End Session command has been received.

A No result at query task 820 loops back to the start of query task 815 to await further commands.

When an End Session command is determined at query task 820, the Yes result starts process task 821 to acknowledge the termination of this control unit session.

Process task 821 then starts process task 822 which saves the new configuration data to the EEprom, then returns to the Main Loop at 720.

The pico station, upon receipt of its initial configuration information, can then enter the Pre-authorization task and await manual depression of the authorization button or further contact from the service control unit. The pico station status LED will show steady green indicating to the customer that handset authorization may now be accomplished.

Handset Authorization Process

The consumer must then authorize each of his handsets for use with his pico station. This process is instituted to prevent unauthorized usage of the pico station and the associated telephone line. The process also establishes the overall coverage area within which the pico station and handsets will communicate. The physical location of the pico station is also confirmed during this process, through the comparison of the cellular Best Server information collected from the handsets during the authorization setup process with the information provided to the pico station by the service control unit during the Configuration process.

Referring now to Figures 7, 9, 16 and 19, the Authorization function will be described, including both handset and pico station process tasks.

The handset to be authorized must be powered on and in the cellular idle state indicated at task 1901. Query task 1902 will detect whether the user is pressing the menu key. Query task 1903 then monitors for the Base Station Auth selection, made from the handset menu function, and exits to process task 1905 which will display Base Station Auth and start the Handset Authorization task 1601. The handset must then be brought into close proximity of the pico station, since the process task is performed at extremely low transmit power levels, with each element requiring very strong signal level to prevent unintentional access to any nearby pico stations.

The consumer must then depress the authorization button on the pico station, which is detected by query task 710 in the Main Loop task 720. A Yes result from query task 710 initiates Handset Authorization task 901. The pico station monitors the button On state in query task 902 and starts the button debounce timer via task 903. Query task 904 monitors to see that the button is still On at the debounce time-out. If the button is Off, a query task 904 No result causes a loop back to query task 902, whereas the button ON test No result will cause task 901 to return to Main Loop 720. Debounce time is set to 500ms to ensure the switch has positive closure before execution of further process tasks.

If the query task 904 outcome is Yes, the pico station performs process task 905 which tunes the pico station transmitter to the known setup/control channel and commences sending the authorization overhead signal stream 3002 via the forward control channel. This overhead stream consists of pico station words 2801, 2802 and 2803. The pico station then starts a ten second authorization timer in process task 906.

Referring now to Figure 16, the execution of Handset Authorization task 1601, causes entry into process task 1602, wherein the handset is tuned to the common/control channel, and a ten second authorization timer is started. Query task 1603 monitors for signal strength in the forward control channel of -60dbm or more. If a pico station signal is not present, query task

1605 monitors for time-out of the ten second authorization timer. If the result of task 1605 is Yes, task 1601 exits to cordless idle at gate 1420. Otherwise, a query task 1605 No result causes a return to query task 1603 to monitor signal strength again.

Once query task 1603 determines sufficient signal strength, query task 1604 monitors for the presence of the pico station authorization overhead stream. A query task 1604 Yes result initiates query task 1605 to test again for timer expiration.

A query task 1604 Yes result initiates process task 1606 which will allow the handset to commence sending its three word authorization stream 3005 consisting of words 2701, 2707 and 2709. Word 2707 local field will contain the I'LL TAKE IT call answer message. This transmission conforms to EIA-553 section 2.6.3.5 protocol for handset reverse control channel messages.

If the pico station query task 907 does not receive a signal from the handset at a level of -60dbm or greater, it will not respond to the transmission. In conjunction with that process, handset query task 1607 monitors the pico station Busy/Idle bit in the forward control channel overhead stream. The handset will cease the transmission upon sending of 104 bits without detecting the forward control channel Busy/Idle bit transition from the pico station. A handset query task 1607 No result passes task 1601 to process task 1624, which will delay the task for a random period >10ms <200ms. Query task 1605 is then initiated which will lead the handset to resend its authorization stream. The handset is programmed to transmit at its power level 7 (approx. 2 mw output) for these transmissions.

The pico station query task 907 monitors the signal level of the handset and if it is not above the minimum then query task 908 monitors for expiration of the 10 second authorization timer. If the timer has not expired, the pico station returns to query task 907 and retests the handset signal level.

Should query task 908 sense that the timer has expired, the pico station performs process task 909 which turns off the transmitter and LED flash state (if On) and then exits back to the Main Loop at 720. The handset will detect loss of signal from the pico station by query task 1603, and expiration of its authorization timer, as detected by query task 1605, which will cause the handset to return to its Cellular Idle task through the Cordless Idle entry gate at 1420.

When query task 907 measures adequate signal strength from the handset, the pico station performs process task 910 during which the pico station captures the handset MIN and ESN data. Query task 911 monitors the captured ESN and MIN against the list of allowed handsets given to the pico station by the service control unit during activation. If the handset was not expected by the pico station, a query task 911 No result initiates process task 909 to terminate the authorization process. A query task 911 Yes result initiates process task 912, which requests and captures the cellular Best Server Information from the handset.

A handset query task 1607 Yes result initiates query task 1608, whereby signal strength of the pico station is monitored for a -60dbm or greater level. If the pico station fails to accept

the handset ESN and MIN, query task 1608 will detect the loss of signal and its No result forces the termination of task 1601 via the cordless idle exit at 1420. A query task 1608 Yes result initiates query task 1609, which monitors for the Best Server command from the pico station. Failure to receive this command will cause task 1601 to loop back to query task 1608 to again monitor signal strength.

When query task 1609 detects the Best Server command, it initiates process task 1610 which causes the handset to send the cellular Best Server information to the pico station.

Task 1610 then initiates query task 1611, which seeks to identify the control filler overhead from the pico station to indicate that a successful link has been established for the Authorization process to continue. A No result at query task 1611 initiates query task 1612 which monitors for sufficient signal level. A Yes result at task 1612 loops back to query task 1611. A No result at 1612 exits through the cordless idle gate 1420.

A pico station process task 912 resulting in capture of the Best Server data, passes task 901 to process task 913, which will send a control filler word stream 2804 on the forward control channel and cause the pico station LED to start flashing. Query task 914 then compares the captured Best Server data against the data list of allowable cellular Best Servers downloaded to the pico station by the service control unit during the Configuration process.

A query task 914 No result initiates process task 909 which will terminate the process if the pico station data fails to match the cellular Best Server data. This condition indicates the pico station location has been changed since it was configured by the service control unit.

Receipt of the control filler word results in a Yes at Query 1611 which initiates process task 1613. The handset will then commence flashing its back-lighted display in response to process task 1613, and upon query task 1611 detection of this initial control filler word stream, to indicate the successful start of Authorization. The handset will then enter its parameter transfer loop. The handset light will continue to flash during the session, as long as the pico station signal remains above the -60dbm level, or until the pico station issues an End Session command at session completion.

A query task 914 Yes result passes control to the pico station parameter transfer loop. This loop is used to transmit to the handset the Parameter Information message 2902, utilizing the Parameter Information message format described in 3001.

The pico station parameter transfer loop begins with process task 915, which starts the cycle timer. Task 901 then initiates process task 916 which formats and transmits the first Parameter Information message, followed by a Control Filler word stream, on the forward control channel . Query task 917 then monitors for an ACK signal from the handset. Should query task 917 result in a No result, query task 918 is initiated to monitor whether the cycle timer is still running. A query task 918 Yes result, initiates process task 916, thereby retransmitting the last message. If query task 918 determines that the cycle timer has elapsed, the resulting No state initiates process task 909 to end the current process.

A query task 917 Yes result initiates query task 919 which monitors for completion of the Parameter Information list. A query task 919 No result initiates process task 915 to pass each remaining parameter. A query task 919 Yes result initiates process task 920 which transmits the End Session command on the forward control channel, resulting in termination of the LED flash, and the process then exits through 720 to the Main Loop.

The handset parameter transfer loop consists of query task 1614, which monitors the pico station signal strength, process task 1615 which captures the Parameter Information message and issues an ACK or NAK reply on the Reverse Control Channel, and query task 1616 which monitors for the End Session command from the pico station. Task 1601 can exit this loop as a result of signal loss detection during query task 1614, which then initiates process task 1622. Process task 1622 turns off the backlight flash and returns the handset to Cellular Idle via the Cordless Idle entry at gate 1420.

When query task 1616 detects the End Session command, task 1601 control initiates query task 1617, which compares this pico station serial number to the numbers of all previously authorized pico stations. A Yes result from query task 1617 initiates process task 1623, which will delete the previously stored information in this pico station slot. Process task 1623 then passes control to process task 1621, which will store the parameter information collected during this authorization interval into the handset EEprom.

A query task 1617 No result initiates query task 1618, which monitors for multiple pico station authorizations for this handset. Each handset is capable of storing information about and communicating with up to three different pico stations. If multiple pico stations are not authorized, a query task 1618 No result initiates process task 1623. A yes response to query task 1618 initiates query task 1619 to determine if the authorized count of pico stations has been previously reached. A query task 1619 Yes result initiates process task 1622 to abort the save process task. A No result from query task 1619 initiates process task 1620, which increments the count of stored pico station data files and initiates process task 1621, to save the file in the EEprom and then return to Cellular Idle via the Cordless Idle entry gate at 1420.

Pico Station Main Loop

Referring back to Figure 7, the pico station exits the Authorization function through the Main Loop gate entry gate at 720. Query task 703 identifies the occurrence of the service control unit activation event and initiates query task 704, which detects the occurrence of the handset Authorization event. A query task 704 Yes result initiates query task 710, which monitors the state of the authorization button. A query task 710 No result initiates query task 711, which monitors the condition of the telephone line connected to the pico station. Should query task 711 determine that the line status has changed, it initiates process task 712, which will then issue update commands to all registered handsets. A query task 711 No result passes control to the Scan Channels task at gate 1001.

The pico station will spend most of its time in the Idle loop, utilizing the telephone line interface to monitor line status and activity, and utilizing the pico station radio to scan all of its assigned channels for handset or service control unit access attempts.

The pico station will exit the pico station Idle loop to transmit:

a. in response to an access attempt from one of its registered handsets;

b. an Update signal to a registered handset of changes in the telephone line status;

c. when signaling a registered handset of an incoming call;

d. when a handset is an active participant in a telephone call;

e. when the Authorization button on the pico station is depressed; and

f. in response to an Undeniable Access Message from the service control unit.

At all other times, the pico station is in a scanning receive mode with its pico station transmitter turned off.

In order to transmit, the pico station must monitor the selected channel for availability. i.e., freedom from transmission of other units. This is accomplished by measurement of Received Signal Strength Indication (RSSI), providing a numerical value that represents the amount of RF energy present at the pico station location on the channel being examined. The pico station has been preset by the service control unit to a Busy Channel RSSI tolerance value above which a channel is to be considered to be in use by monitoring units and therefore is not to be used by the pico station for any transmission.

Handset Registration Process

Both the pico station and the handset operate in a restricted RF coverage environment through control of transmit power and establishment of minimum signals levels for accessing one another.

To consider a channel active for handset access attempts, the pico station has also been preset by the service control unit at an Access Minimum RSSI level below which access attempts shall not be responded to by the pico station. Another purpose of this Access Minimum RSSI in addition to controlling the coverage area of the pico station, is to allow the pico station to identify channels having unacceptable signal levels, and rapidly move to channels where its handsets may be trying to gain access at an acceptable signal level.

The Registration process is initiated by the handset during its Rescan task when the handset location analysis process detects that it is in the coverage area of the Best Server cell site that also covers the pico station. The handset will then periodically attempt to access the pico station by selecting an idle channel from the plurality of channels it was given during the Authorization process task as long as the handset remains within the Best Server coverage area. The duration of this Registration Attempt is sufficiently long to allow the pico station to scan through all the channels and still have time to detect the handset Registration Attempt and respond to the handset.

Referring now to Figures 10, 14, 15, and 17, the Handset Registration process will be described.

The pico station enters the Scan Channels task 1001 and executes process task 1002 which tunes the pico station receiver to the first of the plurality of channels assigned for pico station use. Control is then passed to query task 1003 which monitors the channel for received signal strength above the Access Threshold level assigned to the pico station by the service control unit during configuration. Desirably, this Access Threshold level is set at a level higher than a warning threshold or a drop threshold. Consequently, if a user's handset is granted access, that user will have some margin for moving around without having communication services being automatically dropped.

If insufficient signal level is present, a query task 1003 No result initiates process task 1004 which increments the channel number and tunes the receiver to the new channel. Process task 1004 then initiates query task 1005 which compares the current channel number with the maximum allowed channel number. If the channel number does not yet exceed the maximum number, the query task 1005 No result loops back to query task 1003 to test signal strength on the newly selected channel. If the maximum channel number is exceeded, query task 1005 initiates query task 1013 which monitors the at-home timers for activity.

If no at-home timer is running, a query task 1013 No result initiates process task 1018, which cancels all Handset Registrations with the pico station. Task 1010 then exits back to the Main Loop at entry 720.

The handset performs a pico Idle task in accordance with EIA-553 Rescan standards. This task is entered at 1420 and initiates query task 1418 which monitors to see if the handset is in the Home Idle mode. A query task 1418 No result initiates query task 1401, which monitors for a pico station data fill which was acquired through the Authorization process described above. A query task 1401 Yes result initiates the Handset Registration process at 1701.

The handset enters Handset Registration at 1701 and proceeds to utility task 1515 which tunes the handset to the first of the plurality of channels assigned for pico station use in process task 1516. Query task 1517 is then initiated, which monitors the received signal strength on that channel to determine if its less than the hang-up threshold level provided to the handset during the pico station authorization process described above. This is the RSSI level used by the handset to determine a busy channel. If query task 1517 determines that the signal is not below the minimum, the No result initiates process task 1519 which increments the channel number and tunes the handset to this new channel. Process task 1519 then initiates query task 1520.

Query task 1520 monitors the channel number selected and compares it with the maximum channel number allowed. If the channel number does not exceed the maximum, the query task 1520 No result initiates query task 1517 to test the signal level on the newly selected channel. A query task 1520 Yes result initiates process task 1521 to return a failure

to task 1701. Query task 1702 detects the failure and initiates process task 1707 which starts the find base station timer with a short count value to ensure rapid return to this process task. Control then passes back to the Rescan task at the entry gate 1402.

Once query task 1517 detects an acceptable channel, it initiates process 1518 to return OK. Query task 1702 is satisfied, which initiates process task 1703, which then starts the access timer and causes the handset to commence transmitting the Here I Am1 message words 2701 and 2702 using the 3006 format. Process task 1703 then initiates query task 1704.

Query task 1704 monitors the forward control channel for signal from the pico station above the Access Threshold level. If such a signal is not present, the query task 1704 No result initiates query task 1705 which monitors the access timer running condition. A query task 1705 Yes result initiates query task 1704 to monitor again for signal from the pico station. When query task 1705 detects access timer time-out, the No result initiates process task 1706.

Process task 1706 stops the transmissions from the handset and restarts the find base station timer at its normal value. Task 1706 then returns to the Rescan task via entry at gate 1402.

The pico station query task 1003 will answer Yes when the handset signal is sufficient and then task 1001 control initiates query task 1006 to monitor the received signal for presence of the 10k bit Manchester encoded data. If query task 1006 fails to detect data, the No result initiates process task 1004 to tune to the next channel. The Yes result from 1006 initiates query task 1007, which analyzes the contents of the received data stream to identify a Handset Authorization Registration message.

The Handset Authorization Registration message identified in task 1007 may be either an initial registration, which occurs when a handset first enters the pico system from a standard or macro cellular system, or a reacquisition registration, which occurs when a handset's last registration was with the pico system.

A query task 1007 Yes result initiates process task 1008 which performs the Registration process with the handset, and then exits back to the Main Loop via entry 720. The Registration process may be an extensive registration process which includes security checks for an initial registration. It may be a more abbreviated process for a reacquisition registration. As an example, for a reacquisition task 1008 may simply restart the at-home timer, discussed above in connection with task 1013, associated with the handset. A query task 1007 No result initiates query task 1009.

Query task 1009 monitors the received data message for a service control unit Access request. A query task 1009 Yes initiates process task 1010 which sets the service control unit Access Flag and starts the Base Station Idle task at 1101. A query task 1009 No result initiates query task 1011 which monitors the received data message for a handset Access request. A Yes result from query task 1011 initiates process task 1012 which sets the handset access flag and starts the Base Station Idle task at 1101.

A query task 1011 No result loops back to process task 1004 to increment to the next channel and continue with the scan.

Base station process task 1008 starts an at home timer at the successful completion of the Registration process. This timer is a register holding the value of the time of the event plus 300 seconds. Query task 1013 upon detecting this non-zero timer register, passes its Yes result to query task 1014.

Query task 1014 monitors the current time value against the stored value in each non-zero at home timer register. If the current time equals or exceeds the stored value, a query task 1014 Yes result initiates process task 1015 which cancels the registration of the associated handset(s) for failure to reacquire the pico station within the allowable time window.

However, even though registration is canceled, a handset may reacquire later without going though a full registration process. For example, the handset may have failed to reacquire because it has been powered off. So long as the handset resides within the same pico cell when it is again powered on, it will attempt to reacquire, and the pico base station will accept the reacquisition attempt. On the other hand, if the handset finds itself powered on outside the pico cell, it will then undergo a full registration process the next time it encounters the pico cell.

Control then initiates query task 1016 which monitors to determine if any handsets remain registered. A query task 1016 No result returns to the Main Loop at entry 720. A query task 1016 Yes result initiates process task 1017 which performs an Update Process task for the remaining registered handset(s) to inform them of their status with the pico station. Process task 1017 then starts the Base Station Idle task at 1101.

Base station Idle task 1101 proceeds to query task 1102 which monitors for ring voltage on the house line. A No result at query task 1102 initiates query task 1103 which determines if the service control unit is requesting access for update or audit functions.

A Yes result at 1103 initiates process task 1105 which tunes the base station to the common control channel and ACKs the service control unit access. Process 1105 initiates query task 1106 which analyzes the SCU command for a configuration update. A Yes result at query 1106 passes control to the base station configuration task at 801. A No result to query 1106 initiates query task 1107 which determines if the service control unit command is for an audit purpose.

A No result to query 1107 exits through process task 1111 which terminates the service control unit access and returns to the main loop at 720.

If this was an audit session, a Yes result at query task 1107 initiates process 1108. Process 1108 transfers the requested audit (full or partial) data to the service control unit and initiates query task 1109.

Query task 1109 monitors for a clear traffic register command from the service control unit and a Yes result initiates process task 1110 to reset all traffic registers to zero.

Process task 1110 and the No result to query task 1109 both initiate process task 1111 to terminate the service control unit access session and return to the main loop at 720.

Referring again to Figure 17, Base Station Process task 1008 causes the pico station to transmit its three word Registration Overhead message stream (words 2801, 2802 and 2803) on the forward control channel using format 3002. The handset query task 1704 will detect the presence of signal on the channel and initiate process task 1708 which starts the data acquisition timer. Query task 1709 then monitors the channel for the presence of 10k bit Manchester encoded data. A query task 1709 No result initiates query task 1710 which monitors for data acquisition timer running condition. A query task 1710 Yes result loops back to query task 1709 to monitor for data again. A query task 1710 No output initiates process task 1711 which causes the handset to stop transmitting its Here I Am1 message and start the find base station timer with a short count value to return to this process task quickly.

A query task 1709 Yes result initiates query task 1712 which monitors for the pico station Registration Overhead format message. A query task 1712 No result initiates process task 1717 which terminates the registration attempt, restarts the find base station timer at its normal value, and returns to the Rescan task at entry gate 1402. A query task 1712 Yes result starts the Process Base Overhead task at 1713.

The Process Base Overhead task then initiates query task 1714, which compares the received Digital Color Code in the Registration Overhead message against the stored Digital Color Code for this pico station. If they do not match, the query task 1714 No result initiates process task 1717.

A query task 1714 Yes result initiates query task 1715 which monitors the received System Identity against the stored SID for this pico station. A query task 1715 No result initiates process task 1717. A query task 1715 Yes result initiates query task 1716, which compares the received pico station serial number with the stored serial number for this pico station. A query task 1716 No result initiates process task 1717. A query task 1716 Yes result initiates query task 1718 which monitors the Busy/Idle control bit in the pico station overhead stream for an idle condition. A query task 1718 No result also initiates query task 1719 which monitors the number of consecutive Busy conditions encountered against the maximum allowed count.

If the maximum count is not exceeded, a query task 1719 No result initiates query task 1718 to again test the Busy/Idle bit condition. Should the maximum be exceeded, the query task 1719 Yes result initiates process task 1717 to terminate the registration attempt.

A query task 1718 Yes result initiates process task 1720 which causes the handset to send its 3 word Registration message to the pico station. This message consists of words 2701, 2702 and 2709 sent in the 3005 format. Process task 1720 initiates query task 1721 which monitors for an Acceptance reply from the pico station. The acceptance reply message from the pico station consists of a two word combination of 2805 and either 2808 or 2809, sent in the 3003 format.

Failure to receive acceptance causes a query task 1721 No result to initiate process task 1717 to terminate the registration attempt. A query task 1721 Yes result initiates process task 1722, which captures the Home Handset Unit Number assignment from the pico station. Process task 1722 then initiates process task 1723.

Process task 1723 performs the automatic Call Forward notification function with the cellular switch. This function activates Call Forwarding for any incoming calls directed to this handset MIN. These calls will be forwarded to the pico station telephone number by the cellular switch. Process task 1723 then initiates process task 1724.

Process task 1724 sets the home flag (H-Idle = True), clears the Cellular Idle flag (C-Idle = False), sets the transmit enable flag (XMIT = True) and starts the Reacquire timer. In addition, task 1724 saves the identity of the pico station with which the handset is registered. This identity is saved in non-volatile memory. If this identity is not changed, the handset will attempt to quickly reacquire the pico station after powering on rather than undergoing a more lengthy full registration process, as discussed below. Task 1701 then loops back to the Rescan task at Cordless Idle entry gate 1420.

When a handset initially powers on, it performs a task 1400. Task 1400 initializes the handset. After task 1400, a query task 1427 evaluates the identity of the pico station with which it was last communicating, if any. In the preferred embodiment, the pico cell identity is set to zero when the handset registers with the macro cellular system. A non-zero code identifies a pico station. If task 1427 discovers a pico cell identity of zero, program control proceeds to task 1403 to determine the appropriate macro cellular system from which to seek cellular service.

If task 1427 discovers a non-zero pico cell identity, a task 1428 loads internal data tables which correspond to the identified pico station. Such data tables are loaded with the programming for SID, power levels, activated channel numbers, and the like. After task 1428, program control proceeds to reacquisition gate 1801 to reacquire the identified pico station. By reacquiring the pico station, a full registration process is omitted. By omitting a full registration process, the handset can rapidly be able to communicate with its pico station after being powered on. Thus, a user may have his or her handset powered off but located in one of its authorized pico cells, hear a phone ringing through a land-line system, power on the handset, and quickly be able to answer the phone.

Should the handset fail to locate the pico station, the return to the Rescan task is through entry gate at 1402. Control is passed to query task 1403 which determines the appropriate system from which to seek cellular service. The System Identity assignments are specific to either the non-wireline (A-Side is always Odd) or wireline (B-Side is always Even) service provider.

Query task 1403 monitors the handset's stored SID for even value and the Yes result initiates process task 1404. A query task 1403 No result initiates process task 1405.

Process task 1404 selects the B-Side setup/control channels while process task 1405 selects the A-Side setup/control channels. Both processes initiate task 1406, which scans the selected channels seeking cellular service in accordance with EIA-553 standards. Control then initiates query task 1407 which monitors the result of this search for cellular service availability.

If no service is available, the query task 1407 No result initiates Busy scan entry at gate 1500 which initiates query task 1501. Query task 1501 monitors for a pico station found state, and a No result initiates process task 1502 which starts the find pico station timer. Process task 1502 loops back to Rescan task at gate 1402 to again look for cellular service.

If query task 1407 answers Yes, query task 1408 is initiated to monitor for Home Idle flag = True. This test is part of the Second Line function which enables a registered handset to use the cellular network to complete a call origination when the house line is occupied.

A query task 1408 Yes result indicates that this rescan event is a second line attempt and process task 1409 is initiated to display Premium on the handset.

Process task 1409 starts query task 1423 which examines the overhead global message for a local identity. A Yes result at query task 1423 initiates process task 1424 which replaces the Premium display with the Local display on the screen.

Process task 1424 and the No result at query task 1423 both initiate query task 1410 which monitors the dialed digit buffer for a call to 911. A Yes result at query 1410 exits to the cellular call task at the output number entry 1917.

If query task 1410 determines that this second line attempt was not a call to 911, the No result initiates the dial number entry process at 2000.

A query task 1408 No result initiates query task 1411 which compares the SID of the available cellular system with the stored cellular SID for this handset. If they match, a query task 1411 Yes result initiates query task 1412 which determines if this is the first cycle through this loop, by checking whether the condition of the Cellular Idle Flag = True.

A query task 1412 No result initiates process task 1413 which issues the Call Forward Off command to the cellular switch to transfer calls to this handset MIN back to this handset. Task 1413 additionally saves a pico cell ID of zero in non-volatile memory. Unless this ID value is overwritten in response to a subsequent registration with a pico station, the handset will find a pico cell ID of zero at task 1427 after powering up and refrain from attempting to reacquire a pico station. Process task 1413 then initiates process task 1414 which sets the Cellular Idle Flag = True to ensure that only one cycle occurs through this loop access. Process task 1414 starts the find base station timer and initiates query task 1415. A query task 1412 Yes result or a query task 1411 No result also initiates query task 1415.

Query task 1415 monitors the Best Server identity established during the search for cellular service and compares it with the stored Best Server identities that represent the Best Server for each of the pico stations that this handset is authorized to use.

The Best Server term conveys the identity of the cell site that is providing the strongest signal to the handset from the cellular system. Each cell site is uniquely identifiable by the setup/control channel number it utilizes and the Digital Color Code assigned to its message stream.

Since cellular cell sites provide coverage to a limited area, the handset can restrict its search for one of its pico stations to those instances that the handset is physically within the coverage of the Best Server cell site that is nearest to the pico station location.

It should be recognized that this technique greatly reduces the number of unnecessary transmissions from the handset, and vastly improves the availability of pico station channels for conversations.

Should query task 1415 identify a match of Best Servers, its Yes result initiates query task 1416 which monitors the find base station timer for activity. If the find base station timer is running, a query task 1416 Yes result initiates process task 1417.

Process task 1417 places the word Premium on the handset display to indicate to the user that service is being provided by the cellular system for which an air time charge for usage exists. Process task 1417 then starts query task 1425 which monitors the contents of the overhead data stream issuing from this cell site. Each cell site within the cellular system has a new message appended to its normal overhead stream. This is a local control message in the Global Action Message Format as defined in EIA-553. The 16 bit local field of this message is encoded with the zone identity of this cell site.

Each handset has a table of zone identities that was loaded during the authorization process. Query task 1425 compares the received zone identity to this table and a match will result in a Yes output at query 1425. The Yes result initiates process task 1426 which places the word Local on the display instead of Premium.

Process task 1426 and the No result from query task 1425 both return to the cellular Idle task at 1901.

It should be recognized that the ability to display, on the handset, multiple location sensitive service availability messages greatly enhances the customer's informed decision-making capabilities as to what, if any, costs may incur when placing or receiving calls at a given location.

Query task 1416, upon detecting that the find base station timer has elapsed, will react to the result No to start the Handset Registration task at 1701.

Handset Idle Mode

The home handset unit number is dynamically assigned by the pico station and will change as handsets enter and leave the service area of the pico station.

Upon accepting the registration of a handset, the pico station starts an at-home timer for this unit. The registered handset must then reacquire the pico station before this timer elapses or the pico station will cancel its registration.

Pico station activity in telephone calls, when uninvolved handsets are inhibited from transmitting, will suspend both the pico station's at-home and handset reacquisition timers. Handset response to pico station OHD messages will cause the pico stations to reset their respective at-home timers to a value equal to the time of the event plus 300 seconds.

Each handset also starts its internal reacquisition timer upon acceptance of registration by the pico station. The interval of this timer is set to be 270 seconds, which is 30 seconds less than the pico station's at-home timer.

When the handset's reacquisition timer lapses, the handset will attempt to reacquire the pico station by locating an idle channel and transmitting a Here I Am2 Access Attempt Registration message.

The pico station will respond to this message by repeating the registration sequence described previously.

Each failure of the handset's to reacquire the pico station will increment a counter. If this reacquire failure counter reaches maximum count, the handset is forced to switch to the cellular network and attempt to acquire service there. Each successful reacquisition of the pico station by the handset resets its reacquire failure counter, and restarts its reacquisition timer.

This process is more fully described by referring to Figures 14, 15 and 18.

The flow from the Handset Registration task to the Rescan task at the Cordless Idle entry 1420 proceeds to query task 1418 which monitors the Home Idle flag = True. A Yes result from query task 1418 initiates process task 1419, which places the assigned home unit number on the handset display to indicate to the user that service is being provided by the pico station. Process task 1419 initiates a Monitor Base Station task at entry gate 1503.

The Monitor Base Station task initiates query task 1504 to monitor the reacquire timer for activity. If this timer has not elapsed, a query task 1504 Yes result initiates the Monitor Base Station loop at process task 1506. Process task 1506 then tunes the handset to the initial pico station channel and initiates query task 1507.

Query task 1507 monitors the channel for the presence of signal above the access threshold. If high signal is not present, a query task 1507 No result initiates process task 1511 which increments the selected channel up by one and initiates query task 1512.

Query task 1512 monitors the handset keypad for any activity by the user. If a key is pressed, query task 1512 starts the Cordless Call Origination task at entry gate 2200. If no keypad activity is detected, the query task 1512 No result initiates query task 1513, which compares the selected channel number with the maximum channel number allowed. If the channel selected is greater than the maximum, a query task 1513 Yes result initiates query task 1504 to again test the condition of the reacquire timer. Until then, the query task 1513 No result returns to query task 1507 to monitor the selected channel for the presence of signal from the pico station.

When query task 1507 detects the presence of signal, its Yes result initiates query task 1508 which monitors for the presence of 10K bit Manchester encoded data. If the signal

present is not data, a query task 1508 No result initiates process task 1511 to step to the next channel. If data is present, a query task 1508 Yes result initiates query task 1509.

Query task 1509 examines the data stream for pico station orders directed to this handset, and a Yes response will initiate the Process Base Order task, as defined by EIA-553 standards, at entry gate 2400. A query task 1509 No result initiates query task 1510 which examines the data stream for overhead from the pico station. A Yes response from query task 1510 starts the Process Base overhead task at entry gate 1713.

If the data stream is not the authorized pico station, a query task 1510 No result initiates process task 1511 to check the next channel.

The handset will make a complete pass through all allowed pico station channels on the scan before returning to query task 1504 to test the reacquire timer activity.

The handset will spend most of its pico mode idle time in this scan loop monitoring for pico station activity that may involve this handset.

When the reacquire timer expires, a query task 1504 No result initiates utility task 1515 to find a usable channel as described previously. The utility task Yes result returns to query 1505 which tests for channel found. A No result loops back to query 1504 which restarts the process.

A query task 1505 Yes result starts the Reacquire Pico Station task at 1801 when an idle channel is located.

The Reacquire Base Station task 1801 commences with process task 1802 which starts the access timer to limit the duration of the attempt. Process task 1802 then causes the handset to begin sending the Here I Am2 Registration message stream consisting of words 2701 and 2704 in the 3006 format on the reverse control channel direction of the selected channel.

Process task 1802 initiates query task 1803 which monitors the forward control channel direction on the selected channel for the presence of signal from the pico station above the Access Threshold Level. If the pico station is not responding, a query task 1803 No result initiates query task 1814 which monitors the access timer for activity. Should the access timer expire, a query task 1814 No result initiates process task 1815.

Process task 1815 stops the transmission on the reverse control channel and increments the fail counter. Process task 1815 then loads the Reacquire timer with a small value to ensure rapid return to this task.

Control passes then to query task 1816 which monitors the fail counter for a value equal to the maximum number of failures allowed (three). If the Reacquire pico station task failures reach the maximum count, query task 1816 exits to process task 1817.

Process task 1817 clears the home idle flag, zeroes the reacquire timer and starts the find base station timer. This action effectively cancels the handset from the home condition. Process task 1817 then exits back to the Rescan task at the rescan entry gate 1402.

If the fail counter is not yet at a maximum count, a query task 1816 No result returns control to the Cordless Idle entry of the Rescan task at 1420.

Until query task 1814 detects access timer time-out, its Yes result initiates query task 1803 to continue looking for pico station signal. When 1803 detects the presence of sufficient signal, its Yes result initiates process task 1804.

Process task 1804 starts the data presence timer and initiates query task 1805, which monitors for presence of 10K bit Manchester encoded data. If data is not present, a query task 1805 No result initiates query task 1818 which monitors the data presence timer for activity. If the timer has expired, a query task 1818 No result initiates process task 1815.

While the timer is running, a query task 1818 Yes result initiates query task 1805 to test again for the presence of data. When data is detected by query task 1805, its Yes result initiates query task 1806 to test the data stream for Overhead. If the data message is not Overhead, a query task 1806 No result initiates process task 1815.

A query task 1806 Yes result initiates query task 1807 which compares the received Digital Color Code in the overhead stream with the stored Digital Color Code for this pico station. If the Digital Color Code does not match, a query task 1807 No result initiates process task 1815. If the Digital Color Codes match, query task 1807 Yes result initiates query task 1808.

Query task 1808 compares the received system identity with the stored SID for this pico station. If they don't match, the query task 1808 No result initiates process task 1815. A query task 1808 Yes result initiates query task 1809 which compares the received pico station serial number with the stored serial number for this pico station. The No result from query task 1809 initiates process task 1815. A Yes response from query task 1809 initiates query task 1810.

Query task 1810 monitors the Busy/Idle bit in the forward control channel overhead for Idle. If the Busy/Idle bit is Busy, query task 1810 No initiates query task 1819 which counts the failure and compares the count to the maximum number of failures allowed. If the maximum has been reached, a query task 1819 Yes result initiates process task 1815. The No result from query task 1819 initiates query task 1810 to test the Busy/Idle condition again.

A query task 1810 Yes result initiates process task 1811 which causes the handset to send the three word Registration message to the pico station. This stream consists of words 2701, 2703 and 2709 sent in the 3005 format on the reverse control channel. Process task 1811 initiates query task 1812.

Query task 1812 monitors the pico station response for acceptance of this registration. The pico station response consists of a two word message using word 2805 with either 2808 or 2809 in the 3003 format.

If the pico station fails to accept this handset, a query task 1812 No result initiates process task 1817 to exit home service. A query task 1812 Yes result initiates process task 1813 which performs the internal housekeeping needed to update the handset of the pico

stations status. This process task also clears the fail counters and restarts the reacquire timer . Process task 1813 then exits back to the rescan task at the Cordless Idle entry 1420.

Cellular Idle

While the handset is away from the coverage of the pico cell, it becomes an active cellular handset. Referring to Figure 19, operation of the handset in the cellular idle mode process at 1901 proceeds to query task 1902 which monitors for menu key activity discussed previously.

If the menu key is not pressed, the No result at query task 1902 initiates query task 1906 which tests for phone key activity. A No results to query task 1906 initiates process task 1904 which performs normal cellular idle functions as defined in EIA-553. Process 1904 exits to the rescan task at cordless idle entry gate 1402.

If query task 1906 detects the phone key On, the Yes result initiates query task 1907 which tests for service availability. If service is unavailable, the No result at query task 1907 exits to the rescan task at the cordless idle gate 1420.

If query task 1907 detects service, the yes result initiates the dial number entry task at 2000.

Handset Joining A Call In Progress

The pico station is constantly monitoring the status and condition of the telephone line to which it is connected. Should a call origination occur from one of the household extensions also connected to this telephone line, the following events occur:

a. The pico station will issue an Update message to each of its registered handsets. This Update message Local field will show the line status as In Use (word 2809);

b. Each handset will display Line In Use in place of Home # to inform the user that someone is using the house line.

The pico station will allow any of its registered handsets to join into this call in progress. Referring to Figures 10, 11, 12, 13, 19, 22, and 23, events are described for a handset to join the call.

When the handset user presses the off-hook (green) key in the pico mode, the event is detected by query task 1512 in the Monitor Base Station task which starts the Cordless Call Origination task at entry gate 2200.

The Cordless Call Origination task initiates query task 2201 which monitors for the green key On state. If the answer is No, query task 2201 exits to process task 2202 which handles all other first keystrokes, then returns to the cordless idle task 1420. A query 2201 Yes result initiates query 2203 to determine if the green key occurs in response to a ring event. A query 2203 Yes result initiates the answer call task entry gate 2120. A query task 2203 No result starts the Acquire pico station task at 2210.

The Acquire pico station task 2210 initiates the utility task at 1515 to locate a usable channel. When query task 1515 is completed, it returns to query task 2211.

A task 2211 No result initiates the Reorder task at 1916, which will generate reorder tone to the user to signify the failure to accept a call origination. Task 2211 Yes result initiates process task 2212 which starts the access timer and causes the handset to commence transmitting the I Want In1 Access Request message on the reverse control channel direction of the selected channel. This message consists of words 2701 and 2706 sent in the 3006 format. Process task 2212 then initiates a Contact pico station task at entry gate 2301.

The pico station will detect the handset Access request message in query task 1011 and its Yes result initiates process task 1012, which sets the handset access flag prior to starting the Base Station Idle task at 1101.

Contact Base Station task 2301 initiates query task 2302 to monitor the forward control channel direction of the selected channel for the presence of signal from the pico station above the access threshold level. If high signal is not present, a query task 2302 No result initiates query task 2312 which monitors for activity on the access timer.

The Base Station Idle task proceeds to query task 1102 which monitors for ring voltage on the line. A No result from query task 1102 initiates query task 1103, which monitors for Service Control Unit Access Flag = True. The No result from query task 1103 initiates query task 1104 which monitors for the Handset Access Flag = True. A No response from query task 1104 returns to the Main Loop at entry 720. A Yes response from query task 1104 initiates process task 1112.

Process task 1112 captures the handset ESN/MIN and dialed number if ready. Control then initiates query task 1113 which compares the captured ESN/MIN with the pico station authorized handset data. If query task 1113 answers No, control passes back to the Main Loop at entry 720. A Yes response from query task 1113 initiates Originate or Join Call task at entry gate 1201.

Originate or Join Call task 1201 initiates process task 1202 which performs an Update for all registered handsets, informing of a Handset In Use status, and initiates process task 1203. Process task 1203 issues the appropriate response message to the handset (Acceptance words 2805 and 2808 if line is idle; or Voice Channel Assignment if line is in use). The pico station awaits the handset response in process task 1203.

If the Access timer is running, a query task 2312 Yes result returns to query task 2302 to again check for signal from the pico station. If the query task 2312 response is No, process task 2313 is initiated, which stops the transmission of the Access message from the handset, counts the failure to contact the pico station and places a reduced count value in the reacquire timer. Process task 2313, then initiates query task 2314.

Query task 2314 monitors the dialed digit buffer contents for the presence of a 911 emergency call, as entry into this process was the result of failure to contact the pico station.

If the result is Yes, query task 2314 immediately exits the Acquire pico station task and enters the Rescan task at entry gate 1402 to attempt to locate service from the cellular network to complete this emergency call.

If 911 was not the dialed number, a query task 2314 No result initiates query task 2315 to compare the fail count with the maximum number of failures allowed. If the count is maximum, a query task 2315 Yes result initiates process task 2316, which cancels the handset home condition. This is accomplished by process task 2316 clearing the home idle flag, resetting the reacquire timer to zero and starting the find base station timer. Process task 2316 then returns to the Rescan task at the Rescan entry gate 1402.

If query task 2315 does not detect a maximum fail count, its No result returns to the Rescan task at the Cordless Idle entry gate 1420.

When query task 2302 detects signal from the pico station, its Yes result initiates process task 2303 which starts the data presence timer and initiates query task 2304.

Query task 2304 monitors for the presence of 10K bit Manchester encoded data in the forward control channel direction on the selected channel. If data is not present, a query task 2304 No result initiates query task 2317 which monitors for activity of the data presence timer. A query task 2317 Yes result initiates query task 2304 to test again for data presence. If query task 2317 provides a No result, process task 2313 is initiated to terminate the access attempt.

When query task 2304 detects data presence, query task 2305 is initiated to compare the received Digital Color Code with the stored Digital Color Code for this pico station to detect a match. If the result is No, process task 2313 is initiated to terminate the access attempt. If query task 2305 result is Yes, query task 2306 is initiated.

Query task 2306 examines the pico station response message for a Voice Channel Assignment Order as defined by EIA-553. If query task 2306 results in a No, query task 2318 is initiated, which examines the pico station response message for acceptance in the form of words 2805 and 2808.

A No response from query task 2318 initiates query task 2319, which examines the contents of the dialed digit buffer for the presence of 911. A Yes response from query task 2319 initiates the Rescan task at the Rescan entry 1402 to attempt to locate cellular service to handle the emergency call. If the query task 2319 result is No, the reorder task at 1916 is initiated to inform the user of the inability to handle the call.

A query task 2318 Yes result, or a query task 2306 Yes result initiates process task 2307, which causes the handset to send its two word response message to the pico station as acknowledgment. Query task 2308 is then initiated which monitors for the receipt of a Voice Channel Assignment from the pico station. A query task 2308 No result initiates query task 2321.

Referring now to Figure 12, the pico station process task 1203 captures the handset response and initiates query task 1204, which tests the status of the line for Idle. A No result

at query 1204 occurs when a Join Call function is performed. This causes task 1201 to exit to seize the house line at 1315. A Yes response from query task 1204 initiates query task 1205 which checks to see if the dialed number has been received from the handset. A No response at query task 1205 initiates process task 1208 which starts the dialing entry timer and initiates query task 1209. Query task 1209 monitors for dialed number capture from the handset. A No result from query task 1209 starts query task 1210 which monitors the dialing entry timer for activity.

A query task 1210 No result forces task 1201 to exit through the update handset entry gate 1323. A Yes result from query task 1210 loops back to query task 1209. A Yes result at query 1209 loops back to process task 1203 to issue an ACK. A Yes result from query task 1205 starts process task 1206 to seize the house line. Process task 1206 initiates query task 1207 which monitors the dial out process for success. If the query 1207 result is No, task 1201 exits through the Release Line entry gate at 1322.

Successful dial out will result in a Yes result from query task 1207 which causes task 1201 to initiate the switch to conversation mode process at entry gate 1316.

Query task 2321 monitors the purpose of the access attempt as a capture pico station event with a dialed number ready to pass. A Yes response to query task 2321 initiates process task 2323 which keeps the handset in transmitting state and passes the dialed number to the pico station for processing. Control then passes back to the Origination task at Conversation entry 2204.

If the query task 2321 result is No, process task 2322 is initiated which turns off the handset transmitter and returns to the Origination task at Dial Number Entry 2000 to capture the dialed number from the user.

A query task 2308 Yes result initiates process task 2309 which tunes the handset to the assigned Voice Channel assigned (same physical channel). Query task 2310 is then initiated which monitors the pico station line status received for In-Use. If the result is No, that initiates query task 2321. If the line is in use, a query task 2310 Yes result initiates query task 2311.

Query task 2311 monitors the contents of the dialed digit buffer for a call to 911. A Yes result initiates the Rescan task at the Rescan entry 1402. A query task 2311 result No initiates process task 2320 which keeps the handset transmitter on and returns to the Origination task at Conversation entry 2204.

Origination task conversation entry at 2204 proceeds to query task 2205 which monitors the Transmit Enable Flag = True. A No response to query task 2205 initiates process task 2208 which places the Handset In Use message on the display and returns control to the Rescan task at the cordless busy entry 1422. A Yes results initiates query task 2206.

Query task 2206 determines if the pico station assigned a voice channel for this conversation. A No response to query task 2206 initiates query task 2209 which determines if an emergency call is being placed by the user. A Yes response from query task 2209 loops

back to the Rescan task at the Rescan entry 1402. A No response from query task 2209 exits to the Reorder task at entry 1916 to inform the user of the failure to handle this call.

A query task 2206 Yes result initiates process task 2207, which performs the normal conversation function. Call completion will pass control from process task 2207 back to the Rescan task at the Cordless Idle entry 1420.

Once the conversation is established, pico station process task 1316 initiates the hook-flash monitor loop at query task 1317 which monitors call progress. A query task 1317 Yes result initiates query task 1318, which monitors for a hook-flash from the handset. If query task 1318 response is No, that initiates query task 1319.

Figure 32 shows a flow chart which further illustrates the process followed by the pico station during task 1317. As shown in Figure 32, a query task 3201 determines whether the call has terminated. A call may become terminated when a handset's user presses the On-Hook button, which causes the handset to turn off Supervisory Audio Tone (SAT) and transmit an 1800 ms burst of signaling tone. Alternatively, the far-end of the call may disconnect from the call to return dial tone to the telephone line. If either of these two events causes the call to become terminated, program control exits through the "no" exit of task 1317.

If task 3201 determines that the call has not terminated, a query task 3202 determines whether an interval timer has just expired. The interval timer is a free-running clock operated in a background mode so that it will expire periodically. In the preferred embodiment, the interval timer expires once every 15 seconds. So long as the interval timer has not just expired, program control exits through the "yes" exit of task 1317.

If task 3202 determines that the interval timer has just expired, a task 3203 updates an RSSI running average. In the preferred embodiment, signal strength is averaged over the last four intervals of the interval timer. After task 3203, a query task 3204 evaluates this running average to determine if signal strength has fallen below a drop, Disconnect, or HANGUP threshold. In the preferred embodiments, the drop threshold is programmed (see TABLE 1 above) to be a lower RSSI signal strength than the access threshold level. Thus, when a pico station has granted access to a handset, a user has freedom to move around from the point where access was granted without immediately being warned to do something or immediately being dropped.

If the signal level is above the drop threshold, a task 3205 clears a warning flag, and program control exits through the "yes" exit of task 1317. If task 3204 determines that the signal strength is below the drop threshold, a task 3206 evaluates the warning flag to determine if it is set. If it is not set, program control exits through the "yes" exit of task 1317. However, if it is set, a task 3207 is performed to drop the handset and program control exits through the "no" exit of task 1317.

By dropping the handset, communication services cease to be provided to the handset, and the call terminates. The handset is dropped because its signal level has dropped to a low level that indicates it is at the edge of the pico cell. The drop threshold is programmed to keep

pico cells small to prevent interference with other pico cells that may be nearby. However, the handset will not be dropped unless the handset had been warned in the previous interval. If the handset has not been warned, it will not be dropped, or if any previous warnings occurred in the distant past, the handset will not be dropped.

Referring back to Figure 13, if the query task 1318 response is Yes, that initiates process task 1320 which will transmit the hook-flash from the handset to the telephone central office, and then initiate query task 1319.

Query task 1319 monitors the received signal level from the handset and compares it to the Disconnect Warning Level. A Yes response from query task 1319 initiates process task 1321 which issues a Warning Order to the handset. The Disconnect Warning Level is an RSSI signal strength which is between the Access Level and Drop or Hangup level. In addition, task 1321 sets the above-discussed warning flag so that the handset will be dropped during the next interval if the signal level does not improve, as discussed above in connection with tasks 3204 and 3206. The warning order is issued by sending a warning message to the handset using voice channel control communications which are well known in the cellular telephony art. The handset responds to this warning message by annunciating the warning to the user so that the user may know to take steps to keep from being dropped. For example, the user should generally move closer to the base station. Process task 1321 and a No response from query task 1319 each will initiate query task 1317, to continue monitoring the call for a disconnect event.

When query task 1317 detects a Call Disconnect event, it initiates process task 1322. Process task 1322 then releases the line and initiates process task 1323 which performs an update to all registered handsets informing them of the existing line status and removing the Handset In Use message from their displays. Process task 1323 then returns control to the Main Loop at entry 720.

During this call connection, other household extensions can join or leave the call at will. The pico station will maintain this telephone line to handset connection until one of the following Disconnect events occurs:

a. The pico station fails to detect Supervisory Audio Tone from the handset for 5 seconds;

b. The user presses the On-Hook button which causes the handset to turn off Supervisory Audio tone and transmit a 1800ms burst of signaling tone;

c. The far-end element disconnects from the call and dial tone returns to the telephone line;

d. The average measured RSSI of the handset falls below the Disconnect RSSI level.

Each registered handset may receive a new unit number assignment from the pico station if the cause of call termination was either a. or d. above as both conditions indicate to the pico station that the active handset is no longer in the service area of the pico station.

Figure 33 shows a flow diagram which depicts the tasks performed in normal conversation function 2207. Task 2207 implements a normal conversation function for the cordless mode of operation. A similar conversation function is performed by a task 1915, discussed below, for the macro cellular mode of operation.

The normal conversation function performs a query task 3301 to determine whether a voice channel control communication is being received. The present invention desirably implements voice channel control communications in a manner similar to that described in EIA-553. If no voice channel control communication is being received, then a query task 3302 is performed to determine whether the handset is still Off-Hook. So long as the handset is still Off-Hook, the call continues and program control loops back to task 3301.

When task 3302 determines that the handset is no longer Off-Hook, the handset's user has hung up, and the call now needs to be knocked down. A task 3303 performs a call termination process which is consistent with EIA-553 for the situation where the handset is first party to terminate the call. After task 3303, program control exits normal conversation function 2207 or 1915. The call has been completed.

Referring back to task 3301, when a voice channel control communication is detected, a query task 3304 is performed to determine whether the control communication is a release command. The release command informs the handset that the other party has terminated the call, and a task 3305 then performs a call termination process consistent with EIA-553 for the handset. After task 3305, program control exits normal conversation function 2207 or 1915, and the call has been completed.

When task 3304 determines that the control communication is not a release command, a query task 3306 determines whether the control communication is a warning order, discussed above in connection with task 1321. When a warning order is detected, a query task 3307 is performed to cause program control to wait until supervisory audio tone (SAT) returns. As is conventional with voice channel control communications, SAT is removed while such control communications take place but is restored after the communication is completed. When SAT disappears, the call is muted, but when SAT returns the call may continue. Typically the duration of muting is too brief to be noticed by a user. Program control remains at task 3307 until SAT returns.

When SAT returns, a task 3308 mutes microphone 57 (see Figure 2) so that no audio signals will be transmitted away from the handset. Next, a task 3309 annunciates a distinctive alert to the user. In the preferred embodiment, this annunciation is in the form of an audible signal which is played at the handset's speaker 56 (see Figure 2). In the preferred embodiment, the audible tone is a triple beep having approximately 50 ms of on time and 50 ms of off time. An audible rather than visual annunciation is used because the user typically has the handset at his or her ear when the warning order is received and would not necessarily be aware of a visual annunciation. Since the microphone has been muted, the warning alert is not heard by the other party to the conversation, and the flow of the conversation is less likely to be

disrupted. After task 3309, a task 3310 enables the microphone so that so that audio will henceforth be transmitted to the other party in the call. After task 3310, program control loops back to task 3301, and the call continues. As discussed above, the handset's user has a predetermined interval, equal to 15 seconds in the preferred embodiment, within which to strengthen the signal received at the pico station. Typically, the user needs to move toward the base station to accomplish this.

Referring back to task 3306, when a control communication is received that is something other than a release or warning order, the handset may perform any number of tasks to parse the control communication and then perform a task 3311 to appropriately respond to the other control communication. Typically, such other control communications are not received while operating in the cordless mode designated as task 2207. However, while operating in the macro cellular mode, as designated by task 1915, the handset may receive power control commands, handoff commands, and the like. After responding in task 3311, program control loops back to task 3301, and the call continues.

Base Station-Handset Call Origination Process

While the pico station is in Idle mode, with the telephone line connected but not in use, any one of the registered handsets can originate a telephone call.

Conventional cellular handset dialing procedures differ dramatically from normal PSTN dialing procedures. A benefit of the present invention derives from restoring the normal PSTN dialing procedure to the handset of the system in both the pico and cellular modes of operation.

This has been accomplished by having the handset generate internal precision dial tone; removing dial tone on entry of first dialed digit; analyzing the number entry against the North American Numbering Plan; and automatically releasing the number to the network upon detection of a complete entry. Cellular customers acclimate rapidly to this system as it does not force them to learn new procedures.

Referring to Figures 19, 20, 21, the handset Call Origination process will be described.

When the handset user presses the Off-Hook (green) key, events will follow the process flow path previously described for handset joining a call in progress up to Dial Number Entry at 2000.

Dial Number Entry task at 2000 initiates query task 2001 to determine if this is a pico mode or cellular connection by monitoring the Home Idle Flag = True condition. A No result from query task 2001 initiates process task 2005. A Yes result from query task 2001 starts query task 2003 which monitors for Transmit Flag = True. The No result from task 2003 initiates process task 2004 which places the Handset In Use message on the display and returns to the Rescan task at the Cordless Busy entry 1422.

Cordless Busy Entry 1422 initiates query task 1421 as part of the second line option process. Query task 1421 monitors for the green off-hook key press and a Yes result will loop

back to the Rescan task at query 1403 as previously described. A No result at query task 1421 starts the monitor base station at entry 1503.

If the transmission flag was true, a Yes result at query task 2003 initiates process task 2005 to clear the digit collection buffer, reset the digit counter to zero and to set the maximum expected digit count at seven. Control then passes from 2005 to process task 2006.

Process task 2006 turns on the internal precision dial tone generator to indicate to the user that a call may be placed. Process task 2006 then initiates query task 2008 at the Digit Capture entry gate 2007. Query task 2008 monitors for any key being depressed.

A query task 2008 No result initiates query task 2009 which monitors for service available, by examining the signal being transmitted by the pico station on the selected channel and comparing its level to the disconnect level if H-Idle is true, or checking for macro cellular service if C-Idle is true. If query task 2009 fails to identify presence of service, its No result initiates process task 2013, which removes the dial tone and exits back to the Cordless Idle task at entry gate 1420.

With service available, a query task 2009 Yes result initiates query task 2021 which tests the Home Idle = True Conditions. A No result from query 2021 initiates query task 2011. A Yes result from query 2021 starts query task 2010 which monitors the Transmit = True flag. If the query 2010 result is No, the Dial Number Entry task exits through the busy exit gate at 2021. A Yes result from query task 2010 also starts query task 2011 which checks the entry timer activity.

A query task 2011 No result indicates that the user has failed to make an expected entry. This starts query task 2012 which monitors for digit buffer empty state. If some number of digits have been collected, a query task 2012 No result initiates the Speed Dial task at entry gate 1908.

An empty buffer allows query task 2012 Yes to pass control back to the digit collection loop at the process task 2005 which restarts the process. A query task 2011 Yes result initiates task 2008.

When task 2008 detects a key press, the Yes result initiates query task 2014 which tests the Home Idle = True Condition. A No result from 2014 initiates query task 2016. A Yes result from query task 2014 starts query task 2015, which checks whether a second Off-Hook (green) key was pressed within two seconds of the initial Off-Hook that started the call. That procedure is used by the handset to bypass the pico station pico mode. This is the second line function which allows the user to force his call origination to the cellular system. One reason for making this choice would be a Line Busy condition on the house line with an important call to make. Yes response from query task 2015, causing exit from the Origination task and entry of the Rescan task at gate entry 1402.

A No response from query task 2015 initiates query task 2016 which examines the key pressed to see if the key was numeric. A No response from query task 2016 initiates the Non-Numeric Entry task at entry gate 2102. The Non-Numeric Entry task at 2102 proceeds to

query task 2109 which monitors for a Clear key press. If the task 2109 response is Yes, that initiates query task 2110 which checks the digit buffer for empty condition. If the buffer is empty, a query task 2110 Yes result initiates the Dial Number entry task at the beginning entry 2000. This action leaves the dial tone on.

If the dial digit buffer is not empty, a query task 2110 No response initiates process task 2111 which deletes the last digit entry from the digit buffer and reduces the digit counter by one. Control is then passed to query task 2112 to check the digit buffer for empty condition after this removal. A No response from task 2112 initiates the digit collection loop at the Digit Capture entry 2007. Should task 2112 find the digit buffer empty, its Yes result will restart the Dial Number Entry task at 2000, which will then restore the dial tone to the user.

If query task 2109 response is No, that initiates query task 2113 which monitors the first key pressed for the (#) key. That key acts as the handset Redial Last Number key. A Yes response from query task 2113 initiates process task 2114 which retrieves the Last Number Called and places it into the digit buffer. Process task 2114 initiates query task 2115 which monitors the digit buffer for empty.

If the query task 2115 response is Yes, that causes a loop back to the start of the Dial Number entry task at 2000. If the query task 2114 response is No, that initiates process task 2116 which removes the dial tone and initiates the Dial Complete task at entry gate 2020.

If the first entry was not a (#) key, a No response at query 2113 initiates query task 2118 which monitors the first key pressed for the (*) key. A Yes response from 2118 initiates process task 2119 which removes dial tone and initiates the process task 2120. Process task 2120 saves the (*) in the digit buffer and initiates process task 2107 which starts the Interdigit timer running. Process task 2107 returns control to the digit collection loop at the digit capture entry gate 2007.

If the first entry was not an (*), a No response from query task 2118 initiates process task 2121 which generates a burst of Error Tone to the user and then initiates process task 2107 to start the interdigit timer.

Referring back to Figure 20, if the key pressed was numeric, a query task 2016 Yes result initiates process task 2017, which saves the digit in the digit buffer, and increments the digit counter by one. Control then passes from task 2017 to query task 2018 which compares the digit counter output against the maximum digit count. A Yes response from query task 2018 initiates query task 2019 which will direct the originate task to the appropriate service by monitoring the Home Idle = True condition. A No result from query task 2019 passes control to the output number task at entry gate 1917 and the call will be handled on the cellular network.

A Yes result at query task 2019 initiates the Capture Base Station task at 2213.

If all expected digits have not yet been entered, a No response from query task 2018 initiates the Numeric Entry task at 2101 of Figure 21. The Numeric Entry task proceeds to

query task 2103 which monitors for the first dialed digit. A Yes response from query task 2103 initiates process task 2104 which removes the dial tone signal and then initiates query task 2105, which monitors this first digit for either a 1 or a 0 indicating a toll call is being placed. A task 2105 Yes response initiates process task 2106 which resets the digit count maximum value to 11. A No result at query 2103 and a No result from task 2105 each initiate query task 2108.

Query task 2108 compares the accumulated digits in the digit buffer with the North American Dialing Plan to detect a dial complete status. A Yes response from query task 2108 initiates the Dial Complete task at 2020. A task 2108 No response initiates process task 2107 which restarts the interdigit timer.

This unique dialing plan for the handset which utilizes a digit counter process task, interdigit timer process task and comparison to the NANP standards coupled with internal precision dial tone generation enables the user to rapidly enter the desired dialed number. This, in turn, brings to cellular and other special handset usage the advantages of dial tone and the ease of familiar dialing protocol, without send and end button function.

Speed dialing is also internally supported by the handset through interdigit time-out with a non-empty digit buffer by control passing to the Speed Dial entry at gate 1908 from query task 2012 in Digit Capture task 2007. Control proceeds to query task 1909 which monitors the digit counter for a value less than or equal to three which allows for up to 200 speed dial storage registers. A No response from query task 1909 initiates the Dial Complete task entry at 2020. A Yes response from query task 1909 initiates query task 1910.

Query task 1910 monitors whether the value in the digit buffer falls between 1 and 199 speed dial register values. A No response from query task 1910 initiates Dial Complete task entry at 2020, while a Yes response initiates process task 1911 to recall the contents stored at the selected memory location, and places them into the digit buffer. Process task 1911 then initiates query task 1912.

Query task 1912 monitors the digit buffer for empty condition. A Yes response to task 1912 will cause return to the start of Dial Number Entry task 2000. A No response from query task 1912 initiates the Dial Complete task entry at gate 2020, to place the call.

Dial Complete task at 2020 proceeds to query task 2019 to determine routing as described previously.

The cellular origination process of Output Number at entry gate 1917 initiates process task 1913 which originates a call to the cellular network with the accumulated number as the destination address. Process task 1913 then initiates query task 1914 at the cellular conversation entry point 1918.

Query task 1914 monitors for receipt for a voice channel assignment from the cellular switch. Should the call fail to complete, a No result from query task 1914 initiates process task 1916 which generates a reorder tone to alert the user that the call did not go through.

Control then passes from process task 1916 back to the Rescan task at the idle entry gate 1420.

If the query task 1914 result is Yes, control passes to the normal cellular conversation function at task 1915. Upon call completion, process task 1915 returns control to the Rescan task at the Cordless Idle entry gate 1420. Normal cellular conversation function task 1915 is described in more detail above in connection with Figure 33.

The Capture pico station entry at 2213 of Figure 22 initiates process task 2214 which turns on the handset transmitter and begins sending the I Want In2 Access Demand message to the pico station on the selected channel. Control then passes from process task 2214 to the contact pico station task 2301 discussed above.

Referring again to Figure 12, the pico station detects the Access Demand message and captures the dialed number from the handset. As previously described, process task 1203 issues the Voice Channel response and captures the handset acknowledgment. Process task 1203 initiates query task 1204, which monitors the house line Idle state.

A Yes response from query task 1204 initiates query task 1205 which monitors for dialed number capture. A Yes response from task 1205 initiates process task 1206. Process task 1206 seizes the house line and initiates query task 1207 which detects dial tone and outdials the number captured from the handset into the network. Failure to complete the dialing process task initiates process task 1322 to terminate the call.

Successful completion of query task 1207 initiates the Switch to Conversation process task at 1316 which will switch to the conversation mode as described in EIA-553 standards. Control passes to the hook flash monitor loop as previously described.

During this call connection process, other household extensions can join or leave the call at will. The pico station will maintain this telephone line to handset connection until one of the disconnect events occurs.

Each of the registered handsets may receive a new unit number assignment from the pico station if the call termination occurred since the active handset was no longer present in the service area of the pico station.

Base Station Handset Call Termination Process

While in the pico station Idle task, the telephone line interface will alert the pico station to an incoming call by detecting the presence of ring voltage on the line. The pico station then immediately initiates the Call Termination process.

Referring to Figures 9, 11, 13, and 24 the Call Termination process will be described.

As described previously, the pico station Scan Channels task will start the Base Station Idle task at entry 901 after processing active at-home timers. The pico station is not involved in call activities unless a handset is Home.

The Base Station Idle task proceeds from entry 1101 to query task 1102 which monitors for ring voltage on the house line. A Yes response from query task 1102 initiates the Terminating Call process at 1300.

Control passes to process task 1301 which starts the ring return timer with an interval of five seconds. The North American Telephone System utilizes a ring cycle of two seconds On and four seconds Off.

Process task 1301 initiates process task 1302 which locates an Idle pico station channel and issues a Page Order to each authorized handset. This activity includes the collection of responses from the handsets to the Page Order. This process task follows the EIA-553 standard for message configurations.

The handset Monitor Base Station task will detect the pico station Page Order during query task 1509, and will start the Process Base Order task at 2401. The Process Base Order task entry at 2401 initiates query task 2402 which compares the type of order with Page Order. A Yes response from query task 2402 initiates query task 2403.

Query task 2403 monitors the pico station Busy/Idle bit for Idle. A No response from query task 2403 initiates query task 2405, which counts the failures and compares the fail count to the maximum fail count allowed. A Yes response from task 2405 causes exit of the Process Base Order task and initiates the Rescan task at Cordless Idle entry 1420.

A No response from query task 2405 initiates query task 2403 to again test the Busy/Idle bit state. A Yes response from query task 2403 initiates process task 2404 which issues an Acknowledge signal to the pico station. Process task 2404 then initiates the Rescan task at Cordless Idle entry 1420.

Base station process task 1302 then initiates query task 1303 which monitors for any responses from the paged handsets. A No answer from query task 1303 loops back to Base Station Idle task at 1101 which then initiates the process task again. A Yes response from query task 1303 initiates process task 1304.

Process task 1304 will issue an Alert On Order to each of the handsets that ACK'D the Page Order.

The handset will capture the order in the Monitor Base Station task at query task 1509 and restart the Process Base Order task at entry 2400. Again, control initiates query task 2402 which monitors for a Page Order. The No response from query task 2402 initiates query task 2406 which monitors for the Alert Orders. A Yes response from query task 2406 initiates query task 2407, which monitors for Alert On Order. A Yes response from query task 2407 initiates process task 2408 which activates the internal ringer in the handset to alert the user of the incoming call. Process task 2408 then initiates the Rescan task at cordless idle entry 1420.

The pico station process task 1304 then initiates query task 1305, which monitors for answer from a household extension. A Yes response from query task 1305 initiates process task 1311 which issues a Release Order to each handset that was alerted.

Process task 1311 then issues an Update Order to inform the handsets of the Line In Use status. Control then returns to Base Station Idle task at entry 1101.

A No response from query task 1305 initiates query task 1306 which monitors for answer from a handset. The No result from query task 1306 initiates query task 1307 whereby

the line Ring condition is again tested. A Yes response to query task 1307 initiates process task 1308 which restarts the Ring Return timer for another five second interval. Process task 1308 and a No result from query task 1307, each initiate query task 1309.

Query task 1309 monitors for Acknowledge receipt from all handsets. A No response to query task 1309 initiates process task 1312 which issues a Page Order to each of the non-responding handsets. Process task 1312 initiates process task 1313 which issues an Alert On Order to each of the responding handsets. Process task 1313 and the Yes result from query task 1309 each initiate query task 1310.

Query task 1310 monitors the ring return timer for activity. If the timer has expired, the system determines that the caller has hung-up. Consequently, a Yes response to query task 1310 initiates task 1311 to terminate the call. A No response from query task 1310 loops back to query task 1305 to test for answer from the house extensions again.

Referring now to Figure 24, the Process Base Order query task 2406 No result initiates query task 2410, which monitors for a Release Order from the pico station. A Yes response to query task 2410 initiates process task 2411 which turns off the alert ringer, returns the disconnect response and initiates the Rescan task at Cordless Idle entry 1420.

A No response from query task 2410 initiates query task 2412 which monitors for Update Order from the pico station. A Yes response from query task 2412 initiates process task 2413 which captures the new status and initiates query task 2414. A No result from query task 2412 loops back to the Rescan task at the Cordless Idle entry 1420.

Query task 2414 monitors the Busy/Idle state of the pico station for Idle. A No response from query task 2414 initiates query task 2421 which counts the failure and compares the accumulated count against the maximum failure count allowed. A Yes result from query task 2421 loops back to the Rescan task at Cordless Idle entry 1420. A No response from query task 2421 loops back to query task 2414 to again test the Busy/Idle state.

A Yes result at query task 2414 initiates process task 2415 which acknowledges the update and initiates query task 2416. Query task 2416 monitors the Update Order for a Handset In Use message. A No result at query task 2416 initiates query task 2422. Task 2422 monitors the Update Order for a Line In-Use message. A No result at query task 2422 initiates query task 2423. Task 2423 monitors the Update Order for an Idle message. A No response to query task 2423 loops back to the Rescan task at Cordless Idle entry 1420.

When the user wishes to answer an incoming call the Off-Hook key is pressed. This action is detected by the Monitor pico station function of query task 1512 and the No result starts the Call Origination task at entry 2200.

As previously explained, origination task entry 2200 initiates query task 2201 which monitors for the Off-Hook (green) key pressed condition. A Yes response to query task 2201 initiates query task 2203 which monitors for Alert Ringer On state. A Yes response from query task 2203 starts the Answer Call task at entry 2122.

Referring now to Figure 21, the Answer Call task entry 2122 initiates query task 2123 which monitors the Busy/Idle state of the pico station. A No response from query task 2123 initiates query task 2129 which counts the failure and compares the accumulated count to the maximum allowed failure count. A Yes result from query task 2129 returns to the Rescan task at Cordless Idle entry 1420. A No response from query task 2129 initiates query task 2123 to again test the Busy/Idle state.

A Yes response from query task 2123 initiates process task 2124 which sends the I'll Take It message to the pico station. Process task 2124 initiates query task 2125 which monitors for an acknowledge from the pico station.

Referring now to Figure 13, the pico station detects the answer from the handset in query task 1306 which initiates process task 1314. Process task 1314 issues an Alert Off Order to all other handsets, acknowledges the I'll Take It message from the answering handset and issues an Update Order to all other handsets. The update order is a message that instructs the handsets to display "Handset In Use," or the equivalent. In this mode, all other handsets are denied services through the pico system. However, communication services may still be available through the macro cellular system. Process task 1314 then initiates process task 1315 which seizes the line to answer the call and initiates process task 1316 to commence the conversation via a process which has been described previously.

Referring back to Figure 24, the Alert Off Order is captured by the handsets in query task 2407 which then initiates process task 2409 to turn off the alert ringer. Process task 2409 initiates the Rescan task at Cordless Idle entry 1420.

The answering handset remains in a tight loop at query task 2125 of Figure 21, awaiting pico station ACK. A No result from query task 2125 initiates query task 2126 which monitors for an Update Order directed to this handset. Should another handset contend for answer and succeed, a yes response from query task 2126 will initiate the Process Base Order task at entry 2401.

A No response from query task 2126 initiates query task 2127 which monitors the pico station signal strength for greater than the disconnect level. A Yes response from query task 2127 closes the loop and initiates query task 2125 awaiting the pico station ACK. A loss of pico station signal will force a No response from query task 2127 and initiate process task 2128, which clears the display and cancels the alert ringer. Process task 2128 loops back to the Rescan task at the Rescan entry 1402.

Receipt of the pico station ACK at query task 2125 initiates the Origination task at the Cordless Conversation entry 2204 previously described.

Each non-answering handset receives an Update Order. Referring now to Figure 24, the Process Base Order query task 2416 detects the status as Handset In Use and the Yes result from query task 2416 initiates process task 2417. Process task 2417 places the Handset In Use message on the display and initiates query task 2418 which monitors for a new command from the pico station. Likewise, a Yes response from query task 2422 initiates a

process task 2424, which places the Line In Use message on the display. A Yes response from query task 2423 initiates a process task 2425 which places the Idle message on the display. After either of tasks 2424 or 2425, program control proceeds to task 2418 to monitor for a new command from the pico station.

The No result from query task 2418 initiates query task 2419 which monitors whether the pico station signal strength is above the disconnect level. A Yes response from query task 2419 loops back to query task 2418 to test for a pico station order. All handsets will stay on this channel for the duration of the active handset's involvement in the call.

Should a handset from query task 2419 lose signal from the pico station the No result initiates process task 2420 which clears the display and returns control to the Rescan task at entry 1402.

Receipt of a new order from the pico station will force a Yes response from query task 2418 which initiates the Process Base Order task at entry 2401.

This sequence completes the call process flows for the handset and pico station.

Alternate Line Option Module

The alternate line option module consists of a modified cellular telephone housed in an exterior mountable enclosure powered from an ac source with internal battery backup. The modifications to this cellular telephone unit include the addition of a switchable PSTN telephone line interface, additions to permit Remote Programming System compatibility, and other custom operating software.

The purpose of the alternate line option is to provide flexible access provisions for call traffic allocation. This function can be limited to the Inter-exchange carrier (IXC) or can extend to the local exchange carrier (LEC) as well. The function is referred to as competitive access provision herein.

The alternate line option is an independent device in that it can be deployed with or without a pico station or dual mode handsets. The alternate line option acts as an rf link to the customer site, which provides alternative access to the PSTN by means of the local cellular carrier.

The alternate line option module operates under the control of the local cellular carrier. It monitors the calls originated from the house and selectively routes calls to the cellular system for completion. The alternate line option also monitors the macro cellular network and is capable of routing calls placed to the alternate line option's MIN onto the house wiring for completion. The selection process, line substitution function and mode of operation are downloaded to the alternate line option from the cellular carrier via the remote programming capability previously described. The use of the remote programming line ensures positive control of the alternate line option module by the cellular carrier.

In the embodiment illustrated, the PSTN central office line to the house terminates at the input of a standard network interface device (NID) provided by the local exchange carrier.

The output of the interface module connects to the house wiring. The house wiring connects all of the customer's telephone equipment (extensions, FAX machines, computer modems, cordless telephones, etc.) to the central office line. The alternate line option module is installed by connecting its input to the output of the NID. The house wiring is then connected to the output of the alternate line module. This places the alternate line option in series with the house wiring.

This method of interconnection allows the alternate line option module to become a central office substitute during those periods when the alternate line option is actively providing the competitive access to the household from the cellular carrier.

Referring now to Figure 25, the initialization functions and remote programming operation of the alternate line option module will be described.

Upon application of power, task 2501 is started which will perform internal housekeeping chores to place the telephone line interface and the cellular radio unit into their idle modes. The alternate line option module is designed to ensure that its line interface and radio unit fail (fault or loss of power) in an On-Hook state and transmitter off condition, respectively.

Task 2501 passes control to process task 2502 which will upload the contents of the non-volatile memory to determine operational status. Process task 2502 then initiates query task 2503 which tests for a programmed MIN.

If the MIN is not yet programmed, the alternate line option module will attempt to place a cellular call to the host at a factory programmed 1-800 number until contact with the host is established.

This attempt will be made on the strongest cellular carrier access channel serving the alternate line option module initially (A-side or B-side). If the call is not accepted by the carrier for completion, the alternate line option module will switch sides and attempt the call again. If the host is busy and cannot process the alternate line option call, the alternate line option module will retry at five minute intervals until connection is established.

A No result from query task 2503 initiates to process task 2509 which will start the status led flashing red as an indication that the alternate line option is inoperative. Process task 2509 then selects the B-Side system and initiates control to query task 2510 which monitors available cellular service.

A Yes result from query task 2510 initiates process task 2512 which originates a call to the 1-800 number assigned to the host. Query task 2513 is then initiated to determine if the call was accepted by the selected system. The cellular carrier deploying the alternate line option module will program his switch to accept calls to the remote programming number without requiring the calling unit to have a valid MIN. If the query task 2513 result is No, or with a No result from query task 2510, process task 2511 is initiated which forces the alternate line option module to switch to the other cellular system.

Process task 2511 then loops back to query task 2510 to test for available service again. A Yes result from query task 2513 starts query task 2514 which determines if the host accepted the call from the alternate line option module.

If the host failed to answer, a query task 2514 No initiates process task 2534 which enters a five minute delay before looping back to query task 2510 to attempt again to contact the host.

A Yes result from query task 2514 initiates process task 2515 which obtains a download from the host that contains the alternate line option's MIN, SID, current date/time setting for the Real-Time clock, host Check-in date/time window and Mode of Operation Parameters.

The Mode of Operation Parameters for the alternate line option module include the local exchange alternative (LEC bypass) directives and inter-exchange alternative (IXC bypass) directives. These parameters are stored in the central processing non-volatile memory.

Process task 2515 then connects to query task 2516 which monitors for a completed host download. If the download process failed, the query task 2516 No result will initiate process task 2534, to perform a delay and try again.

A Yes result at query task 2516 starts process task 2517 which restores the status LED to a steady green condition to indicate the alternate line option module is now programmed and operational.

The status LED is provided as a service tool to aid in malfunction diagnostics should the need arise.

Process task 2517 exits to the primary service loop of the alternate line option, the Check Window entry at 2505.

At any power on reset event which follows the remote programming system download, a Yes result from query task 2503 will initiate query task 2504 which tests whether the internal real time clock is functioning normally. A Yes result at query task 2504 exits to the primary service loop entry Check Window at 2505.

A No result from query task 2504 initiates an immediate process to contact remote programming system for the correct Time of Day. This is accomplished by starting query task 2524 which tests for cellular service availability. If service is available, the Yes result from query task 2524 starts process task 2525 which originates a call to the host. Process task 2525 initiates query task 2526 which monitors the answer from the host. A No result from query task 2526 initiates process task 2529 which creates a one minute delay and then loops back to process task 2525 to try again.

An answer from the host provides a Yes result from query task 2526, which starts process task 2527. Process task 2527 obtains a real time clock update from the remote programming system. Control then passes to query task 2528 to determine load success. A No result at query task 2528 loops back to process task 2529. A Yes result to query task 2528 exits to the primary service loop at 2505, the Check Window entry.

Should query task 2524 determine that no service was available, its No result initiates process task 2535 which will light the status LED a steady red, and log the alarm condition into the non-volatile memory to allow reporting the event to remote programming system. Process task 2535 then starts query task 2536 which will continue to monitor for cellular service availability.

Query task 2536 remains in a tight loop if service is not available by having its No result loop back to the start of query task 2536. A Yes result from query task 2536 initiates process task 2537 which restores the status led to a steady green and loops back to process task 2525 to attempt to contact the host.

The Check Window task entry at 2505, as previously described in several process steps, initiates query task 2506 which follows standard cellular protocol, to determine if cellular service is available at the alternate line option location which matches the SID of the cellular carrier downloaded from the host.

A No result from query task 2506 connects to process task 2530 which lights the status led a steady red to indicate the alarm condition and logs the event into the non-volatile memory to report it later to the host. Process task 2530 initiates query task 2531 which remains in a tight loop monitoring for service availability. A query task 2531 No result loops back to the start of query task 2531. Once service is available, the Yes result from query task 2531 starts process task 2532 which restores the status LED to a steady green state and returns to the Check Window task entry at 2505.

With service available, a Yes output to query task 2506 initiates query task 2507. The alternate line option module maintains a real-time clock and calendar to determine when its operating window is enabled and when it should contact the host for possible update to its operating parameters. Query task 2507 tests the current date/time against the stored remote programming call in window. If the call-in window is open, the Yes result to query task 2507 starts query task 2533.

Query task 2533 determines the delay timer activity, and a No result to query task 2533 initiates query task 2518 which monitors for service availability. A No result from query task 2518 loops back to the Check Window entry at 2505.

A Yes result to query task 2518 starts process task 2519 which originates a call to the host. Process task 2519 initiates query task 2520 which tests for an answer from the host. Should query task 2520 fail to determine Remote programming system answer, a No exit will start process task 2523 which starts the delay timer with a 30 second time-out value. Process task 2523 then loops back to the Check Window entry at 2505.

If the answer from the host produces a Yes result at query task 2520, it starts process task 2521 to obtain an update from the host. Process task 2521 initiates query task 2522 to determine successful completion of the update.

A No result from query task 2522 initiates the delay timer process task at 2523 while a Yes result loops back to the Check Window entry at 2505.

If the host call in window is closed, the query task 2507 No result initiates query task 2508. A Yes result to query task 2533 also initiates query task 2508. Query task 2508 compares the current date/time against the value downloaded from the remote programming system to determine if the alternate line option module service window is open. The existence of this service window allows the cellular carrier to exercise traffic management during periods when the cellular system may have limited capacity to handle household call traffic.

If query task 2508 determines the service window to be closed, the No result loops back to the Check Window entry at 2505. If the service window is open, the Yes result to query task 2508 starts the alternate line option On Line task at entry gate 2601.

Therefore, when the service window is closed or the alternate line option is not receiving service from the cellular system, the alternate line option module will ignore all line activity in the household.

Referring now to Figure 26, the alternate line option service functions will be described in more detail. When the operating window is enabled, and the alternate line option radio unit is receiving service from the cellular system. The alternate line option On Line task is entered at 2601 which initiates query task 2602 to monitor the line current to determine Off-Hook indication. A Yes result to query task 2602 initiates query task 2603 which tests the real time clock for the start of a new minute.

To ensure coverage of all time sensitive events, query task 2603 will exit the alternate line option On Line task and return to the Check Window entry at 2505 on the start of each new minute if the alternate line option On Line task should discover the line to be in use at the start of its service window. A No result at query task 2603 loops back to the start of query task 2602 to continue monitoring the line status.

When the line is Idle, the No result to query task 2602 initiates query task 2604 which monitors the alternate line option configuration data to determine local exchange company bypass mode activity. A Yes result to query task 2604 starts process task 2605 which activates the line transfer mechanism.

Process task 2605 acts to disconnect the house wiring from the central office and substitutes the alternate line option module functions for all central office functions. Process task 2605 and the No result from query task 2604 both start query task 2606.

Query task 2606 monitors the house line to determine if an extension is Off-Hook. A Yes result to query task 2606 starts query task 2622 which monitors for the LEC bypass mode. A Yes result to query task 2622 initiates process task 2623 to generate precision dial tone to the house line.

Process task 2623 and the No result to query task 2622 start process task 2624 which captures the first dialed digit and passes control to query task 2625.

Query 2625 determines LEC bypass mode activity and a Yes result initiates process task 2626 to remove the dial tone signal. Process task 2626 and the No result from query task

2625 initiate query task 2627 which determines if this first digit is either a one or zero. Either case results in an access review.

Should query task 2627 produce a No result, query task 2628 is started which monitors for LEC bypass mode activity. If the alternate line option is in the IXC bypass mode, a No result from query task 2628 initiates process task 2629 which captures the dialed exchange code (first three digits). Process Task 2629 then initiates query task 2630 which determines if this exchange code (NNX) is a member of the list of exchanges to be diverted to the cellular carrier for completion. A No result at query task 2630 returns to the Check Window entry gate 2505.

A Yes result at query task 2630 and the Yes result at query task 2628 start process task 2631 which captures the complete dialed number. Process task 2631 then initiates query task 2632 which tests for LEC bypass mode. A No result to query task 2632 starts process task 2633 which seizes the line away from the central office and effectively drops the call to the PSTN. The house connection is now to the alternate line option module output interface which keeps the line supplied with -48vdc talk battery. Process task 2633 and a Yes result to query task 2632 initiate process task 2634 which originates a cellular call to the collected dialed number.

Process task 2634 connects the house line audio circuit so the caller can hear the line supervision provided in response to this call origination. Process task 2634 then starts query task 2635 which monitors the call event for activity. Control remains at query task 2635 until a call disconnect event, by looping the query task 2635 Yes result back to the start of query task 2635. Occurrence of a disconnect event produces a No result to query task 2635 which initiates process task 2636.

Process task 2636 drops the alternate line option originated call and releases the house line if it was seized. The alternate line option On Line task then returns to the Check Window entry gate 2505. A call diverted by the alternate line option module will be completed before the alternate line option window can close.

Should query task 2606 result in a No result with respect to extension activity, query task 2607 is started which monitors for the receipt of an inbound call directed to the alternate line option MIN from the cellular carrier. A Yes result to query task 2607 initiates query task 2608 which determines if alternate line option MIN calls are IXC bypass events which should pass to the house line.

If the query task 2608 result is No, process task 2609 is started which answers the alternate line option MIN call and responds to the host Access protocol. Process task 2609 initiates query task 2610 which determines if the remote programming system is the caller. A No result at query task 2610 initiates process task 2611 which drops the alternate line option MIN call and returns control to the check window entry gate 2505.

Should query task 2610 result in Yes, process task 2612 is initiated which captures the remote programming system Update session and initiates process task 2613 which disconnects the alternate line option MIN call and returns to the Check Window entry gate 2505.

If IXC bypass is in effect, query task 2608 will result in Yes and initiate process task 2617 which seizes the house line and generates ring voltage to alert the extensions of an incoming call. Process task 2617 then initiates query task 2618 which monitors to determine if an answer from an extension has occurred.

A No result from query task 2618 initiates query task 2619 which monitors for the continuing presence of the cellular caller. A No result from query task 2619 exits through process task 2613 described above. A Yes result to query task 2617 loops back to the Ring generation process task 2617.

An answer from an extension will force a Yes result to query task 2618 which initiates process task 2620. Process task 2620 connects the house line audio to the cellular radio to enable conversation. Process task 2620 then starts query task 2621 which monitors the call activity. Query task 2621 will remain in a tight loop until a disconnect event occurs. A Yes result to query task 2621 loops back to the input to query task 2621.

When a disconnect event occurs, a No result to query task 2621 initiates process task 2613 described previously.

If the alternate line option MIN was not receiving a call, the No result to query task 2607 initiates query task 2614 which monitors the central office line for Ring Voltage. A No result to query task 2614 returns control to the Check Window entry gate 2505.

A Yes result to query task 2614 starts query task 2615 which monitors the house line for answer from an extension. A query task 2615 No result loops back to the start of query task 2614 to continue monitoring for line Ring.

A Yes result to query task 2615 initiates query task 2616 which monitors the answered call for a disconnect event. If the call is active, the Yes result to query task 2616 loops back to the start of query task 2616 in a tight loop. When the call is completed, a query task 2616 No result returns control to the Check Window entry gate 2505.

During an alternate line option module diverted call when the alternate line option is not operating in the LEC bypass mode, Call Activity query tasks 2635 and 2621 use the alternate line option input line interface to monitor the central office line for presence of ring voltage. Should a call be presented for the house, the alternate line option will issue a call-waiting tone to the house side of the output line interface.

The house line extension user can elect to answer this call by performing a hook-flash. Alternate line option detection of a hook-flash response to an alternate line option call-waiting notification will cause the alternate line option to toggle its output line interface back to the central office line to answer the incoming call.

The cellular call is left up and the called party is effectively placed on hold pending another hook-flash by the house line. Should the caller forget to return to the cellular call on

hold, and simply hang up the extension, the alternate line option will seize the output line interface and generate ring voltage into the house wiring.

When this ring is answered, the alternate line option module will reconnect the cellular call to the house wiring. Should the cellular called party terminate while on hold, the alternate line option module will ignore any further hook-flash from the house wiring.

Alternate line option module detection of an unsolicited hook-flash during an alternate line option completed call in progress will be passed to the cellular system following cellular protocol.

When the alternate line option module operating mode is engaged full-time LEC replacement, the alternate line option line interface is always seized (connected to the house wiring) and never releases. All traffic in or out then will be handled by the alternate line option module and the cellular system.

Customer use of the described system is extremely simple and provides numerous advantages. In purchasing service, the customer has an option of supporting each of the six handsets on up to three pico stations. Thus, a wide variety of pico station placements is possible, i.e. home and office, for the individualized handsets needed within a family.

The activation steps by the customer are simple, including only a need to plug in the pico station, place each handset in close proximity, select the handset activation command and depress the activation button on the base station.

Following registration, handset use effectively parallels that of a standard wire line phone in that dial tone is introduced as soon as the handset is turned on and placed off hook. Thereafter, standard wireless dialing protocol is used.

The special handsets, one for each family member, include select number and selective ring capabilities, which when used in conjunction with the call forwarding function of the system, enable each family member to identify and answer personal calls directed to their individual numbers when at home.

The display features of the handset always let the customer know what class of service is being used and even permit the customers, when entering the home area, to know how many family phones are registered.

Additional features regulate power use of the handsets to conserve battery power whenever possible, and provide a system with minimal neighborhood interference and eavesdropping exposure.

An additional feature is the availability of the cellular system as a private second line for call origination when the pico station is serving another handset within the home area. Obviously, the customer also directly benefits from a variety of service plans at billing rates that meet particular needs.

From a system point of view, the preferred embodiment of the present invention provides a multiple mode personal wireless communications system which integrates into and coexists within a radiotelephone network such as a cellular network. This system provides

both standard and unique additional services to a select group of customers equipped with special handsets, without impacting other customers supported by the network or cellular system. System coexistence is established through use of a reversed control protocol hierarchy on a minimal number of reserved cellular channels which are shared by all of the select group of customers in a unique enhanced cordless mode of operation. System integration has been provided through the strict adherence to established protocol standards and the elimination of the need for frequency plan coordination efforts. In addition, the present invention provides for the unique application of a standard overhead message with programmable contents into the cellular system.

This allows the cellular service provider the means to effectively market its services in the form of zones of coverage which most appeal to customers. These zones can be as small as a single cell site or as large as the entire system. Therefore, a customer may now purchase a service package that provides for Local use pricing in zones of interest and Premium use pricing elsewhere. Existing cellular customer equipment will ignore the additional overhead message and continue to obtain cellular service.

The special handsets of the present invention automatically switch between and operate under existing standard protocols in either analog or digital mode with the standard cellular network. The special handsets utilize a unique protocol in an enhanced cordless mode when within range of their independent, locally interconnected pico cells. In keeping with the object of providing for a ubiquitous telecommunications system, the present invention provides these special handsets with the ability to utilize the cellular network as a private second line for call origination while the handset is within the coverage of the associated pico cell.

The unique location analysis method of the present invention, as practiced by these handsets, inhibits their attempts to communicate with their associated pico cells until they are in the appropriate neighborhood. This conserves battery power and greatly reduces unnecessary transmissions on the reserved channels. Controlling such transmissions enhances the availability of these channels to carry call traffic.

Additionally, the incorporation of internal precision dial tone into these special handsets and the use of dialed number analysis in accordance with the North American Numbering Plan has created a very user friendly and easy to use telephone for the customer. The special handset message display screens of the present invention also add to the user friendliness of the system as demonstrated by the customer's constant awareness of which system portion is providing service and at what relative cost, i.e.. Home - Local - Premium.

In addition, the present invention couples a distinctive ring class feature to the call forward class feature to enable the customer to rapidly identify incoming calls at the pico cell location as belonging to a particular one of the supported special handsets. This is accomplished by having all telephones connected to the house wiring ring with the cadence of the desired handset's ring signal. The present invention also provides an economic benefit to the service provider due to the ability of the special handset to be remotely programmed via the

unique protocol. This capability allows the special handset to be distributed through sales channels not currently available to the service provider which will further reduce the ultimate cost to the customer. In addition, the present invention provides these special handsets with the capability to recognize and operate with up to three separate pico cells providing the customer with the flexibility of establishing multiple home system environments. The service provider benefits by having additional locations where call traffic is off-loaded from the cellular network. This traffic off-loading will allow current cellular networks to deploy the present invention with minimal impact on the existing customer base.

The present invention provides network transparent pico cells that are activated and controlled via a framework of overlay cells that operate independently of the cellular network. As previously explained, this overlay framework uses a unique control protocol on said reserved channels with a use hierarchy that is reversed from cellular.

The unique method of control eliminates the need for the pico cells to contact, communicate with or become part of the overall cellular network, which allows them to operate transparently to the existing customer base supported by the cellular network. The present invention provides that each pico cell will consist of a spectrally dynamic, noncapturing, frequency agile, multi-purpose base station that is customer installed at customer selected locations. Each pico cell cooperates with the overlay cell framework and supports the enhanced cordless mode of operation of the special handsets. Each pico cell is capable of supporting multiple handsets and constitutes a separate, locally interconnected, limited coverage wireless communications system which effectively off-loads traffic from the cellular system. This is accomplished by each pico cell independently handling its registered special handset call traffic through said local interconnect to the PSTN without cellular network involvement.

In addition, however, as cellular network traffic capacities increase, an element of the present invention known as an alternate line option module can provide a wireless local interconnect capability. The alternate line option module is remotely programmable and allows the cellular service provider to selectively transfer or allocate call traffic to and from the public switched telephone network to and from the cellular radiotelephone network, creating a totally wireless system, if desired.

This alternate line option module includes in its programmable operating criteria the data needed to internally determine when it will operate and what specific functions it will perform.

As provided in the present invention, the alternate line option module can be deployed independently of the rest of the elements as an adjunct to the existing cellular network. This element is effectively an intelligent central office substitute when it becomes active in feeding the house wiring in lieu of the normal PSTN connection. This ability to provide a wireless interconnect alternative, while maintaining full compatibility with all existing equipment that is

currently connected to the house wiring, will allow the cellular service provider to compete effectively for the local exchange market.

The present invention also provides service control units and host stations to facilitate wireless activation and control of each pico cell and special handset via the overlay cell framework. These elements of the system assure the integrity of each deployment while eliminating much of the manpower previously required. The method of integration to the existing customer activation system and the secure protocol greatly reduce the opportunity for fraudulent practices.

The present invention provides for incorporation of the capabilities of the remote programming system while eliminating the need for data modem hardware at the terminal equipment (pico cell and handset). This simplification of hardware coupled with the enhanced speed of operation, due to the improved data rate provided by the 10K bit channel, has now created an economically viable remote programming process.

CLAIMS

What is claimed is:

1. A telecommunications system including a portable handset (32) with a transceiver (54, 55) capable of operating in accordance with two control protocols, wherein the improvement comprises:

a local pico station (26) including a transceiver capable of exchanging communications with the handset (32) in accordance with one of the control protocols when the handset is within local range, and

switching means (1418) for automatically setting the handset transceiver to engage in communications with a land station (10) under the other control protocol when the handset (32) is moved beyond range of the local pico station.

2. The system of Claim 1 wherein the handset (32) operates in accordance with cellular protocol when away from the pico station (26) and in accordance with a unique control protocol when within local range of the pico station (26).

3. The system of Claim 1 where the pico station (26) is adapted to be connected to the public switched telephone network (20).

4. The system of Claim 1 wherein the communications between the handset and the pico station include both call and command communications.

5. The system of Claim 1 further including an alternate line module (22) connected to the pico station (26) for selectively diverting call communications from the handset (32) to the pico station (26) through a cellular station (10).

6. The system of Claim 1 further including a remote land station (10) with a transceiver set to communicate with the handset (32) under the other protocol when the handset (32) is outside local range of the local pico station (26).

7. A telecommunications system wherein the improvement comprises:

a portable handset (32) with a transceiver capable of communicating in accordance with two control protocols,

a local pico station (26) with a transceiver capable of communicating with the handset (32) under one of the control protocols when the handset (32) is in local range of the pico station (26), said pico station (26) being adapted to be connected to the public switched telephone network (20),

a remote land station (10) with a transceiver capable of communicating with the handset (32) under the other control protocol when the handset (32) is outside local range of the local pico station (26), said remote land station (10) also being adapted to be connected to the public switched telephone network (20) through a communications link, and

switching means (1418) for automatically setting the handset transceiver to engage in communications with the local pico station (26) when the handset is within local range of said pico station (26).

8. The system of Claim 7 wherein the handset (32) operates in accordance with cellular protocol when away from the pico station and in accordance with a non-cellular control protocol when within local range of the pico station (26).

9. The system of Claim 7 further including an alternate line module (22) connected to the pico station (26) for selectively diverting call communications from the handset (32) to the pico station (26) back to a cellular land station (10).

10. The system of Claim 7 further including a remote land station (10) with a transceiver set to communicate with the handset (32) under the other protocol when the handset (32) is outside local range of the local pico station (26).

11. The system of Claim 7 further including control means for exchanging control communications with the local pico station.

12. The system of Claim 11 further including remote programming means associated with the control means for remotely programming the handsets through the pico station-handset communications link.

13. The system of Claim 11 wherein the control means includes an overlay cell with a transceiver capable of exchanging communications with the local pico station under the said one control protocol, and a service control unit (12) connected to the overlay cell.

14. The system of Claim 13 further including a host station (17) interconnected with the service control unit (12) for supplying command information thereto.

15. The system of Claim 14 further including a customer activation system associated with the control means for communicating customer activation system information to the pico station (32) via the service control unit (12).

16. In a multiple mode communications system including radio handsets (32) capable of communicating selectively with land stations (10) of a central radiotelephone network or pico stations (26) supported on a local radio network, a location analysis process wherein the improvement comprises the steps of:

a) comparing (1714, 1715) in a handset (32) of the system, cellular signaling channel identity information with a pre-selected profile of such information,

b) generating a trigger signal (1720) in response to a match of said information.

17. The process of Claim 16, further including the steps of

a) in response to said trigger signal, periodically transmitting (1720) an access request signal from a handset (32), and

b) upon receipt of a pico station response, performing a registration handshake (1721) with the pico station.

18. The process of Claim 17, further including the step of initiating a call forwarding process (1723) to send calls for the handset (32) initiated on the central network of the system to the pico station (26) upon which the handset is registered.

19. The process of Claim 18, further including the step of switching (1724) the handset (32) to a local communication mode with the pico station (26) upon which the handset (32) is registered.

20. The process of Claim 19, further including the steps of:

a) placing (1419) a message on a display (35) of the handset (32) that indicates to a user that the handset is in home mode, and

b) reducing (1428) the power level of the handset to a level below that of standard network operation.

21. A method of operating a cellular radio telecommunication network to remotely program cellular radiotelephone units, said method comprising the steps of:

identifying an electromagnetic spectrum to be used by said network;

dedicating a first portion of said spectrum to exclusive use in controlling and setting up calls;

dedicating a second portion of said spectrum to exclusive use conveying voice communications for said calls; and

dedicating a third portion of said spectrum to exclusive use in remotely programming said units so that said units may participate in said calls.

22. A method as claimed in Claim 21 additionally comprising the step of communicating over said second and third portions of said spectrum using a common data communication protocol.

23. A method as claimed in Claim 22 wherein said data communication protocol is 10K bit Manchester digital modulation.

24. A method as claimed in Claim 21 wherein:

said network includes distinct A and B cellular systems; and

each of said first, second, and third portions are subdivided into A and B sub-portions that are exclusively used by said A and B cellular systems, respectively.

25. A method as claimed in Claim 21 additionally comprising the steps of:

determining, at said units, when said units are instructed to operate in an activation mode; and

tuning one of said units to said third portion of said spectrum when said one unit operates in said activation mode.

26. A method as claimed in Claim 25 additionally comprising, after said tuning step, the step of monitoring, at said one unit, said third portion of said spectrum for a data communication message directed to said one unit.

27. A method as claimed in Claim 25 additionally comprising, after said tuning step, the steps of:

receiving a radio communication that conveys remote programming data at said one unit; and

determining, at said one unit, whether said remote programming data are directed to said one unit.

28. A method of operating a radiotelecommunications system to control transmission power levels and coverage areas of said system, said method comprising the steps of:

transmitting signals between a base station and a radiotelephone unit;

permitting said unit to access said system to participate in communication services when the strength of said signals exceeds an access threshold; and

preventing said unit from receiving communication services when said signal strength falls below a drop threshold, said drop threshold being less than said access threshold.

29. A method as claimed in Claim 28 additionally comprising the steps of:

measuring, at said base station, signal strength of transmissions emanating from said unit;

determining whether said signal strength is below a warning threshold, said warning threshold being greater than said drop threshold and less than said access threshold.

30. A method as claimed in Claim 29 additionally comprising the steps of:

sending, from said base station when said signal strength is below said warning threshold, a warning order to said unit; and

annunciating, in response to said sending step, said warning order at said unit.

31. A method as claimed in Claim 30 wherein said preventing step comprises the steps of:

determining whether said warning order has been sent to said unit; and

continuing, until after said warning order has been sent to said unit, to permit said unit to participate in communication services when the strength of said signals falls below said drop threshold.

32. A method as claimed in Claim 30 wherein said annunciating step comprises the step of generating an audible signal.

33. A method as claimed in Claim 32 wherein:

said unit includes a loudspeaker and a microphone;

said audible signal is annunciated at said loudspeaker; and

said method additionally comprises the step of muting said microphone while said audible signal is being annunciated.

34. A method of operating a radiotelephone handset which has a display and which shares a common communication channel with other handsets, said method informing a user of an operational status of said handset, said method comprising the steps of:

displaying a first message at said display when said common line is available for use;

displaying a second message at said display when said common line is in use but no other handset is using said common line, said second message conveying a line in use status; and

displaying a third message at said display when said common line is in use and another handset is using said common line, said third message conveying a handset in use status.

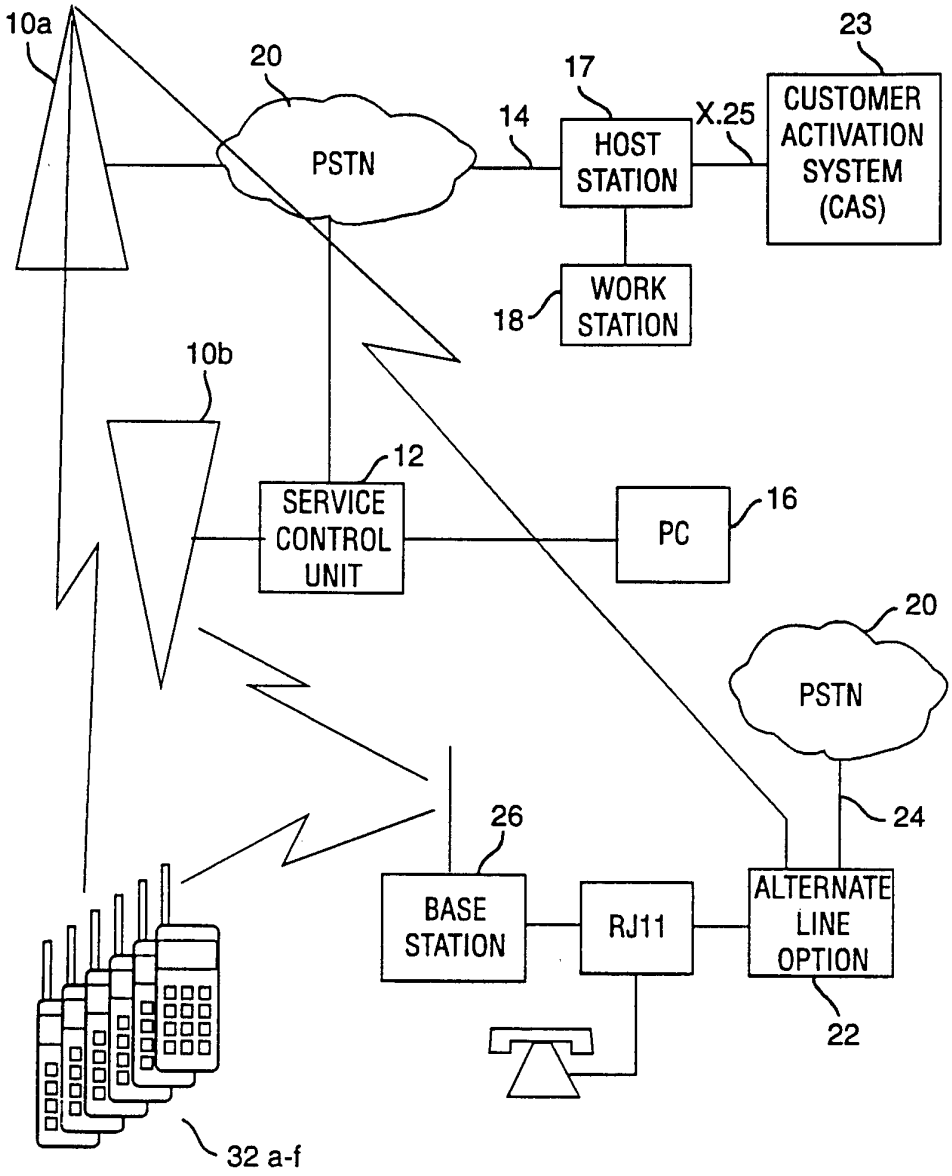
10a
20
PSTN
14
17
HOST STATION
X.25
23
CUSTOMER ACTIVATION SYSTEM (CAS)
18
WORK STATION
10b
12
SERVICE CONTROL UNIT
PC
16
20
PSTN
24
26
BASE STATION
RJ11
ALTERNATE LINE OPTION
22
32 a-f

FIG. 1

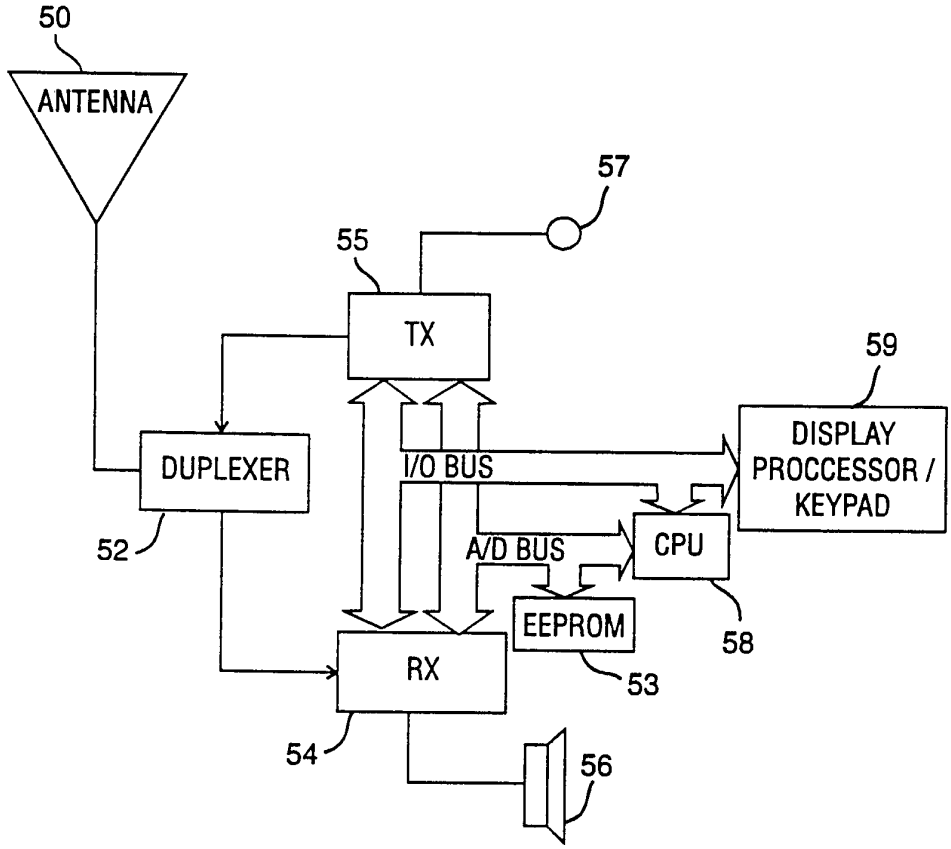
50
ANTENNA
57
55
TX
59
DISPLAY
PROCCESSOR /
KEYPAD
DUPLEXER
I/O BUS
52
A/D BUS
CPU
EEPROM
58
RX
53
54
56

FIG. 2

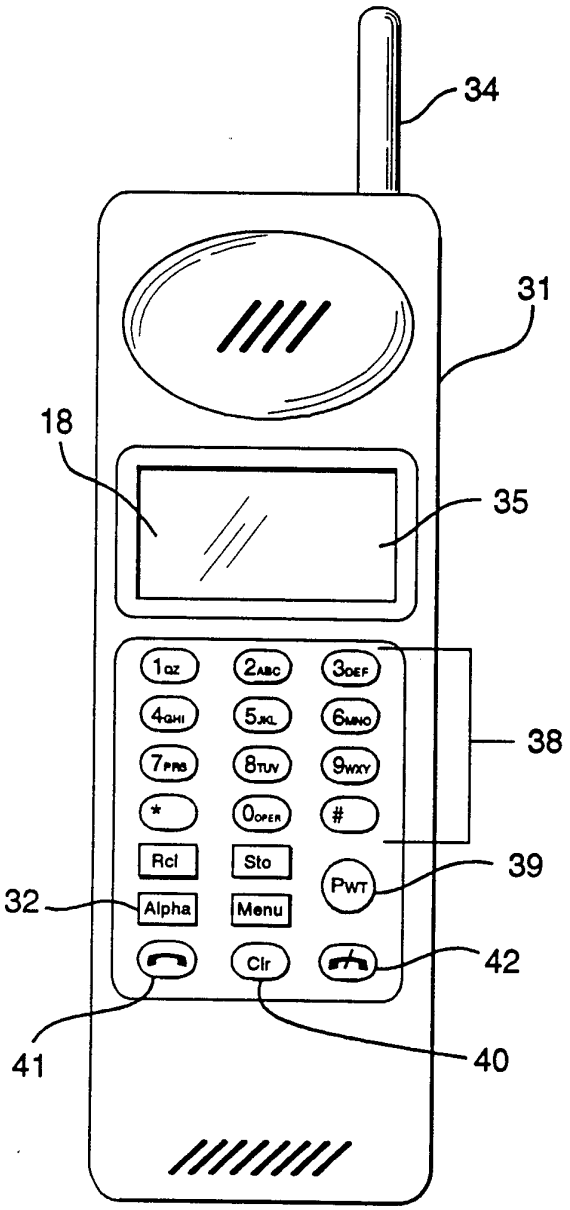

FIG. 3

4/33

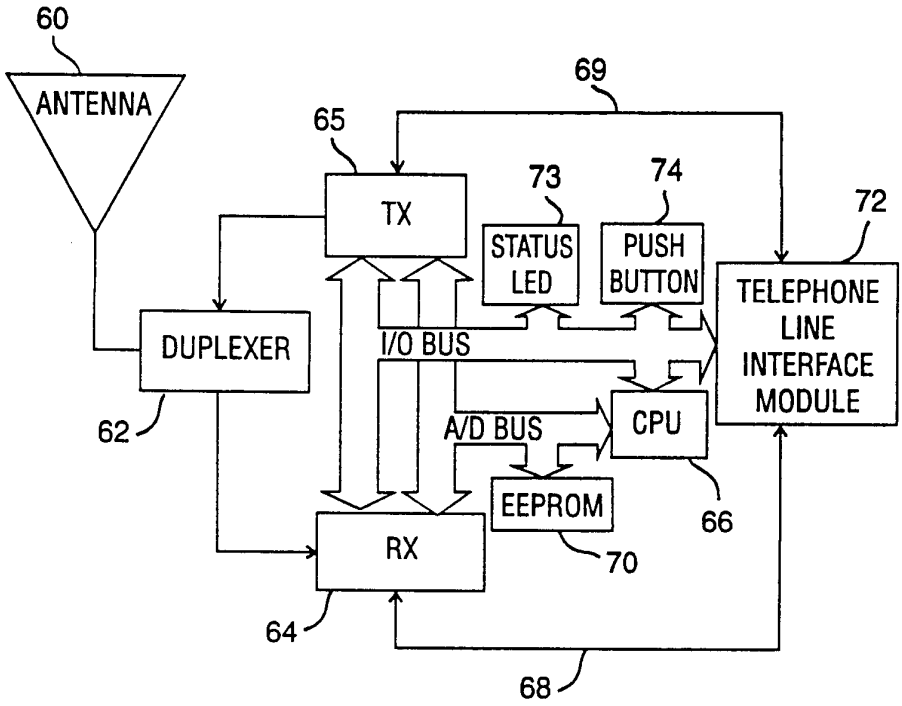
60
ANTENNA
69
65
TX
73
74
72
STATUS LED
PUSH BUTTON
TELEPHONE LINE INTERFACE MODULE
DUPLEXER
I/O BUS
62
A/D BUS
CPU
EEPROM
66
70
RX
64
68

FIG. 4

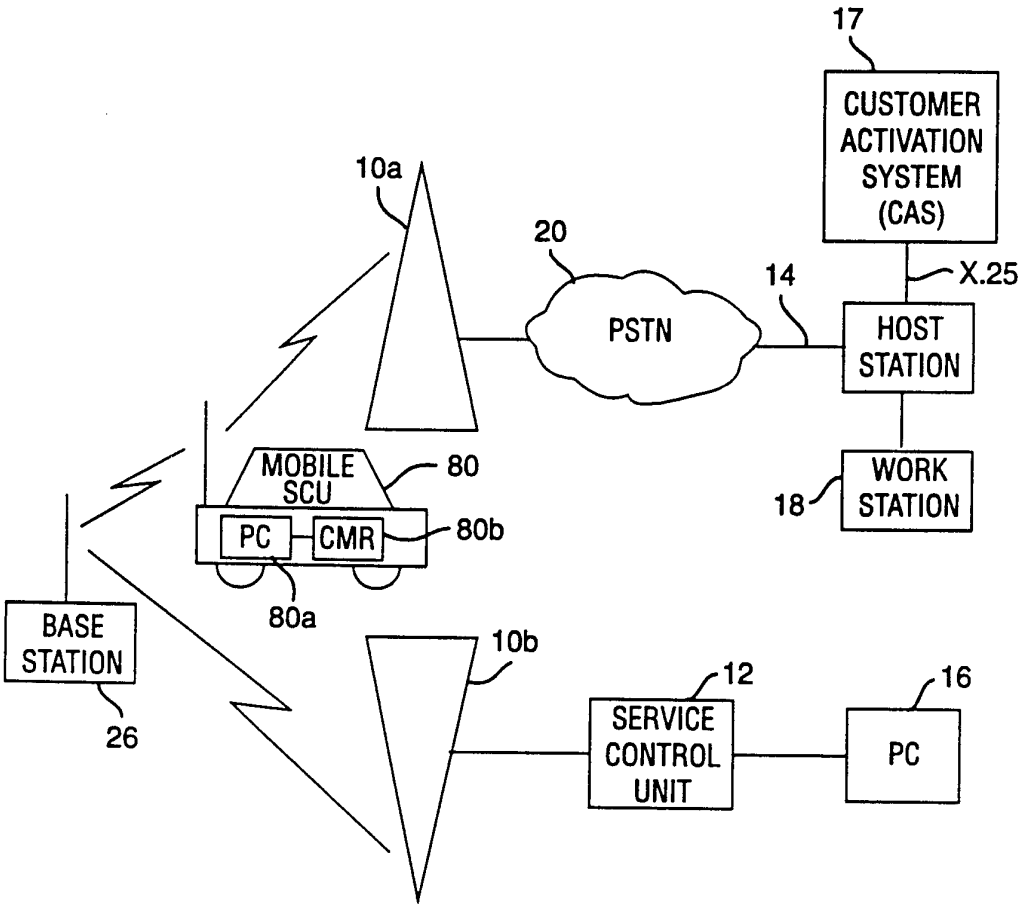
17
CUSTOMER ACTIVATION SYSTEM (CAS)
10a
20
14
X.25
PSTN
HOST STATION
MOBILE SCU
80
PC
CMR
80b
80a
18
WORK STATION
BASE STATION
26
10b
12
16
SERVICE CONTROL UNIT
PC

FIG. 5

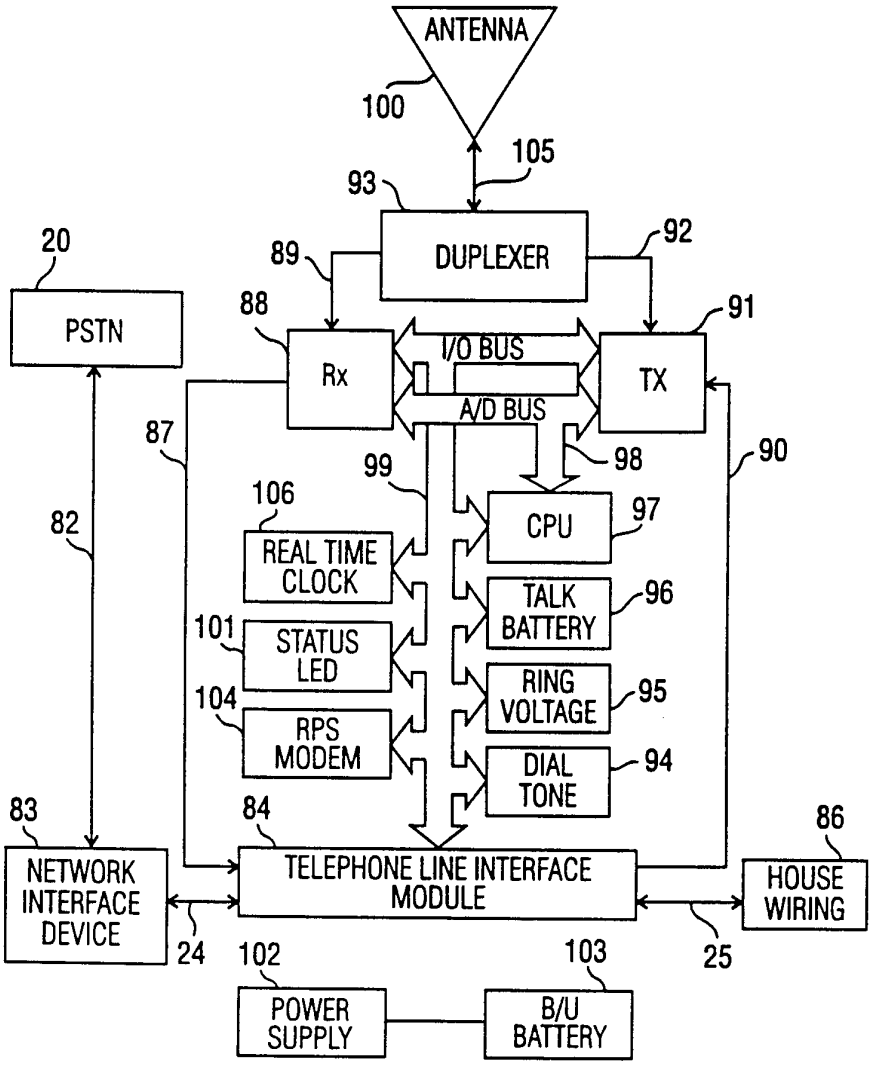
ANTENNA
100
105
93
DUPLEXER
92
20
89
88
91
PSTN
Rx
I/O BUS
TX
A/D BUS
87
98
90
99
106
CPU
97
82
REAL TIME CLOCK
TALK BATTERY
96
101
STATUS LED
RING VOLTAGE
95
104
RPS MODEM
DIAL TONE
94
83
84
86
NETWORK INTERFACE DEVICE
TELEPHONE LINE INTERFACE MODULE
HOUSE WIRING
24
25
102
103
POWER SUPPLY
B/U BATTERY

FIG. 6

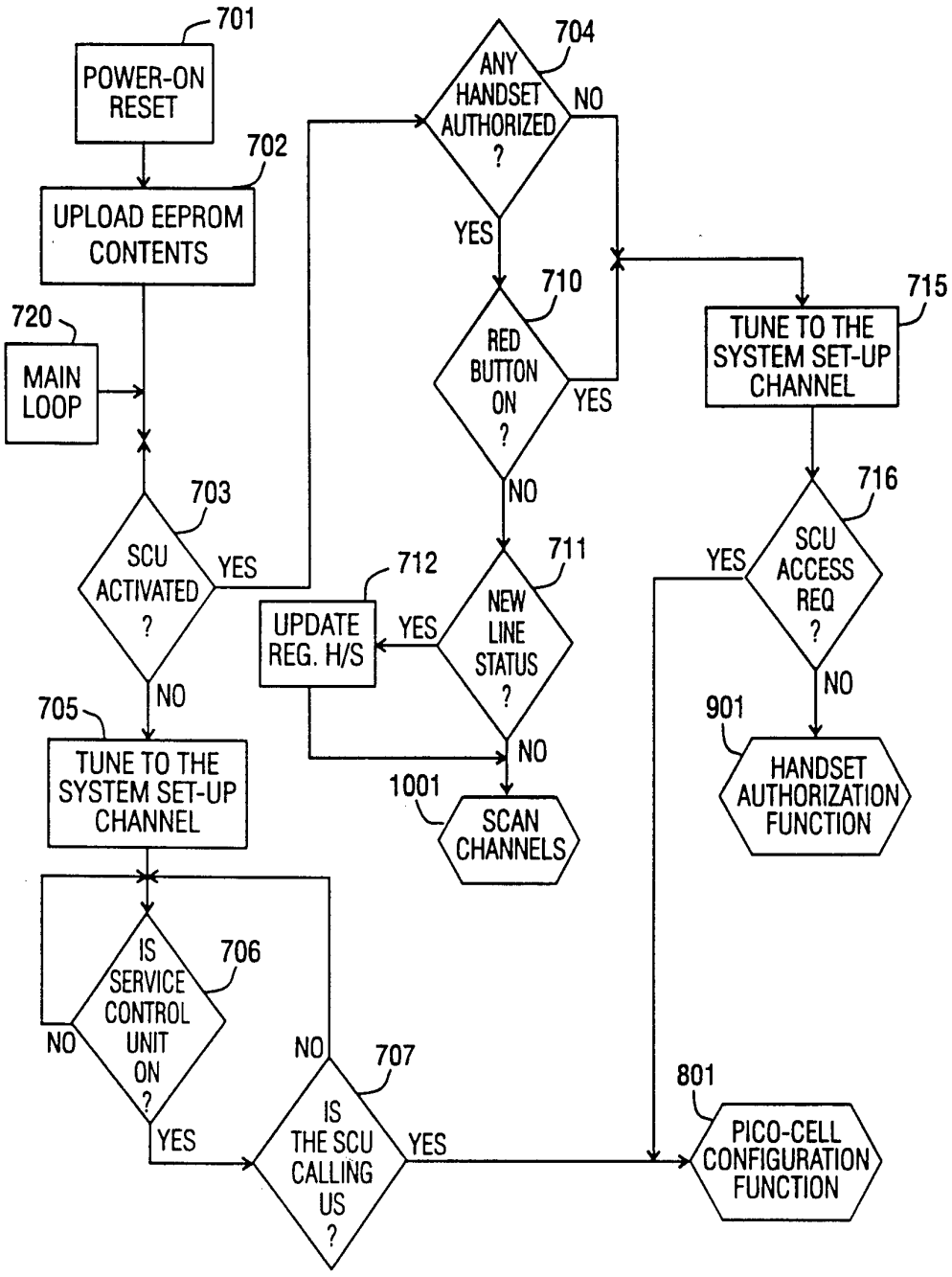
701
POWER-ON RESET
702
UPLOAD EEPROM CONTENTS
720
MAIN LOOP
703
SCU ACTIVATED ?
YES
NO
705
TUNE TO THE SYSTEM SET-UP CHANNEL
706
IS SERVICE CONTROL UNIT ON ?
NO
YES
707
IS THE SCU CALLING US ?
NO
YES
704
ANY HANDSET AUTHORIZED ?
NO
YES
710
RED BUTTON ON ?
YES
NO
711
NEW LINE STATUS ?
YES
NO
712
UPDATE REG. H/S
1001
SCAN CHANNELS
715
TUNE TO THE SYSTEM SET-UP CHANNEL
716
SCU ACCESS REQ ?
YES
NO
901
HANDSET AUTHORIZATION FUNCTION
801
PICO-CELL CONFIGURATION FUNCTION

FIG. 7

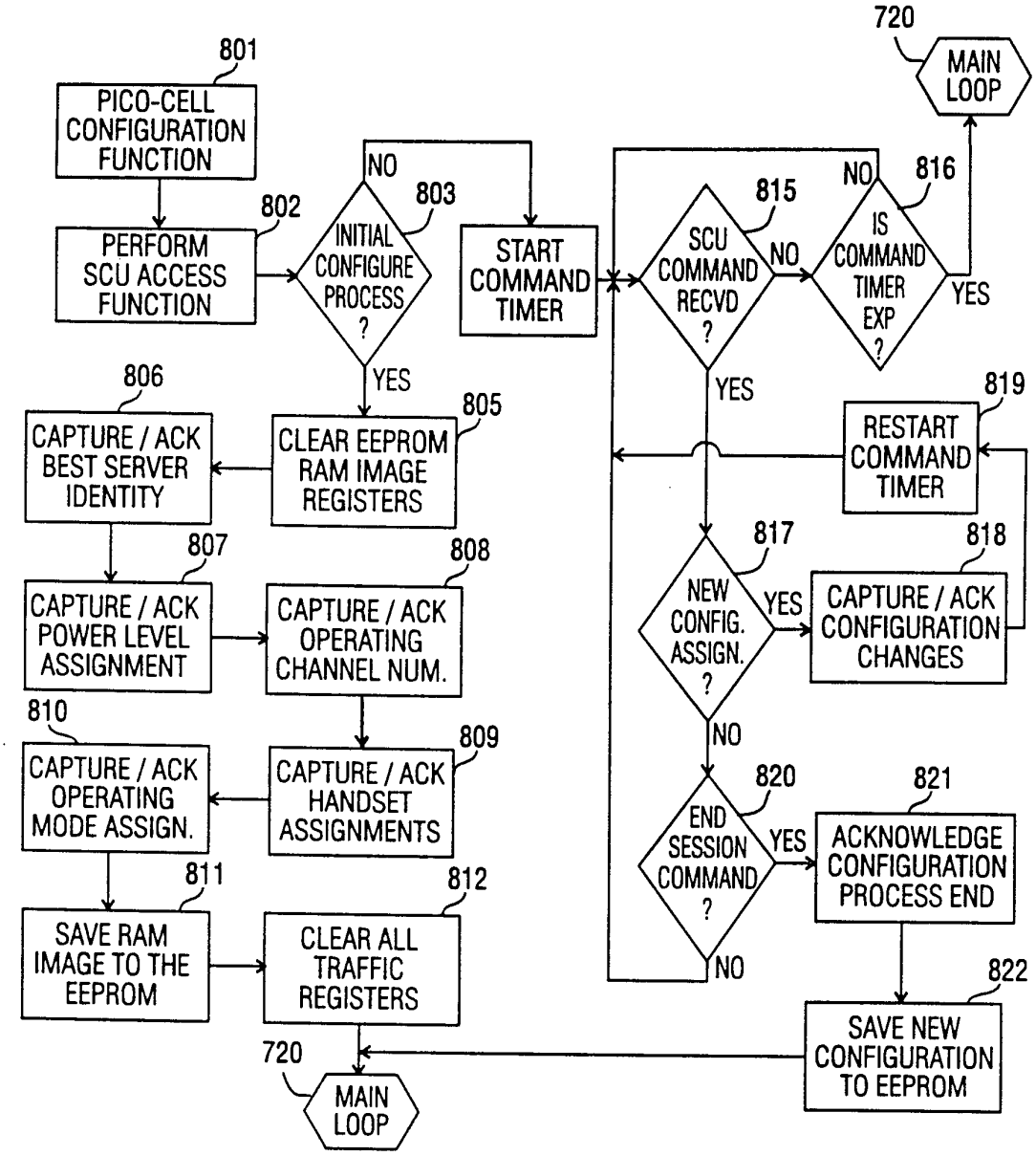
801
PICO-CELL CONFIGURATION FUNCTION
802
PERFORM SCU ACCESS FUNCTION
803
INITIAL CONFIGURE PROCESS ?
NO
YES
START COMMAND TIMER
720
MAIN LOOP
815
SCU COMMAND RECVD ?
NO
YES
816
IS COMMAND TIMER EXP ?
NO
YES
819
RESTART COMMAND TIMER
805
CLEAR EEPROM RAM IMAGE REGISTERS
806
CAPTURE / ACK BEST SERVER IDENTITY
807
CAPTURE / ACK POWER LEVEL ASSIGNMENT
808
CAPTURE / ACK OPERATING CHANNEL NUM.
809
CAPTURE / ACK HANDSET ASSIGNMENTS
810
CAPTURE / ACK OPERATING MODE ASSIGN.
811
SAVE RAM IMAGE TO THE EEPROM
812
CLEAR ALL TRAFFIC REGISTERS
720
MAIN LOOP
817
NEW CONFIG. ASSIGN. ?
YES
NO
818
CAPTURE / ACK CONFIGURATION CHANGES
820
END SESSION COMMAND ?
YES
NO
821
ACKNOWLEDGE CONFIGURATION PROCESS END
822
SAVE NEW CONFIGURATION TO EEPROM

FIG. 8

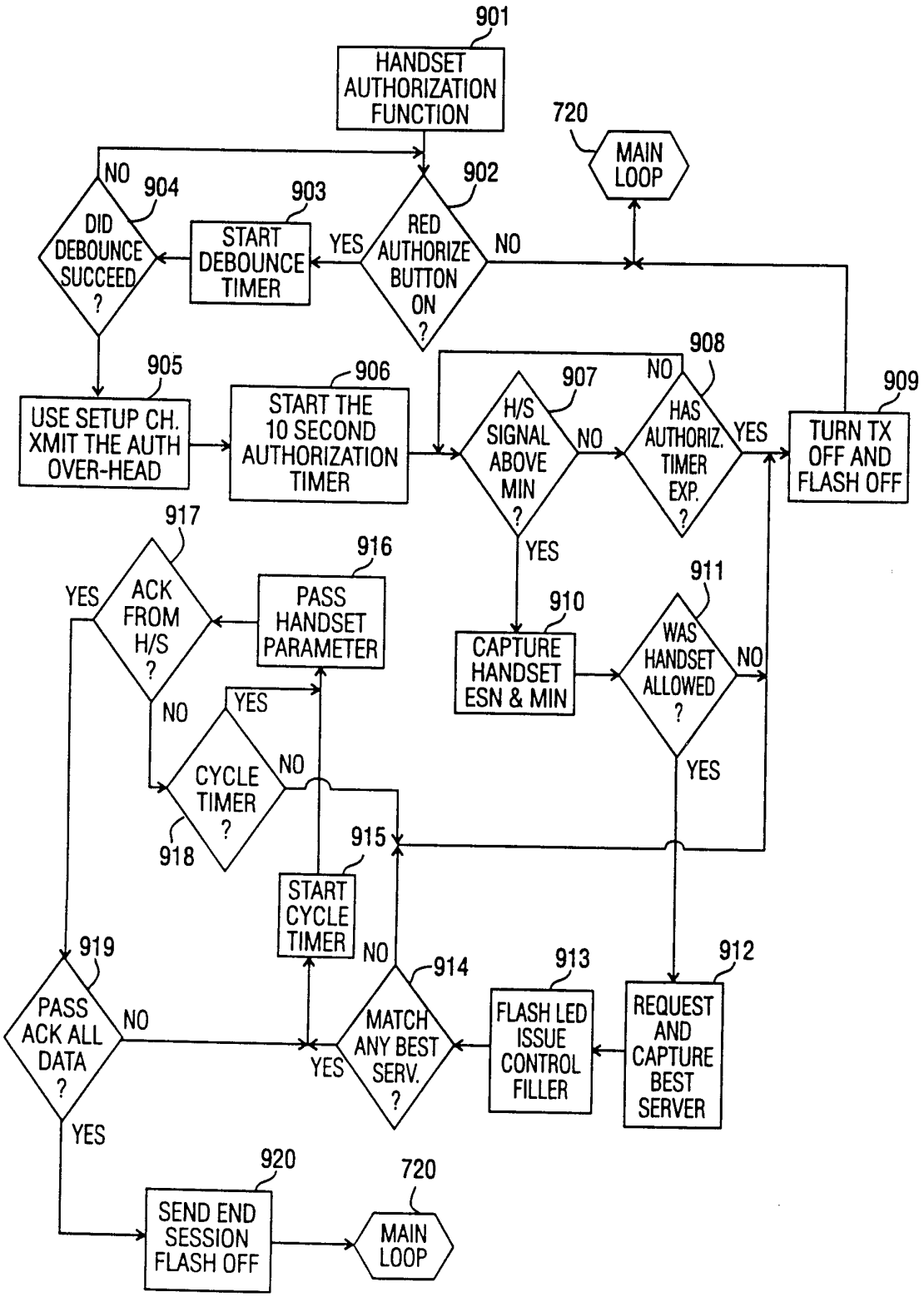
901
HANDSET AUTHORIZATION FUNCTION
720
MAIN LOOP
902
RED AUTHORIZE BUTTON ON ?
YES
NO
903
START DEBOUNCE TIMER
904
DID DEBOUNCE SUCCEED ?
NO
905
USE SETUP CH. XMIT THE AUTH OVER-HEAD
906
START THE 10 SECOND AUTHORIZATION TIMER
907
H/S SIGNAL ABOVE MIN ?
NO
908
HAS AUTHORIZ. TIMER EXP. ?
NO
YES
909
TURN TX OFF AND FLASH OFF
YES
910
CAPTURE HANDSET ESN & MIN
911
WAS HANDSET ALLOWED ?
NO
YES
912
REQUEST AND CAPTURE BEST SERVER
913
FLASH LED ISSUE CONTROL FILLER
914
MATCH ANY BEST SERV. ?
NO
YES
915
START CYCLE TIMER
916
PASS HANDSET PARAMETER
917
ACK FROM H/S ?
YES
NO
918
CYCLE TIMER ?
YES
NO
919
PASS ACK ALL DATA ?
NO
YES
920
SEND END SESSION FLASH OFF
720
MAIN LOOP

FIG. 9

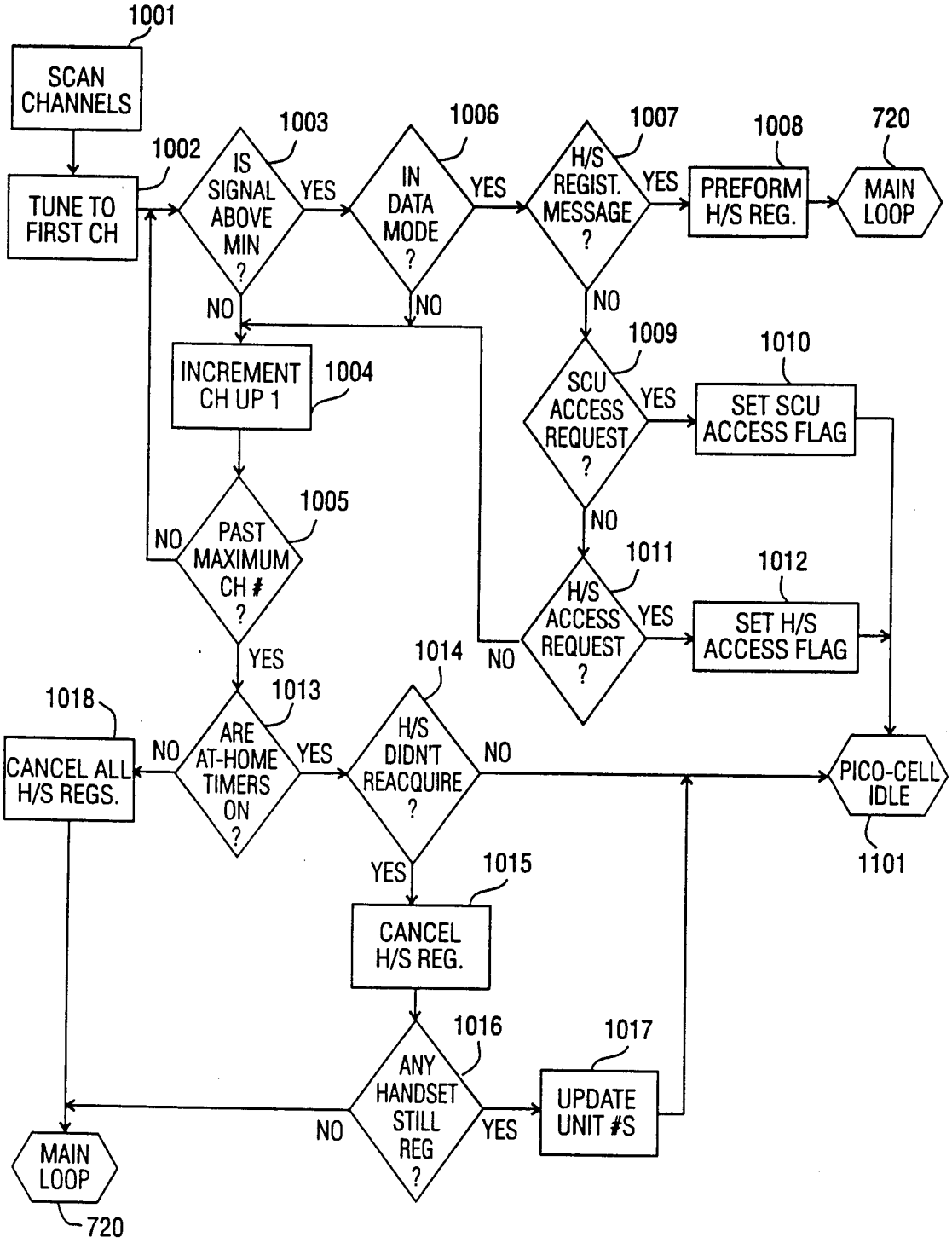
1001
SCAN CHANNELS
1002
TUNE TO FIRST CH
1003
IS SIGNAL ABOVE MIN ?
YES
NO
1004
INCREMENT CH UP 1
1005
PAST MAXIMUM CH # ?
NO
YES
1006
IN DATA MODE ?
YES
NO
1007
H/S REGIST. MESSAGE ?
YES
NO
1008
PREFORM H/S REG.
720
MAIN LOOP
1009
SCU ACCESS REQUEST ?
YES
NO
1010
SET SCU ACCESS FLAG
1011
H/S ACCESS REQUEST ?
YES
NO
1012
SET H/S ACCESS FLAG
1013
ARE AT-HOME TIMERS ON ?
NO
YES
1014
H/S DIDN'T REACQUIRE ?
NO
YES
1015
CANCEL H/S REG.
1016
ANY HANDSET STILL REG ?
NO
YES
1017
UPDATE UNIT #S
1018
CANCEL ALL H/S REGS.
PICO-CELL IDLE
1101
MAIN LOOP
720

FIG. 10

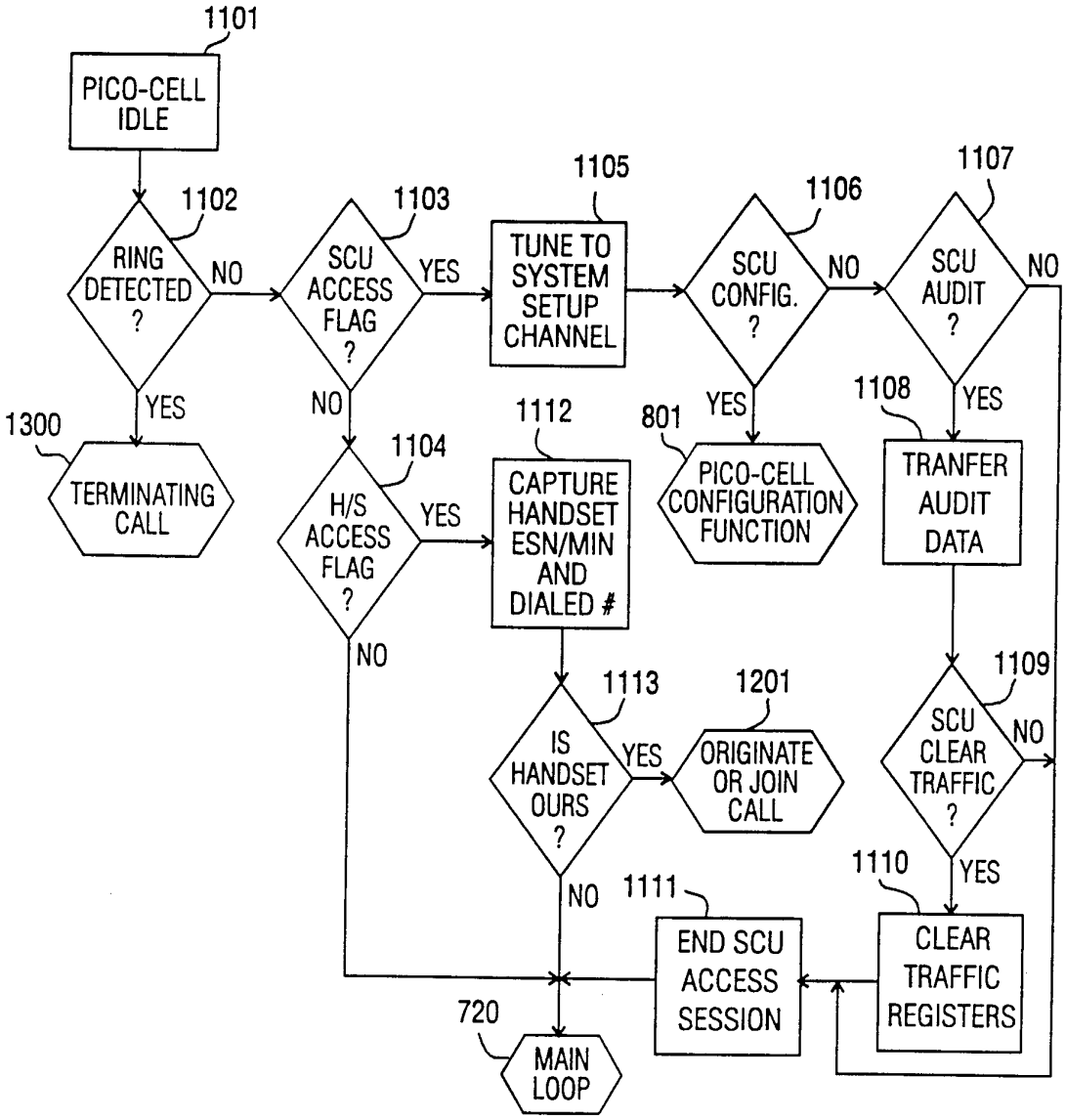
1101
PICO-CELL IDLE
1102
RING DETECTED ?
NO
YES
1300
TERMINATING CALL
1103
SCU ACCESS FLAG ?
YES
NO
1104
H/S ACCESS FLAG ?
YES
NO
1105
TUNE TO SYSTEM SETUP CHANNEL
1112
CAPTURE HANDSET ESN/MIN AND DIALED #
1113
IS HANDSET OURS ?
YES
NO
1201
ORIGINATE OR JOIN CALL
1106
SCU CONFIG. ?
NO
YES
801
PICO-CELL CONFIGURATION FUNCTION
1107
SCU AUDIT ?
NO
YES
1108
TRANFER AUDIT DATA
1109
SCU CLEAR TRAFFIC ?
NO
YES
1110
CLEAR TRAFFIC REGISTERS
1111
END SCU ACCESS SESSION
720
MAIN LOOP

FIG. 11

12/33

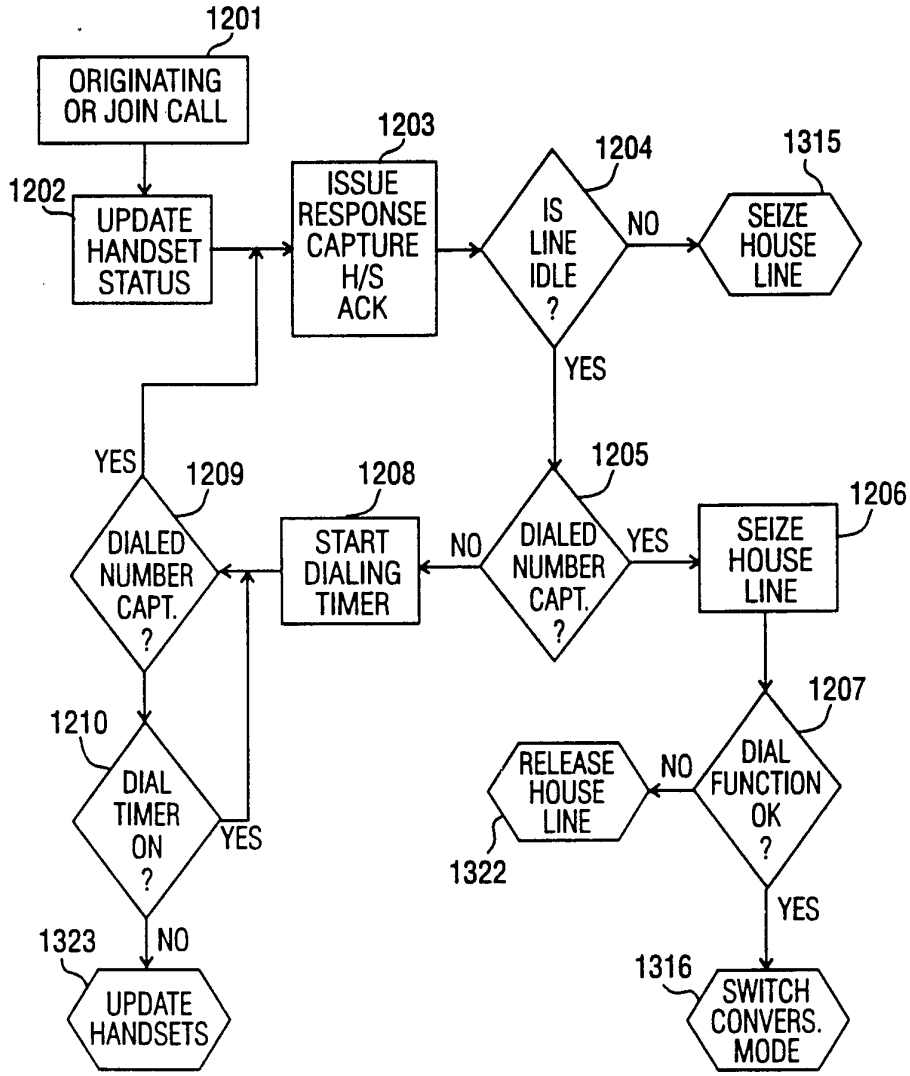
1201
ORIGINATING OR JOIN CALL
1202
UPDATE HANDSET STATUS
1203
ISSUE RESPONSE CAPTURE H/S ACK
1204
IS LINE IDLE ?
NO
1315
SEIZE HOUSE LINE
YES
1205
DIALED NUMBER CAPT. ?
YES
1206
SEIZE HOUSE LINE
NO
1208
START DIALING TIMER
1209
DIALED NUMBER CAPT. ?
YES
1207
DIAL FUNCTION OK ?
NO
RELEASE HOUSE LINE
1322
YES
1316
SWITCH CONVERS. MODE
1210
DIAL TIMER ON ?
YES
NO
1323
UPDATE HANDSETS

FIG. 12

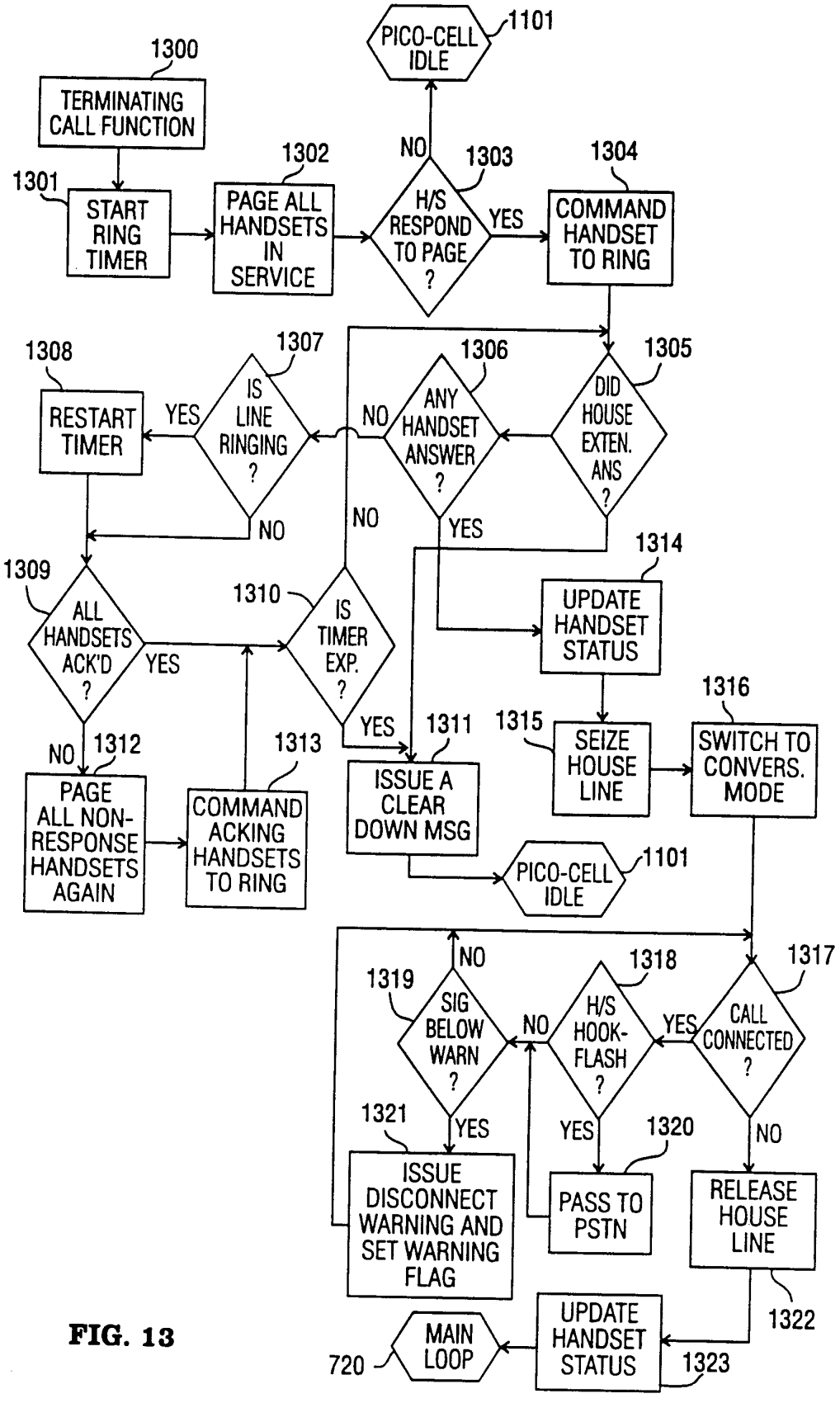
PICO-CELL IDLE
1101
1300
TERMINATING CALL FUNCTION
1301
START RING TIMER
1302
PAGE ALL HANDSETS IN SERVICE
NO
1303
H/S RESPOND TO PAGE ?
YES
1304
COMMAND HANDSET TO RING
1305
DID HOUSE EXTEN. ANS ?
1306
ANY HANDSET ANSWER ?
NO
YES
1307
IS LINE RINGING ?
YES
1308
RESTART TIMER
NO
1309
ALL HANDSETS ACK'D ?
YES
NO
1310
IS TIMER EXP. ?
YES
NO
1311
ISSUE A CLEAR DOWN MSG
1312
PAGE ALL NON-RESPONSE HANDSETS AGAIN
1313
COMMAND ACKING HANDSETS TO RING
1314
UPDATE HANDSET STATUS
1315
SEIZE HOUSE LINE
1316
SWITCH TO CONVERS. MODE
PICO-CELL IDLE
1101
1317
CALL CONNECTED ?
YES
1318
H/S HOOK-FLASH ?
NO
YES
1319
SIG BELOW WARN ?
NO
YES
1320
PASS TO PSTN
1321
ISSUE DISCONNECT WARNING AND SET WARNING FLAG
NO
RELEASE HOUSE LINE
1322
UPDATE HANDSET STATUS
1323
MAIN LOOP
720

FIG. 13

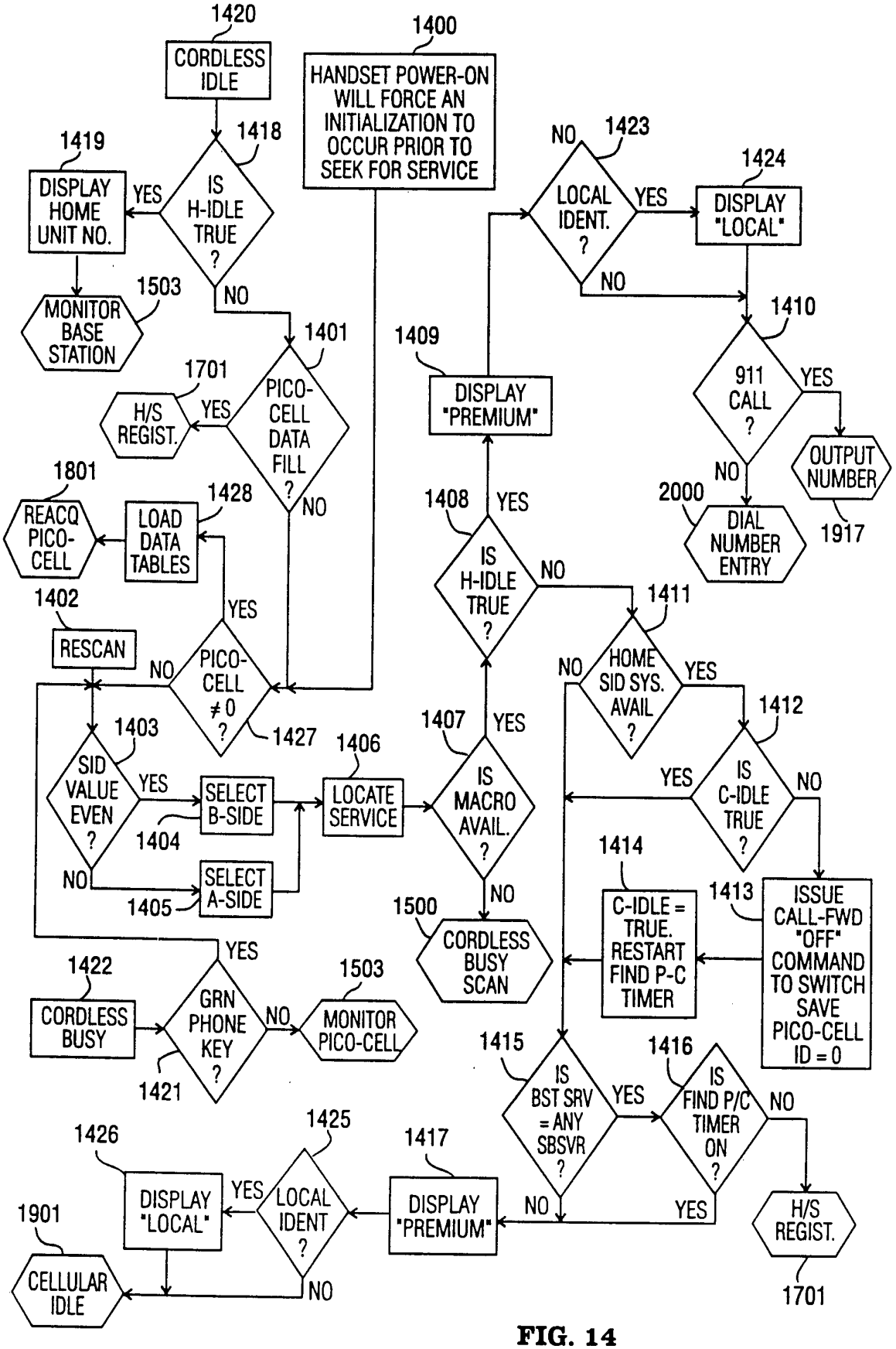
1420
CORDLESS IDLE
1400
HANDSET POWER-ON WILL FORCE AN INITIALIZATION TO OCCUR PRIOR TO SEEK FOR SERVICE
1419
DISPLAY HOME UNIT NO.
YES
1418
IS H-IDLE TRUE ?
NO
1503
MONITOR BASE STATION
1401
PICO-CELL DATA FILL ?
1701
H/S REGIST.
YES
NO
1801
REACQ PICO-CELL
1428
LOAD DATA TABLES
1402
RESCAN
YES
NO
PICO-CELL ≠ 0 ?
1427
1403
SID VALUE EVEN ?
YES
SELECT B-SIDE
1404
1406
LOCATE SERVICE
NO
SELECT A-SIDE
1405
YES
1422
CORDLESS BUSY
GRN PHONE KEY ?
NO
1503
MONITOR PICO-CELL
1421
1426
DISPLAY "LOCAL"
YES
1425
LOCAL IDENT ?
1901
CELLULAR IDLE
NO
1417
DISPLAY "PREMIUM"
1409
DISPLAY "PREMIUM"
1408
YES
IS H-IDLE TRUE ?
NO
1407
YES
IS MACRO AVAIL. ?
NO
1500
CORDLESS BUSY SCAN
NO
1423
LOCAL IDENT. ?
YES
1424
DISPLAY "LOCAL"
NO
1410
911 CALL ?
YES
OUTPUT NUMBER
1917
NO
2000
DIAL NUMBER ENTRY
1411
NO
HOME SID SYS. AVAIL ?
YES
1412
YES
IS C-IDLE TRUE ?
NO
1414
C-IDLE = TRUE. RESTART FIND P-C TIMER
1413
ISSUE CALL-FWD "OFF" COMMAND TO SWITCH SAVE PICO-CELL ID = 0
1415
IS BST SRV = ANY SBSVR ?
YES
1416
IS FIND P/C TIMER ON ?
NO
YES
NO
H/S REGIST.
1701

FIG. 14

15/33

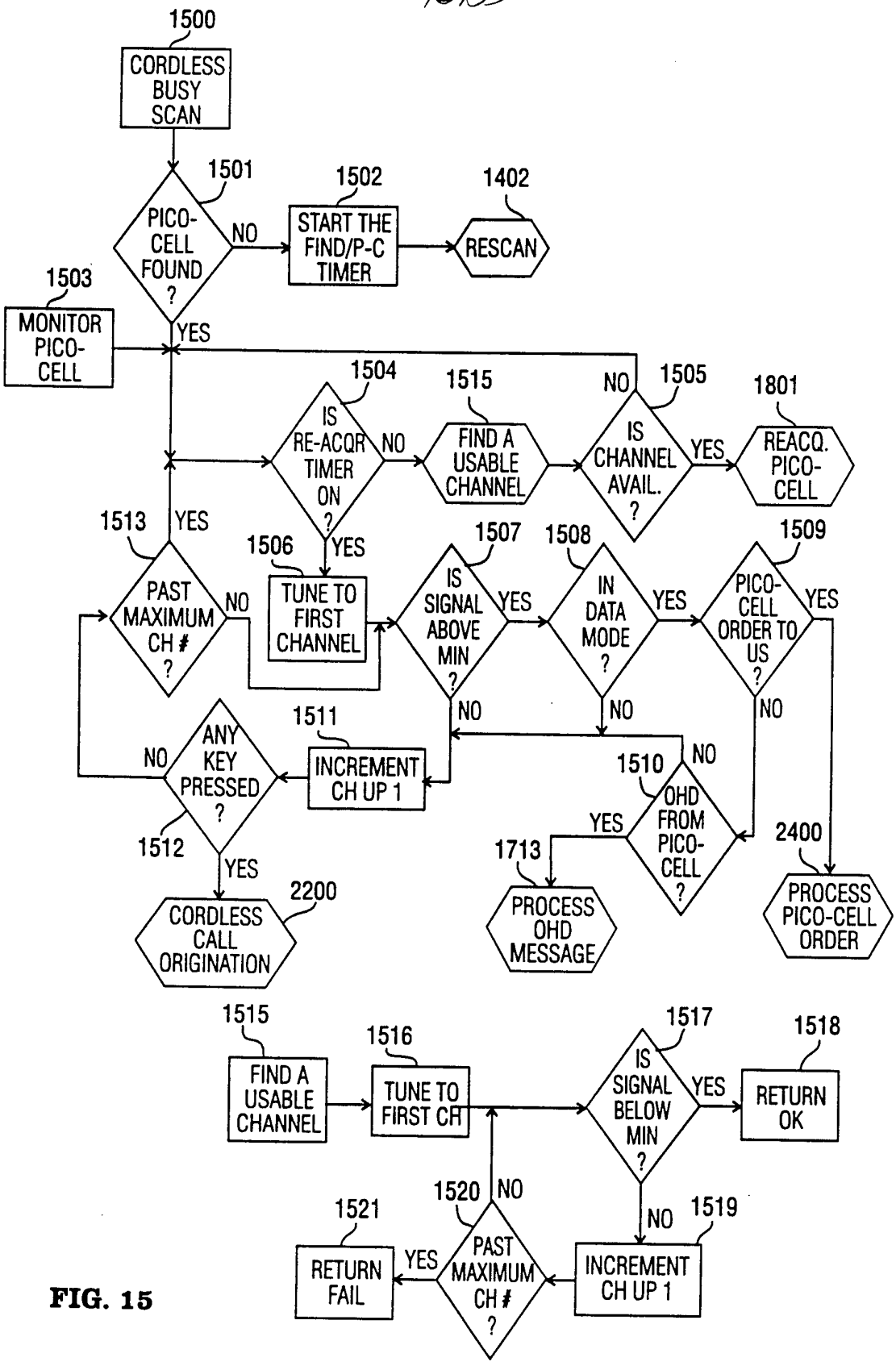
1500
CORDLESS BUSY SCAN
1501
PICO-CELL FOUND ?
NO
1502
START THE FIND/P-C TIMER
1402
RESCAN
1503
MONITOR PICO-CELL
YES
1504
IS RE-ACQR TIMER ON ?
NO
1515
FIND A USABLE CHANNEL
NO
1505
IS CHANNEL AVAIL. ?
YES
1801
REACQ. PICO-CELL
1513
YES
PAST MAXIMUM CH # ?
NO
YES
1506
TUNE TO FIRST CHANNEL
1507
IS SIGNAL ABOVE MIN ?
YES
1508
IN DATA MODE ?
YES
1509
PICO-CELL ORDER TO US ?
YES
NO
NO
NO
1511
INCREMENT CH UP 1
NO
ANY KEY PRESSED ?
NO
1512
YES
2200
CORDLESS CALL ORIGINATION
1510
NO
OHD FROM PICO-CELL ?
YES
1713
PROCESS OHD MESSAGE
2400
PROCESS PICO-CELL ORDER
1515
FIND A USABLE CHANNEL
1516
TUNE TO FIRST CH
1517
IS SIGNAL BELOW MIN ?
YES
1518
RETURN OK
NO
1519
INCREMENT CH UP 1
1520
NO
PAST MAXIMUM CH # ?
YES
1521
RETURN FAIL

FIG. 15

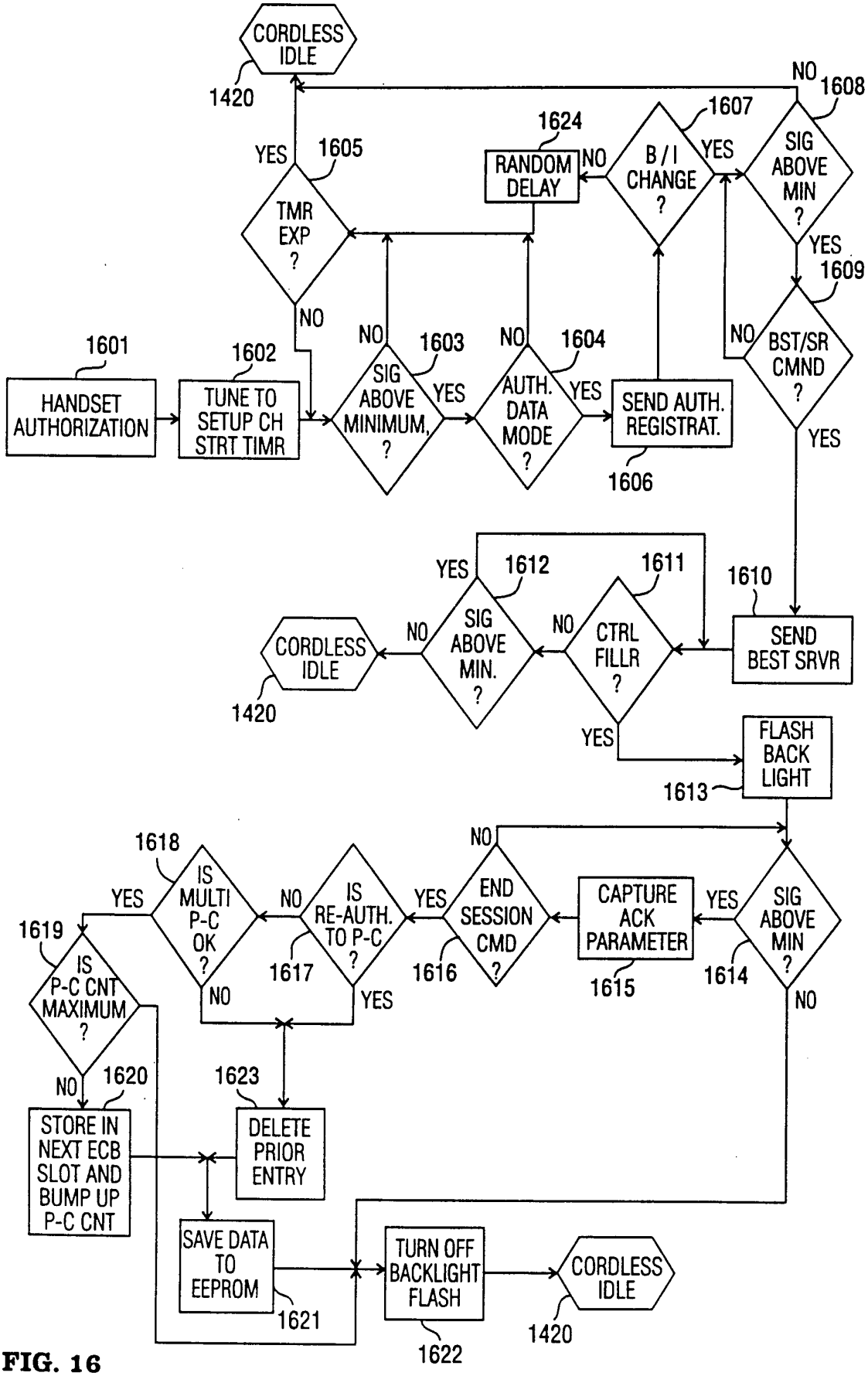
CORDLESS IDLE
1420
NO
1608
1624
1607
YES
1605
RANDOM DELAY
NO
B / I CHANGE ?
YES
SIG ABOVE MIN ?
TMR EXP ?
YES
1609
NO
NO
NO
1601
1602
1603
1604
NO
BST/SR CMND ?
HANDSET AUTHORIZATION
TUNE TO SETUP CH STRT TIMR
SIG ABOVE MINIMUM, ?
YES
AUTH. DATA MODE ?
YES
SEND AUTH. REGISTRAT.
1606
YES
YES
1612
1611
1610
CORDLESS IDLE
NO
SIG ABOVE MIN. ?
NO
CTRL FILLR ?
SEND BEST SRVR
1420
YES
FLASH BACK LIGHT
1613
NO
1618
IS MULTI P-C OK ?
YES
NO
IS RE-AUTH. TO P-C ?
YES
END SESSION CMD ?
CAPTURE ACK PARAMETER
YES
SIG ABOVE MIN ?
1619
1617
1616
1615
1614
NO
IS P-C CNT MAXIMUM ?
NO
1620
1623
STORE IN NEXT ECB SLOT AND BUMP UP P-C CNT
DELETE PRIOR ENTRY
SAVE DATA TO EEPROM
1621
TURN OFF BACKLIGHT FLASH
1622
CORDLESS IDLE
1420

FIG. 16

17/33

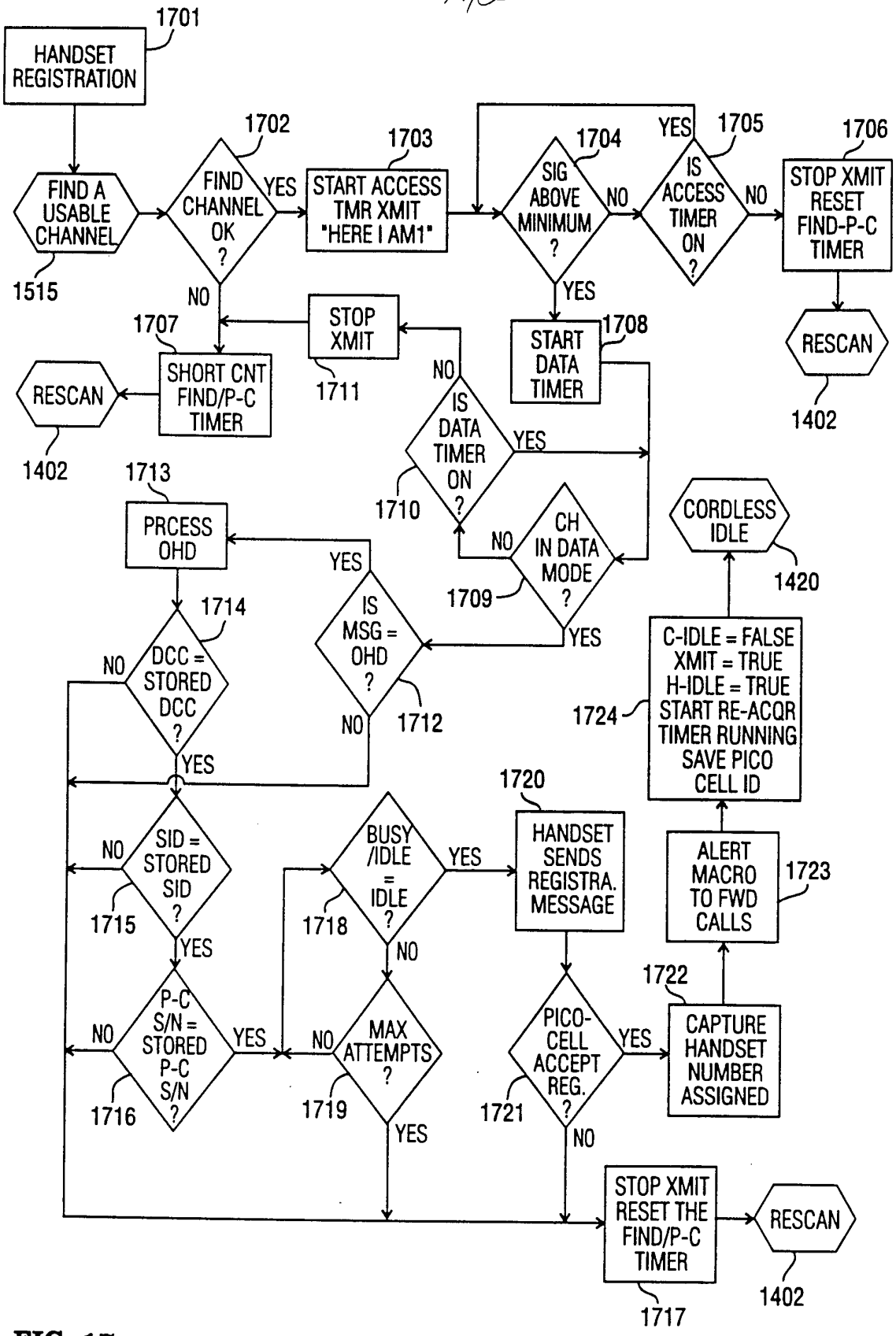
HANDSET REGISTRATION
1701
FIND A USABLE CHANNEL
1515
FIND CHANNEL OK ?
1702
YES
NO
START ACCESS TMR XMIT "HERE I AM1"
1703
SIG ABOVE MINIMUM ?
1704
NO
YES
IS ACCESS TIMER ON ?
1705
YES
NO
STOP XMIT RESET FIND-P-C TIMER
1706
RESCAN
1402
START DATA TIMER
1708
STOP XMIT
1711
SHORT CNT FIND/P-C TIMER
1707
RESCAN
1402
IS DATA TIMER ON ?
1710
NO
YES
CH IN DATA MODE ?
1709
NO
YES
CORDLESS IDLE
1420
C-IDLE = FALSE
XMIT = TRUE
H-IDLE = TRUE
START RE-ACQR TIMER RUNNING
SAVE PICO CELL ID
1724
PRCESS OHD
1713
IS MSG = OHD ?
1712
YES
NO
DCC = STORED DCC ?
1714
NO
YES
SID = STORED SID ?
1715
NO
YES
P-C S/N = STORED P-C S/N ?
1716
NO
YES
BUSY /IDLE = IDLE ?
1718
YES
NO
MAX ATTEMPTS ?
1719
NO
YES
HANDSET SENDS REGISTRA. MESSAGE
1720
PICO-CELL ACCEPT REG. ?
1721
YES
NO
CAPTURE HANDSET NUMBER ASSIGNED
1722
ALERT MACRO TO FWD CALLS
1723
STOP XMIT RESET THE FIND/P-C TIMER
1717
RESCAN
1402

FIG. 17

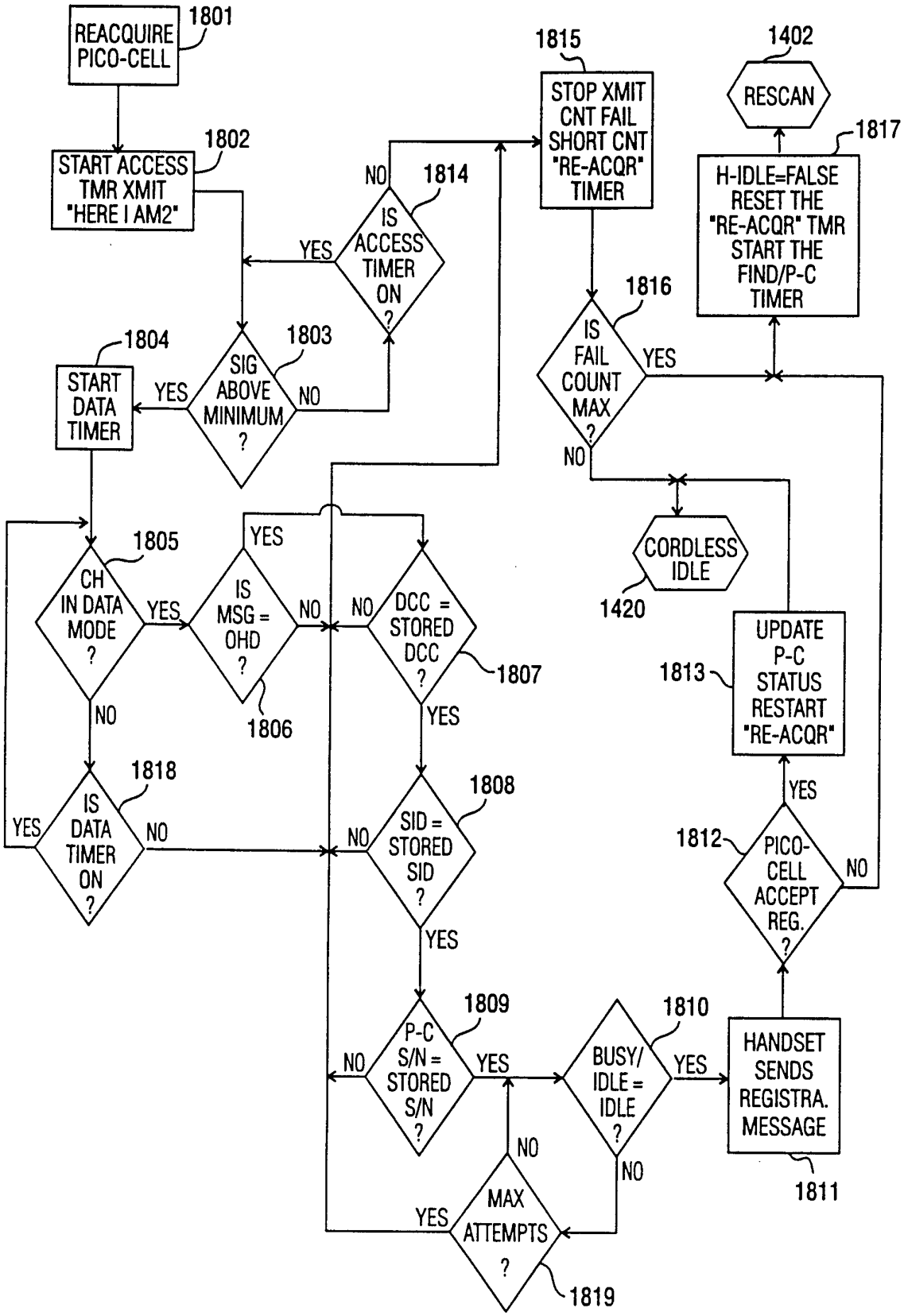
REACQUIRE PICO-CELL
1801
START ACCESS TMR XMIT "HERE I AM2"
1802
IS ACCESS TIMER ON ?
1814
NO
YES
SIG ABOVE MINIMUM ?
1803
YES
NO
START DATA TIMER
1804
CH IN DATA MODE ?
1805
YES
NO
IS MSG = OHD ?
1806
YES
NO
DCC = STORED DCC ?
1807
NO
YES
IS DATA TIMER ON ?
1818
YES
NO
SID = STORED SID ?
1808
NO
YES
P-C S/N = STORED S/N ?
1809
NO
YES
MAX ATTEMPTS ?
1819
YES
NO
BUSY/ IDLE = IDLE ?
1810
YES
NO
HANDSET SENDS REGISTRA. MESSAGE
1811
PICO-CELL ACCEPT REG. ?
1812
YES
NO
UPDATE P-C STATUS RESTART "RE-ACQR"
1813
STOP XMIT CNT FAIL SHORT CNT "RE-ACQR" TIMER
1815
IS FAIL COUNT MAX ?
1816
YES
NO
CORDLESS IDLE
1420
RESCAN
1402
H-IDLE=FALSE RESET THE "RE-ACQR" TMR START THE FIND/P-C TIMER
1817

FIG. 18

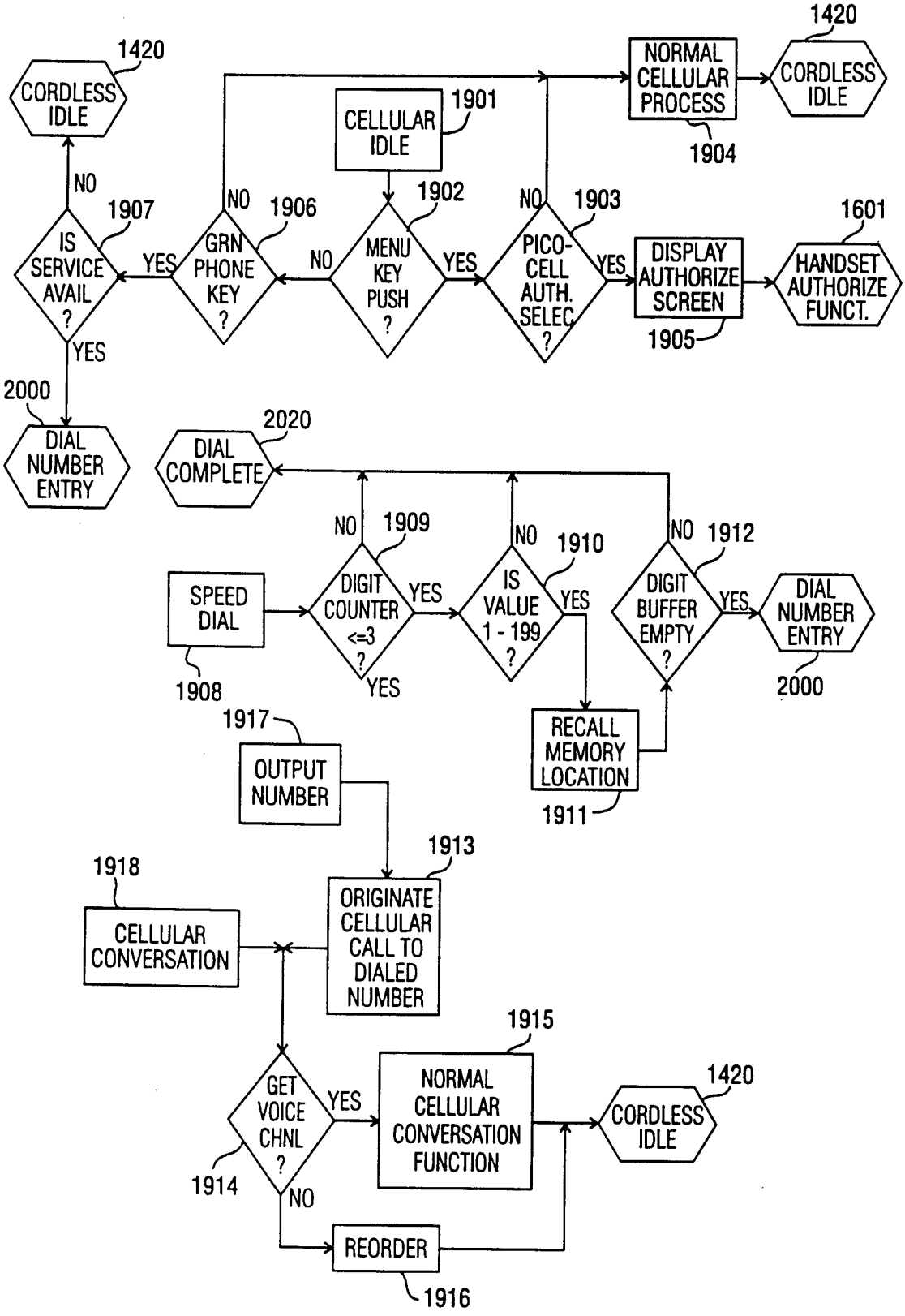
1420
CORDLESS IDLE
NO
1907
IS SERVICE AVAIL ?
YES
2000
DIAL NUMBER ENTRY
NO
1906
GRN PHONE KEY ?
YES
NO
1901
CELLULAR IDLE
1902
MENU KEY PUSH ?
YES
NO
1903
PICO-CELL AUTH. SELEC ?
YES
NORMAL CELLULAR PROCESS
1904
1420
CORDLESS IDLE
DISPLAY AUTHORIZE SCREEN
1905
1601
HANDSET AUTHORIZE FUNCT.
2020
DIAL COMPLETE
NO
1909
DIGIT COUNTER <=3 ?
YES
SPEED DIAL
1908
NO
1910
IS VALUE 1 - 199 ?
YES
RECALL MEMORY LOCATION
1911
NO
1912
DIGIT BUFFER EMPTY ?
YES
DIAL NUMBER ENTRY
2000
1917
OUTPUT NUMBER
1913
ORIGINATE CELLULAR CALL TO DIALED NUMBER
1918
CELLULAR CONVERSATION
1915
GET VOICE CHNL ?
YES
1914
NO
NORMAL CELLULAR CONVERSATION FUNCTION
1420
CORDLESS IDLE
REORDER
1916

FIG. 19

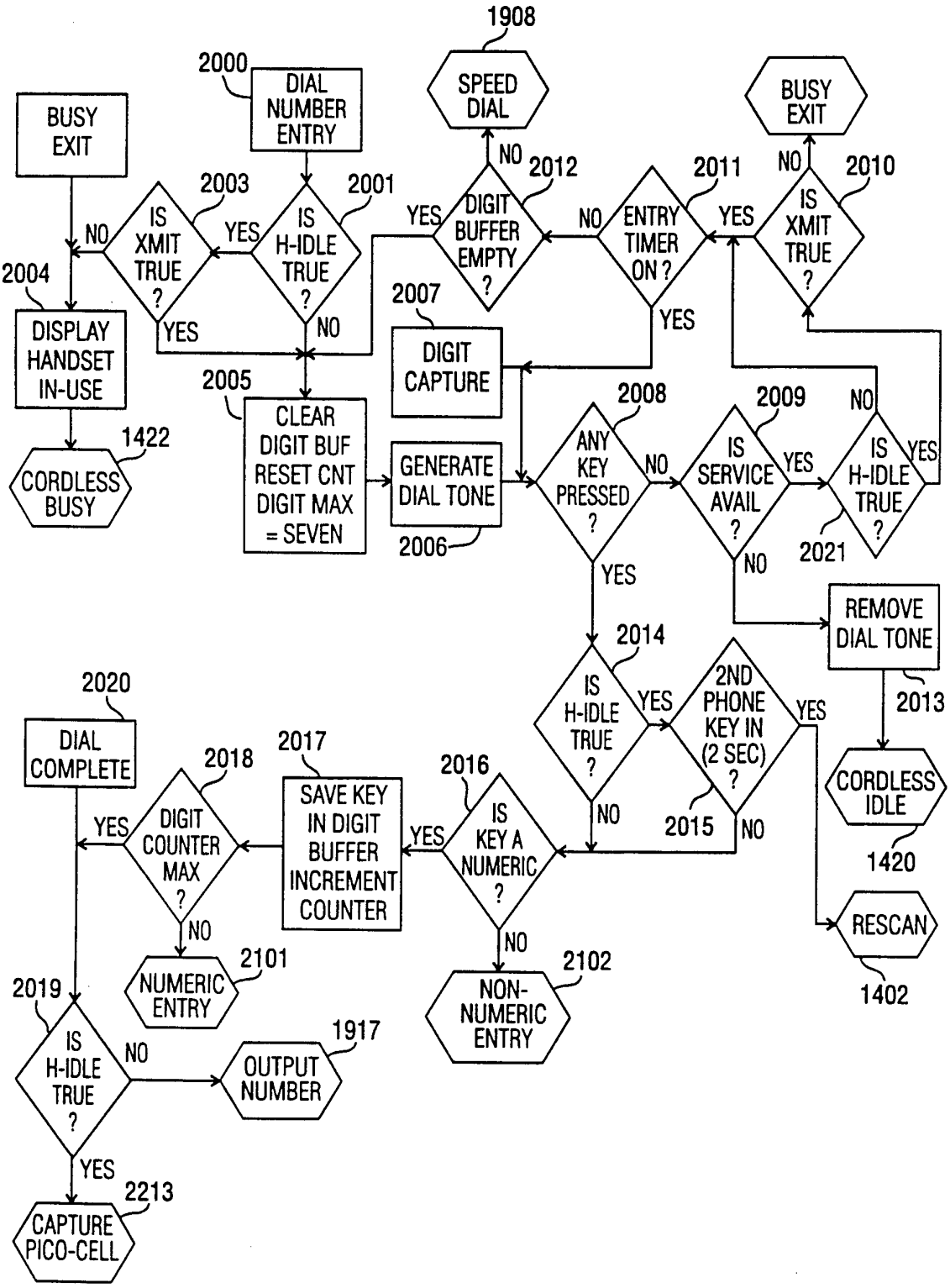
BUSY EXIT
2000
DIAL NUMBER ENTRY
1908
SPEED DIAL
BUSY EXIT
NO
2003
IS XMIT TRUE ?
YES
2001
IS H-IDLE TRUE ?
YES
DIGIT BUFFER EMPTY ?
2012
NO
ENTRY TIMER ON ?
2011
YES
NO
2010
IS XMIT TRUE ?
2004
DISPLAY HANDSET IN-USE
YES
NO
2007
DIGIT CAPTURE
YES
2005
CLEAR DIGIT BUF RESET CNT DIGIT MAX = SEVEN
1422
CORDLESS BUSY
GENERATE DIAL TONE
2006
2008
ANY KEY PRESSED ?
NO
2009
IS SERVICE AVAIL ?
YES
NO
IS H-IDLE TRUE ?
YES
2021
NO
YES
REMOVE DIAL TONE
2013
2014
IS H-IDLE TRUE ?
YES
2ND PHONE KEY IN (2 SEC) ?
YES
NO
2015
NO
CORDLESS IDLE
1420
RESCAN
1402
2020
DIAL COMPLETE
2018
DIGIT COUNTER MAX ?
YES
2017
SAVE KEY IN DIGIT BUFFER INCREMENT COUNTER
2016
IS KEY A NUMERIC ?
YES
NO
NUMERIC ENTRY
2101
NO
2102
NON-NUMERIC ENTRY
2019
IS H-IDLE TRUE ?
NO
1917
OUTPUT NUMBER
YES
2213
CAPTURE PICO-CELL

FIG. 20

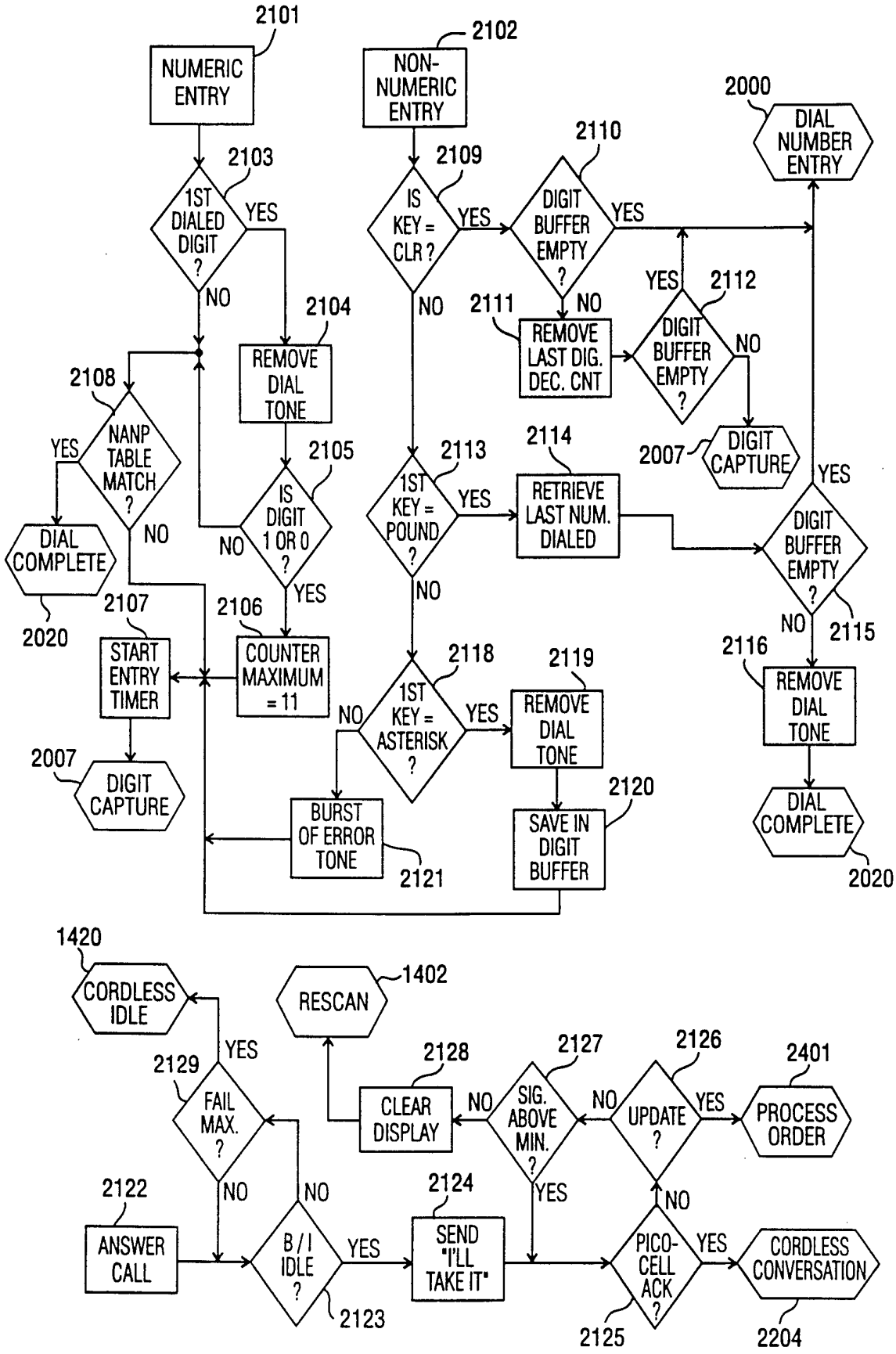
2101
NUMERIC ENTRY
2102
NON-NUMERIC ENTRY
2000
DIAL NUMBER ENTRY
2103
1ST DIALED DIGIT ?
YES
NO
2104
REMOVE DIAL TONE
2109
IS KEY = CLR ?
YES
NO
2110
DIGIT BUFFER EMPTY ?
YES
NO
2111
REMOVE LAST DIG. DEC. CNT
2112
DIGIT BUFFER EMPTY ?
YES
NO
2007
DIGIT CAPTURE
2108
NANP TABLE MATCH ?
YES
NO
DIAL COMPLETE
2020
2105
IS DIGIT 1 OR 0 ?
NO
YES
2113
1ST KEY = POUND ?
YES
NO
2114
RETRIEVE LAST NUM. DIALED
DIGIT BUFFER EMPTY ?
YES
NO
2115
2116
REMOVE DIAL TONE
DIAL COMPLETE
2020
2107
START ENTRY TIMER
2007
DIGIT CAPTURE
2106
COUNTER MAXIMUM = 11
2118
1ST KEY = ASTERISK ?
NO
YES
2119
REMOVE DIAL TONE
2120
SAVE IN DIGIT BUFFER
BURST OF ERROR TONE
2121
1420
CORDLESS IDLE
RESCAN
1402
2129
FAIL MAX. ?
YES
NO
2128
CLEAR DISPLAY
2127
SIG. ABOVE MIN. ?
NO
YES
2126
UPDATE ?
NO
YES
2401
PROCESS ORDER
2122
ANSWER CALL
NO
B / I IDLE ?
YES
NO
2123
2124
SEND "I'LL TAKE IT"
PICO-CELL ACK ?
NO
YES
2125
CORDLESS CONVERSATION
2204

FIG. 21

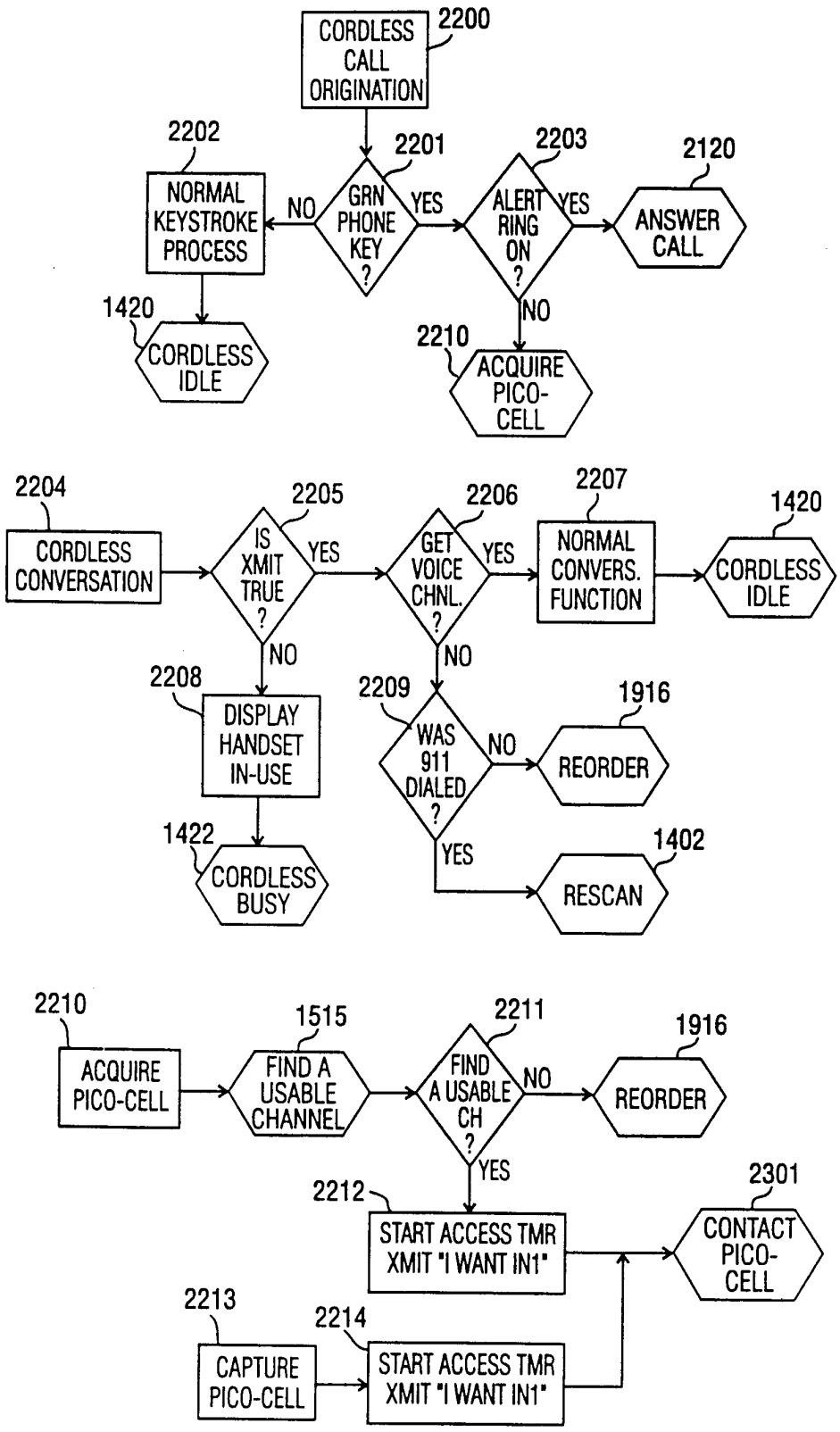
CORDLESS CALL ORIGINATION
2200
2202
NORMAL KEYSTROKE PROCESS
2201
GRN PHONE KEY ?
NO
YES
2203
ALERT RING ON ?
YES
2120
ANSWER CALL
NO
1420
CORDLESS IDLE
2210
ACQUIRE PICO-CELL
2204
CORDLESS CONVERSATION
2205
IS XMIT TRUE ?
YES
2206
GET VOICE CHNL. ?
YES
2207
NORMAL CONVERS. FUNCTION
1420
CORDLESS IDLE
NO
NO
2208
DISPLAY HANDSET IN-USE
2209
WAS 911 DIALED ?
NO
1916
REORDER
1422
CORDLESS BUSY
YES
1402
RESCAN
2210
ACQUIRE PICO-CELL
1515
FIND A USABLE CHANNEL
2211
FIND A USABLE CH ?
NO
1916
REORDER
YES
2212
START ACCESS TMR XMIT "I WANT IN1"
2301
CONTACT PICO-CELL
2213
CAPTURE PICO-CELL
2214
START ACCESS TMR XMIT "I WANT IN1"

FIG. 22

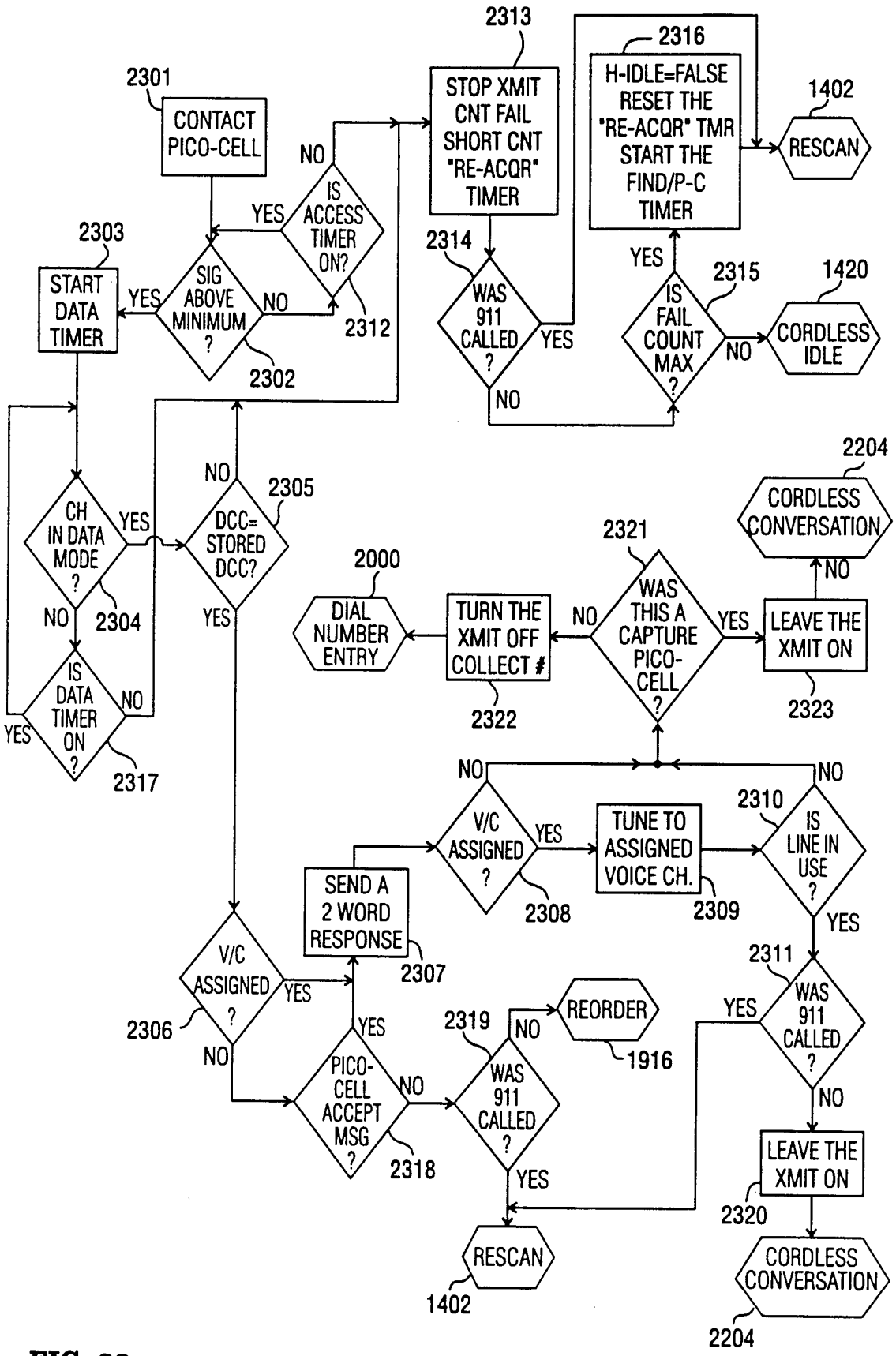
2301
CONTACT PICO-CELL
NO
IS ACCESS TIMER ON?
YES
2312
2313
STOP XMIT CNT FAIL SHORT CNT "RE-ACQR" TIMER
2316
H-IDLE=FALSE RESET THE "RE-ACQR" TMR START THE FIND/P-C TIMER
1402
RESCAN
2303
START DATA TIMER
YES
SIG ABOVE MINIMUM ?
NO
2302
2314
WAS 911 CALLED ?
YES
NO
YES
2315
IS FAIL COUNT MAX ?
NO
1420
CORDLESS IDLE
2204
CORDLESS CONVERSATION
NO
2321
WAS THIS A CAPTURE PICO-CELL ?
NO
YES
LEAVE THE XMIT ON
2323
2000
DIAL NUMBER ENTRY
TURN THE XMIT OFF COLLECT #
2322
CH IN DATA MODE ?
YES
NO
2304
2305
DCC= STORED DCC?
NO
YES
IS DATA TIMER ON ?
YES
NO
2317
NO
NO
2310
V/C ASSIGNED ?
YES
2308
TUNE TO ASSIGNED VOICE CH.
2309
IS LINE IN USE ?
YES
SEND A 2 WORD RESPONSE
2307
2311
WAS 911 CALLED ?
YES
NO
V/C ASSIGNED ?
YES
2306
NO
YES
2319
NO
REORDER
1916
PICO-CELL ACCEPT MSG ?
NO
2318
WAS 911 CALLED ?
YES
LEAVE THE XMIT ON
2320
RESCAN
1402
CORDLESS CONVERSATION
2204

FIG. 23

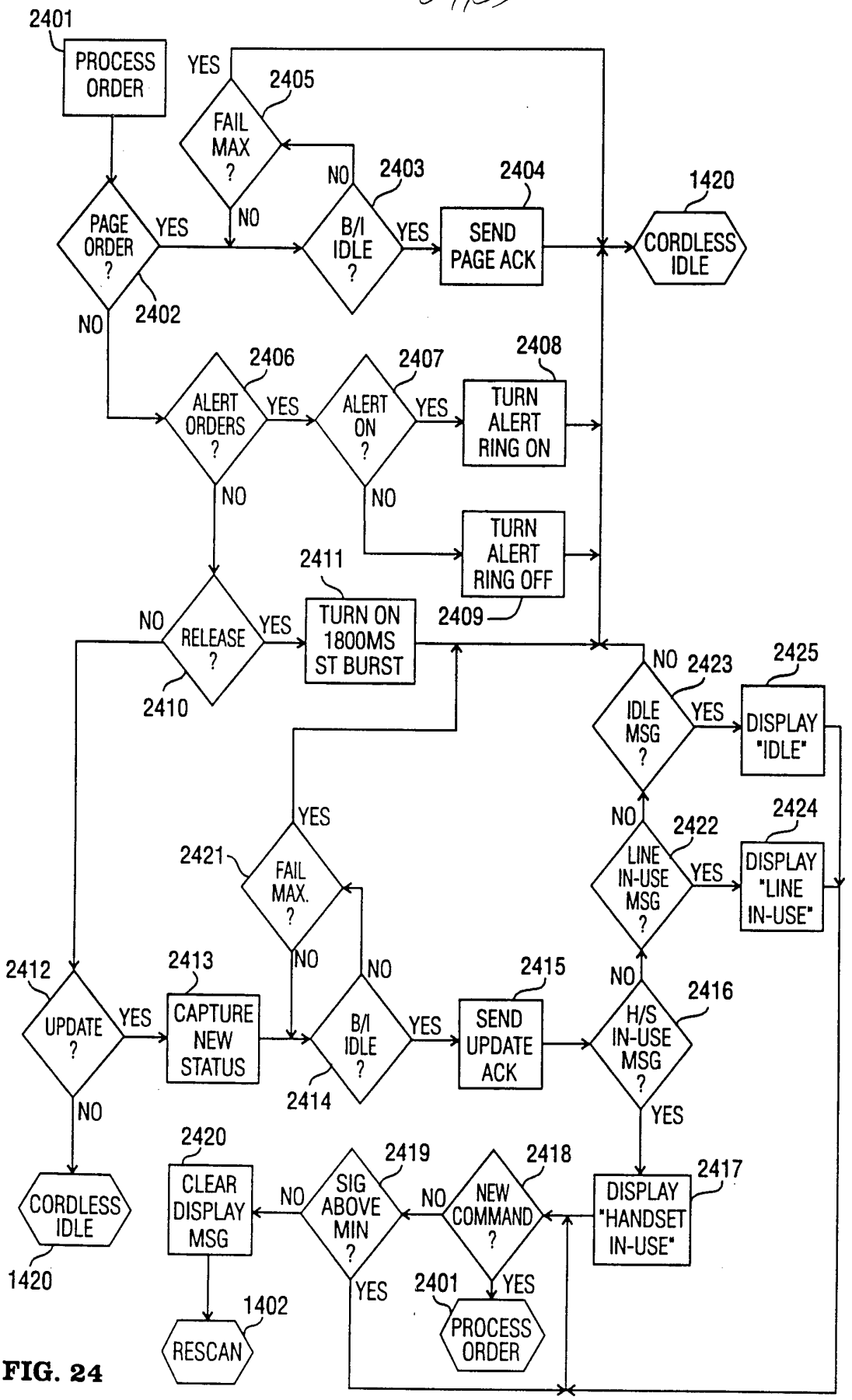
2401
PROCESS ORDER
YES
2405
FAIL MAX ?
NO
2403
B/I IDLE ?
YES
2404
SEND PAGE ACK
1420
CORDLESS IDLE
PAGE ORDER ?
YES
NO
2402
NO
2406
ALERT ORDERS ?
YES
2407
ALERT ON ?
YES
2408
TURN ALERT RING ON
NO
NO
TURN ALERT RING OFF
2409
2411
TURN ON 1800MS ST BURST
NO
RELEASE ?
YES
2410
NO
2423
IDLE MSG ?
YES
2425
DISPLAY "IDLE"
YES
2421
FAIL MAX. ?
NO
NO
2422
LINE IN-USE MSG ?
YES
2424
DISPLAY "LINE IN-USE"
2412
UPDATE ?
YES
2413
CAPTURE NEW STATUS
NO
B/I IDLE ?
YES
2414
2415
SEND UPDATE ACK
NO
2416
H/S IN-USE MSG ?
YES
NO
2420
CLEAR DISPLAY MSG
NO
2419
SIG ABOVE MIN ?
NO
2418
NEW COMMAND ?
2417
DISPLAY "HANDSET IN-USE"
CORDLESS IDLE
1420
YES
2401
YES
PROCESS ORDER
1402
RESCAN

FIG. 24

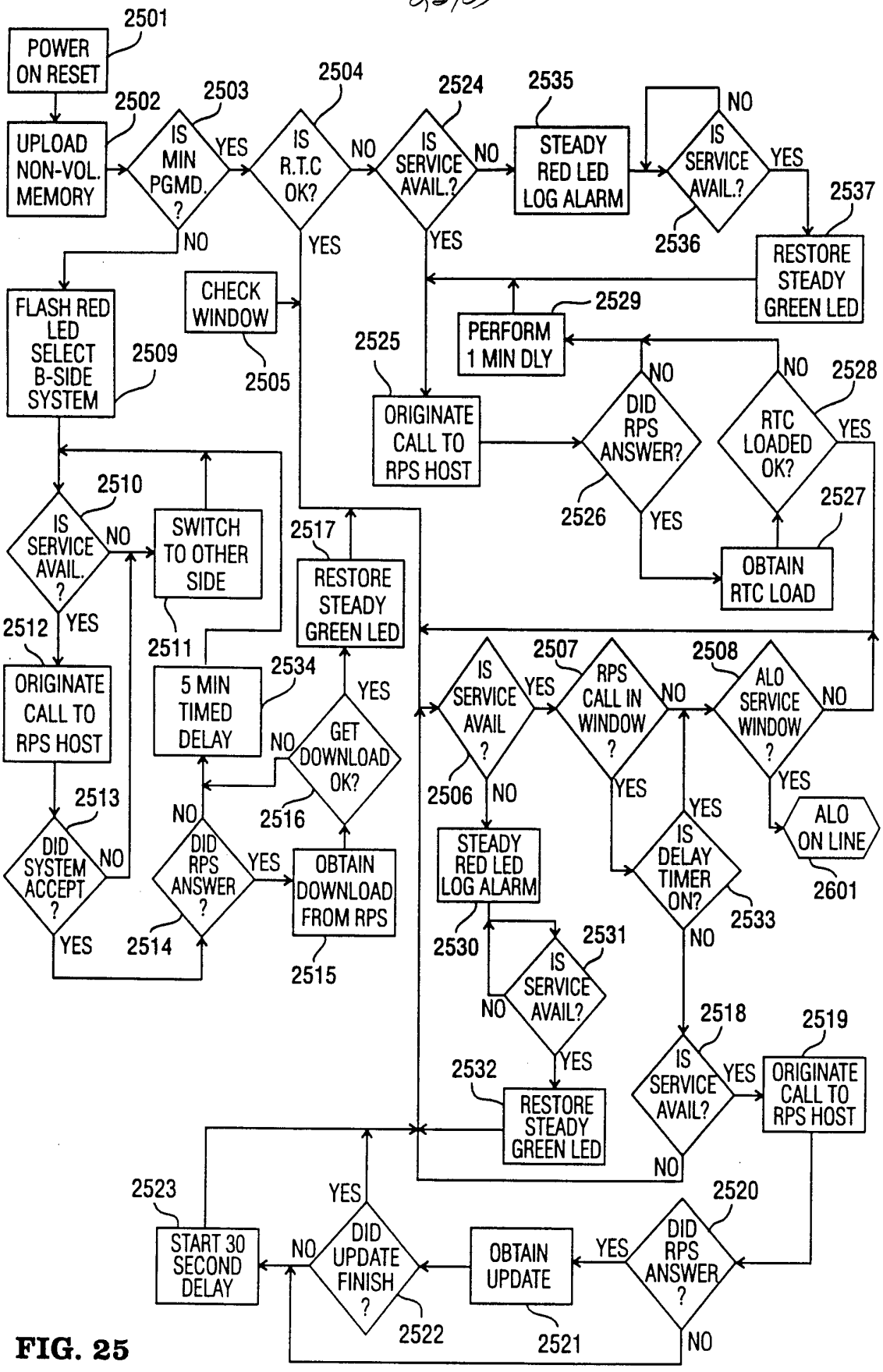
2501
POWER ON RESET
2502
UPLOAD NON-VOL. MEMORY
2503
IS MIN PGMD. ?
YES
NO
2504
IS R.T.C OK?
NO
YES
2524
IS SERVICE AVAIL.?
NO
YES
2535
STEADY RED LED LOG ALARM
NO
IS SERVICE AVAIL.?
YES
2536
2537
RESTORE STEADY GREEN LED
FLASH RED LED SELECT B-SIDE SYSTEM
2509
CHECK WINDOW
2505
2529
PERFORM 1 MIN DLY
2525
ORIGINATE CALL TO RPS HOST
NO
DID RPS ANSWER?
2526
YES
NO
2528
RTC LOADED OK?
YES
2527
OBTAIN RTC LOAD
2510
IS SERVICE AVAIL. ?
NO
SWITCH TO OTHER SIDE
2511
2517
RESTORE STEADY GREEN LED
2512
YES
ORIGINATE CALL TO RPS HOST
2513
DID SYSTEM ACCEPT ?
NO
YES
2514
5 MIN TIMED DELAY
2534
NO
GET DOWNLOAD OK?
YES
2516
NO
DID RPS ANSWER ?
YES
OBTAIN DOWNLOAD FROM RPS
2515
2507
IS SERVICE AVAIL ?
YES
2506
NO
RPS CALL IN WINDOW ?
NO
YES
2508
ALO SERVICE WINDOW ?
NO
YES
ALO ON LINE
2601
STEADY RED LED LOG ALARM
2530
2531
IS SERVICE AVAIL?
NO
YES
2532
RESTORE STEADY GREEN LED
YES
IS DELAY TIMER ON?
2533
NO
2518
IS SERVICE AVAIL?
YES
NO
2519
ORIGINATE CALL TO RPS HOST
2520
DID RPS ANSWER ?
YES
NO
OBTAIN UPDATE
2521
DID UPDATE FINISH ?
NO
YES
2522
START 30 SECOND DELAY
2523

FIG. 25

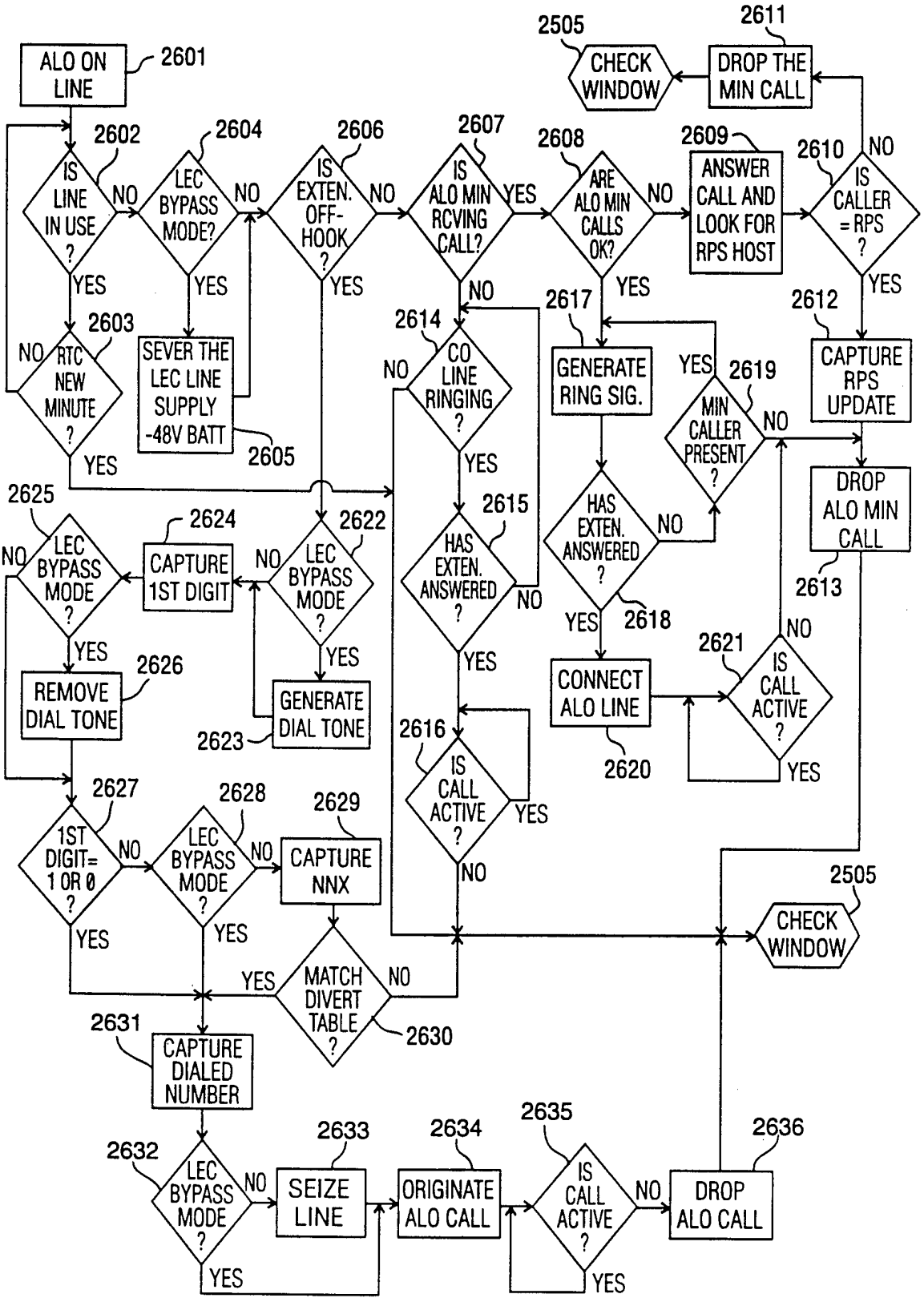
ALO ON LINE
2601
IS LINE IN USE ?
2602
LEC BYPASS MODE?
2604
IS EXTEN. OFF-HOOK ?
2606
IS ALO MIN RCVING CALL?
2607
ARE ALO MIN CALLS OK?
2608
ANSWER CALL AND LOOK FOR RPS HOST
2609
IS CALLER = RPS ?
2610
DROP THE MIN CALL
2611
CHECK WINDOW
2505
RTC NEW MINUTE ?
2603
SEVER THE LEC LINE SUPPLY -48V BATT
2605
CO LINE RINGING ?
2614
GENERATE RING SIG.
2617
MIN CALLER PRESENT ?
2619
CAPTURE RPS UPDATE
2612
DROP ALO MIN CALL
2613
HAS EXTEN. ANSWERED ?
2615
HAS EXTEN. ANSWERED ?
2618
CONNECT ALO LINE
2620
IS CALL ACTIVE ?
2621
IS CALL ACTIVE ?
2616
LEC BYPASS MODE ?
2622
CAPTURE 1ST DIGIT
2624
LEC BYPASS MODE ?
2625
GENERATE DIAL TONE
2623
REMOVE DIAL TONE
2626
1ST DIGIT= 1 OR 0 ?
2627
LEC BYPASS MODE ?
2628
CAPTURE NNX
2629
MATCH DIVERT TABLE ?
2630
CAPTURE DIALED NUMBER
2631
LEC BYPASS MODE ?
2632
SEIZE LINE
2633
ORIGINATE ALO CALL
2634
IS CALL ACTIVE ?
2635
DROP ALO CALL
2636
YES
NO

FIG. 26

27/33

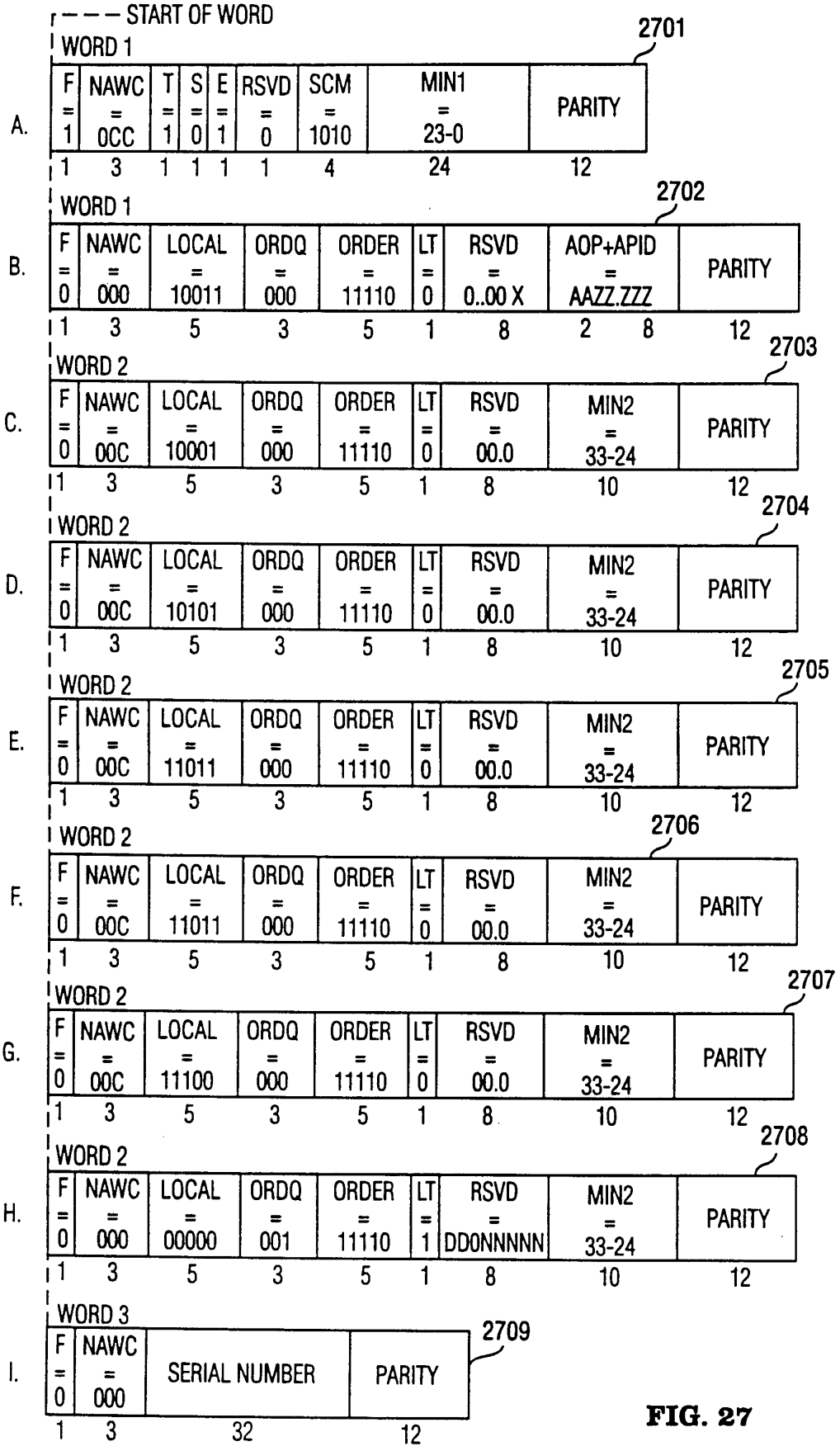
START OF WORD
A.
WORD 1
2701
F = 1 | NAWC = 0CC | T = 1 | S = 0 | E = 1 | RSVD = 0 | SCM = 1010 | MIN1 = 23-0 | PARITY
1 3 1 1 1 1 4 24 12
B.
WORD 1
2702
F = 0 | NAWC = 000 | LOCAL = 10011 | ORDQ = 000 | ORDER = 11110 | LT = 0 | RSVD = 0..00 X | AOP+APID = AAZZ.ZZZ | PARITY
1 3 5 3 5 1 8 2 8 12
C.
WORD 2
2703
F = 0 | NAWC = 00C | LOCAL = 10001 | ORDQ = 000 | ORDER = 11110 | LT = 0 | RSVD = 00.0 | MIN2 = 33-24 | PARITY
1 3 5 3 5 1 8 10 12
D.
WORD 2
2704
F = 0 | NAWC = 00C | LOCAL = 10101 | ORDQ = 000 | ORDER = 11110 | LT = 0 | RSVD = 00.0 | MIN2 = 33-24 | PARITY
1 3 5 3 5 1 8 10 12
E.
WORD 2
2705
F = 0 | NAWC = 00C | LOCAL = 11011 | ORDQ = 000 | ORDER = 11110 | LT = 0 | RSVD = 00.0 | MIN2 = 33-24 | PARITY
1 3 5 3 5 1 8 10 12
F.
WORD 2
2706
F = 0 | NAWC = 00C | LOCAL = 11011 | ORDQ = 000 | ORDER = 11110 | LT = 0 | RSVD = 00.0 | MIN2 = 33-24 | PARITY
1 3 5 3 5 1 8 10 12
G.
WORD 2
2707
F = 0 | NAWC = 00C | LOCAL = 11100 | ORDQ = 000 | ORDER = 11110 | LT = 0 | RSVD = 00.0 | MIN2 = 33-24 | PARITY
1 3 5 3 5 1 8 10 12
H.
WORD 2
2708
F = 0 | NAWC = 000 | LOCAL = 00000 | ORDQ = 001 | ORDER = 11110 | LT = 1 | RSVD = DD0NNNNN | MIN2 = 33-24 | PARITY
1 3 5 3 5 1 8 10 12
I.
WORD 3
2709
F = 0 | NAWC = 000 | SERIAL NUMBER | PARITY
1 3 32 12

FIG. 27

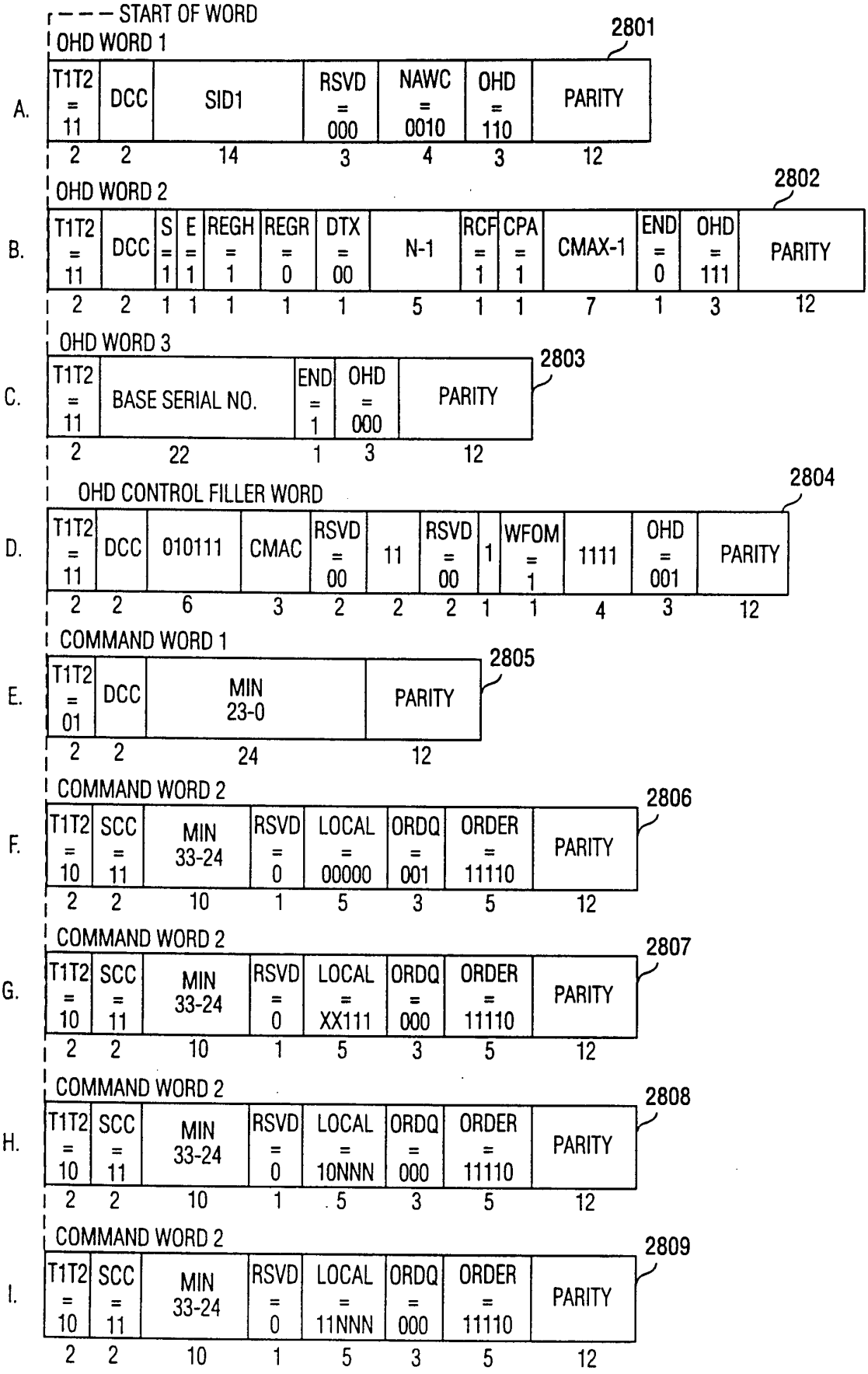
START OF WORD
A.
OHD WORD 1
2801
T1T2 = 11 | DCC | SID1 | RSVD = 000 | NAWC = 0010 | OHD = 110 | PARITY
2 2 14 3 4 3 12
B.
OHD WORD 2
2802
T1T2 = 11 | DCC | S = 1 | E = 1 | REGH = 1 | REGR = 0 | DTX = 00 | N-1 | RCF = 1 | CPA = 1 | CMAX-1 | END = 0 | OHD = 111 | PARITY
2 2 1 1 1 1 1 5 1 1 7 1 3 12
C.
OHD WORD 3
2803
T1T2 = 11 | BASE SERIAL NO. | END = 1 | OHD = 000 | PARITY
2 22 1 3 12
D.
OHD CONTROL FILLER WORD
2804
T1T2 = 11 | DCC | 010111 | CMAC | RSVD = 00 | 11 | RSVD = 00 | 1 | WFOM = 1 | 1111 | OHD = 001 | PARITY
2 2 6 3 2 2 2 1 1 4 3 12
E.
COMMAND WORD 1
2805
T1T2 = 01 | DCC | MIN 23-0 | PARITY
2 2 24 12
F.
COMMAND WORD 2
2806
T1T2 = 10 | SCC = 11 | MIN 33-24 | RSVD = 0 | LOCAL = 00000 | ORDQ = 001 | ORDER = 11110 | PARITY
2 2 10 1 5 3 5 12
G.
COMMAND WORD 2
2807
T1T2 = 10 | SCC = 11 | MIN 33-24 | RSVD = 0 | LOCAL = XX111 | ORDQ = 000 | ORDER = 11110 | PARITY
2 2 10 1 5 3 5 12
H.
COMMAND WORD 2
2808
T1T2 = 10 | SCC = 11 | MIN 33-24 | RSVD = 0 | LOCAL = 10NNN | ORDQ = 000 | ORDER = 11110 | PARITY
2 2 10 1 5 3 5 12
I.
COMMAND WORD 2
2809
T1T2 = 10 | SCC = 11 | MIN 33-24 | RSVD = 0 | LOCAL = 11NNN | ORDQ = 000 | ORDER = 11110 | PARITY
2 2 10 1 5 3 5 12

FIG. 28

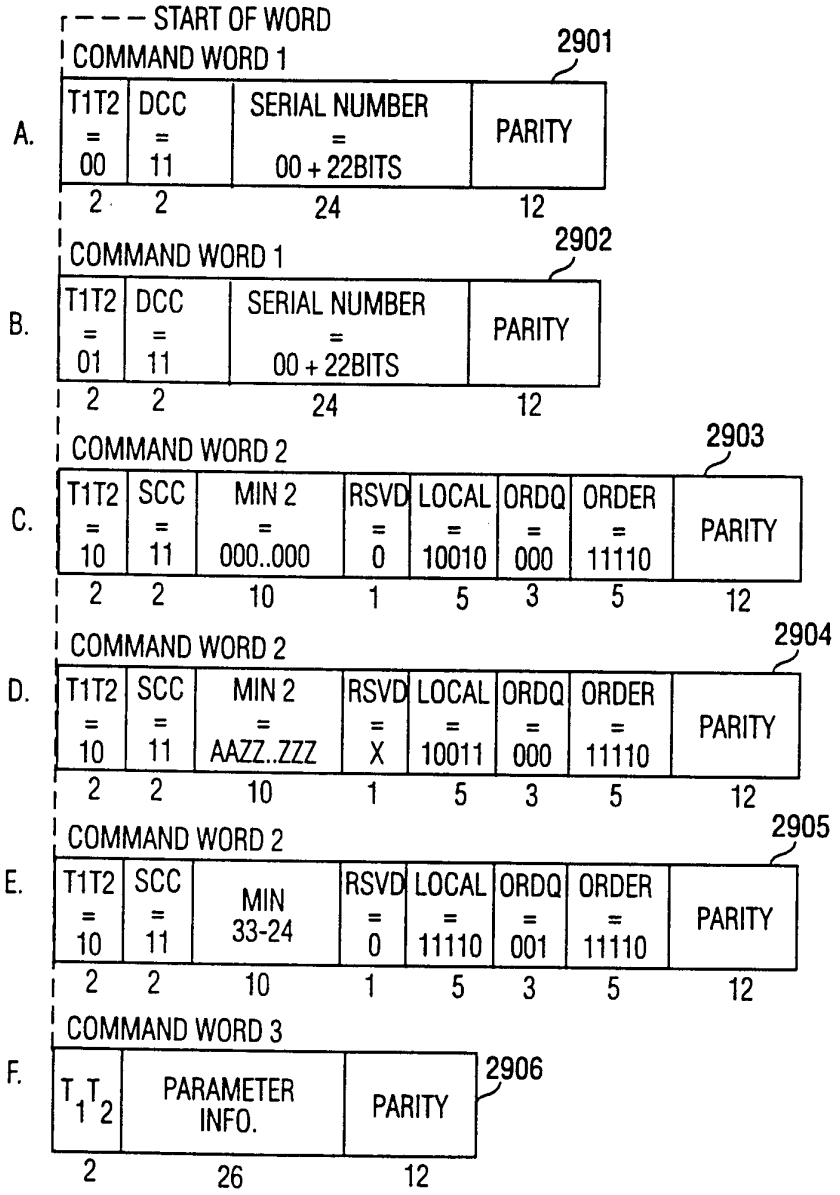
START OF WORD
COMMAND WORD 1
2901
A.
T1T2 = 00
DCC = 11
SERIAL NUMBER = 00 + 22BITS
PARITY
2 2 24 12
COMMAND WORD 1
2902
B.
T1T2 = 01
DCC = 11
SERIAL NUMBER = 00 + 22BITS
PARITY
2 2 24 12
COMMAND WORD 2
2903
C.
T1T2 = 10
SCC = 11
MIN 2 = 000..000
RSVD = 0
LOCAL = 10010
ORDQ = 000
ORDER = 11110
PARITY
2 2 10 1 5 3 5 12
COMMAND WORD 2
2904
D.
T1T2 = 10
SCC = 11
MIN 2 = AAZZ..ZZZ
RSVD = X
LOCAL = 10011
ORDQ = 000
ORDER = 11110
PARITY
2 2 10 1 5 3 5 12
COMMAND WORD 2
2905
E.
T1T2 = 10
SCC = 11
MIN 33-24
RSVD = 0
LOCAL = 11110
ORDQ = 001
ORDER = 11110
PARITY
2 2 10 1 5 3 5 12
COMMAND WORD 3
F.
T1T2
PARAMETER INFO.
2906
PARITY
2 26 12

FIG. 29

30/33

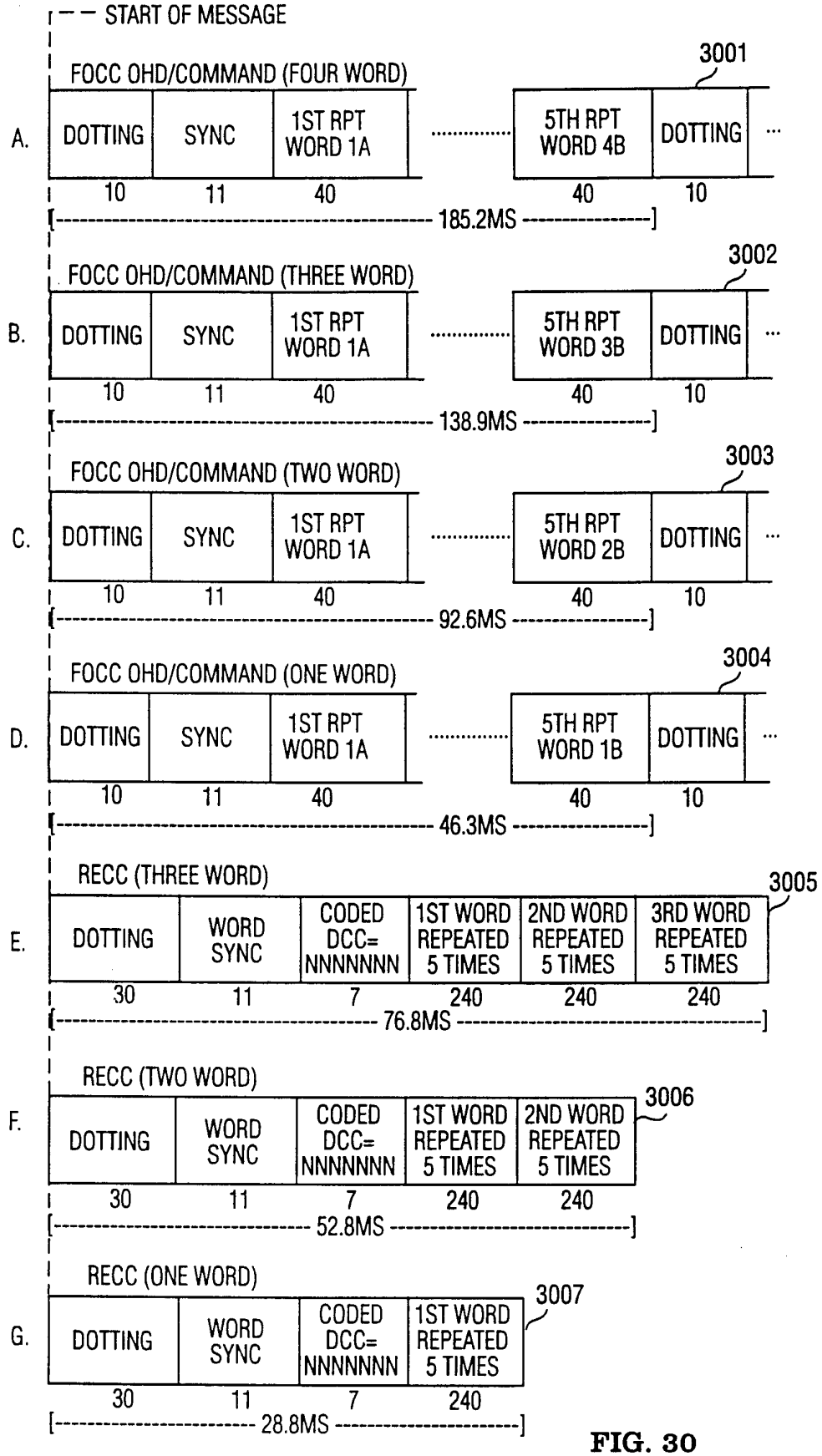
START OF MESSAGE
A.
FOCC OHD/COMMAND (FOUR WORD)
3001
DOTTING
SYNC
1ST RPT WORD 1A
5TH RPT WORD 4B
DOTTING
10
11
40
40
10
185.2MS
B.
FOCC OHD/COMMAND (THREE WORD)
3002
DOTTING
SYNC
1ST RPT WORD 1A
5TH RPT WORD 3B
DOTTING
10
11
40
40
10
138.9MS
C.
FOCC OHD/COMMAND (TWO WORD)
3003
DOTTING
SYNC
1ST RPT WORD 1A
5TH RPT WORD 2B
DOTTING
10
11
40
40
10
92.6MS
D.
FOCC OHD/COMMAND (ONE WORD)
3004
DOTTING
SYNC
1ST RPT WORD 1A
5TH RPT WORD 1B
DOTTING
10
11
40
40
10
46.3MS
E.
RECC (THREE WORD)
3005
DOTTING
WORD SYNC
CODED DCC= NNNNNNN
1ST WORD REPEATED 5 TIMES
2ND WORD REPEATED 5 TIMES
3RD WORD REPEATED 5 TIMES
30
11
7
240
240
240
76.8MS
F.
RECC (TWO WORD)
3006
DOTTING
WORD SYNC
CODED DCC= NNNNNNN
1ST WORD REPEATED 5 TIMES
2ND WORD REPEATED 5 TIMES
30
11
7
240
240
52.8MS
G.
RECC (ONE WORD)
3007
DOTTING
WORD SYNC
CODED DCC= NNNNNNN
1ST WORD REPEATED 5 TIMES
30
11
7
240
28.8MS

FIG. 30

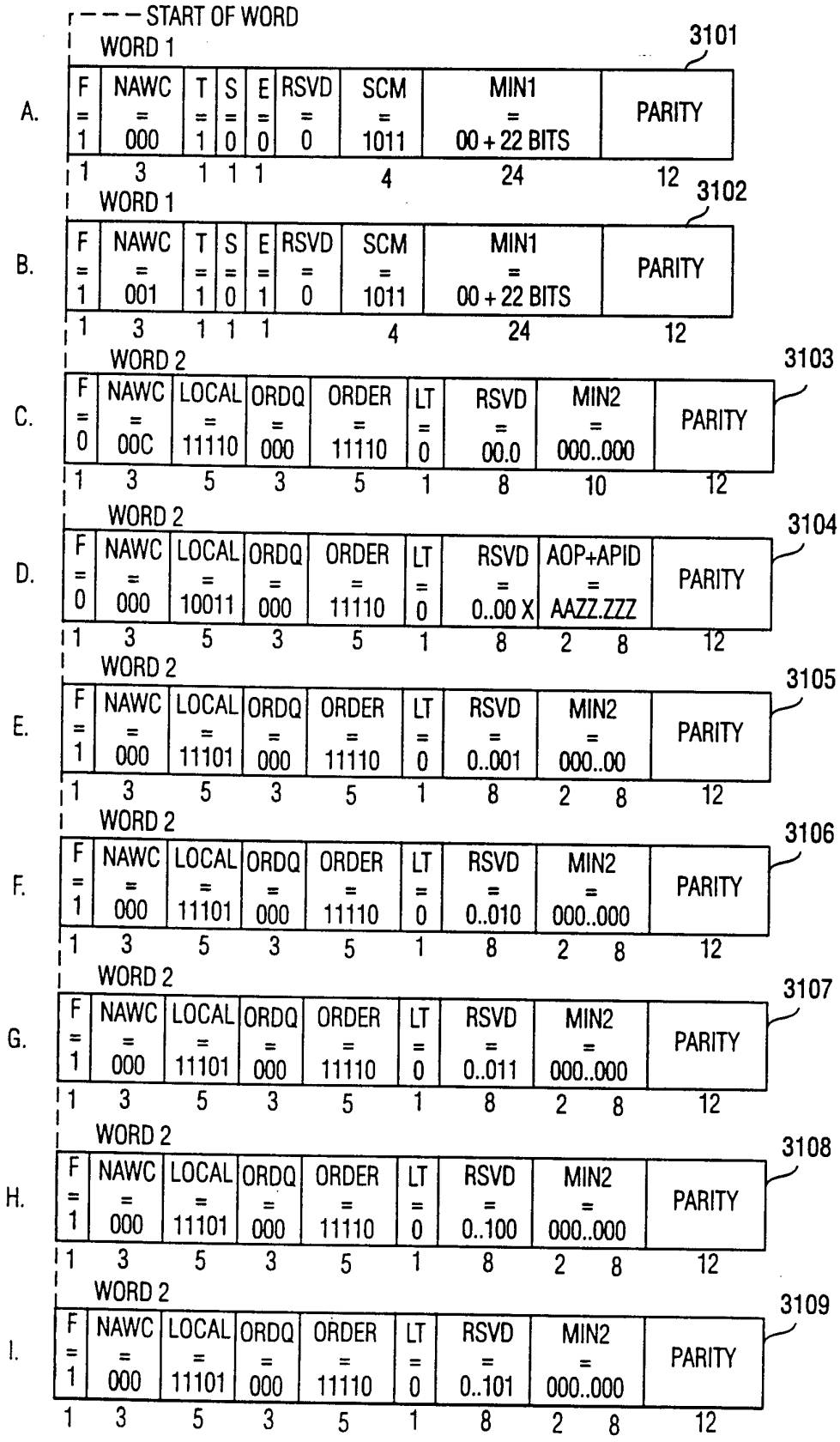
START OF WORD
A.
WORD 1
3101
F = 1 | NAWC = 000 | T = 1 | S = 0 | E = 0 | RSVD = 0 | SCM = 1011 | MIN1 = 00 + 22 BITS | PARITY
1 3 1 1 1 4 24 12
B.
WORD 1
3102
F = 1 | NAWC = 001 | T = 1 | S = 0 | E = 1 | RSVD = 0 | SCM = 1011 | MIN1 = 00 + 22 BITS | PARITY
1 3 1 1 1 4 24 12
C.
WORD 2
3103
F = 0 | NAWC = 00C | LOCAL = 11110 | ORDQ = 000 | ORDER = 11110 | LT = 0 | RSVD = 00.0 | MIN2 = 000..000 | PARITY
1 3 5 3 5 1 8 10 12
D.
WORD 2
3104
F = 0 | NAWC = 000 | LOCAL = 10011 | ORDQ = 000 | ORDER = 11110 | LT = 0 | RSVD = 0..00 X | AOP+APID = AAZZ.ZZZ | PARITY
1 3 5 3 5 1 8 2 8 12
E.
WORD 2
3105
F = 1 | NAWC = 000 | LOCAL = 11101 | ORDQ = 000 | ORDER = 11110 | LT = 0 | RSVD = 0..001 | MIN2 = 000..00 | PARITY
1 3 5 3 5 1 8 2 8 12
F.
WORD 2
3106
F = 1 | NAWC = 000 | LOCAL = 11101 | ORDQ = 000 | ORDER = 11110 | LT = 0 | RSVD = 0..010 | MIN2 = 000..000 | PARITY
1 3 5 3 5 1 8 2 8 12
G.
WORD 2
3107
F = 1 | NAWC = 000 | LOCAL = 11101 | ORDQ = 000 | ORDER = 11110 | LT = 0 | RSVD = 0..011 | MIN2 = 000..000 | PARITY
1 3 5 3 5 1 8 2 8 12
H.
WORD 2
3108
F = 1 | NAWC = 000 | LOCAL = 11101 | ORDQ = 000 | ORDER = 11110 | LT = 0 | RSVD = 0..100 | MIN2 = 000..000 | PARITY
1 3 5 3 5 1 8 2 8 12
I.
WORD 2
3109
F = 1 | NAWC = 000 | LOCAL = 11101 | ORDQ = 000 | ORDER = 11110 | LT = 0 | RSVD = 0..101 | MIN2 = 000..000 | PARITY
1 3 5 3 5 1 8 2 8 12

FIG. 31

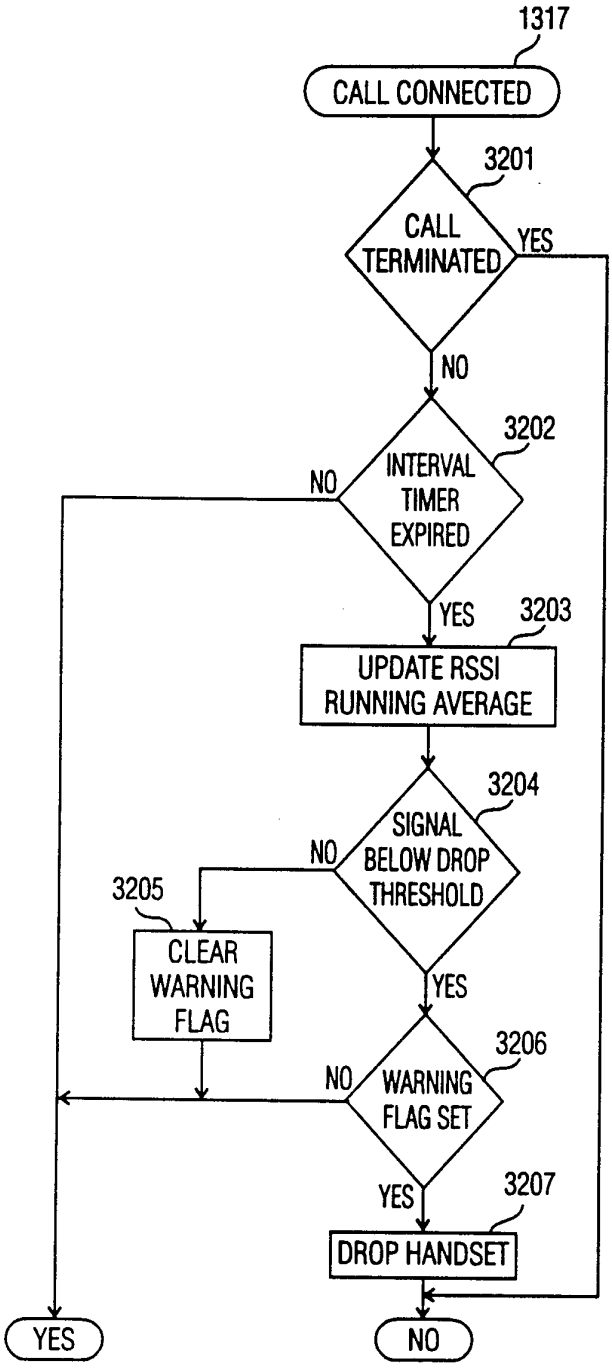
1317
CALL CONNECTED
3201
CALL TERMINATED
YES
NO
3202
INTERVAL TIMER EXPIRED
NO
YES
3203
UPDATE RSSI RUNNING AVERAGE
3204
SIGNAL BELOW DROP THRESHOLD
NO
3205
CLEAR WARNING FLAG
YES
3206
WARNING FLAG SET
NO
YES
3207
DROP HANDSET
YES
NO

FIG. 32

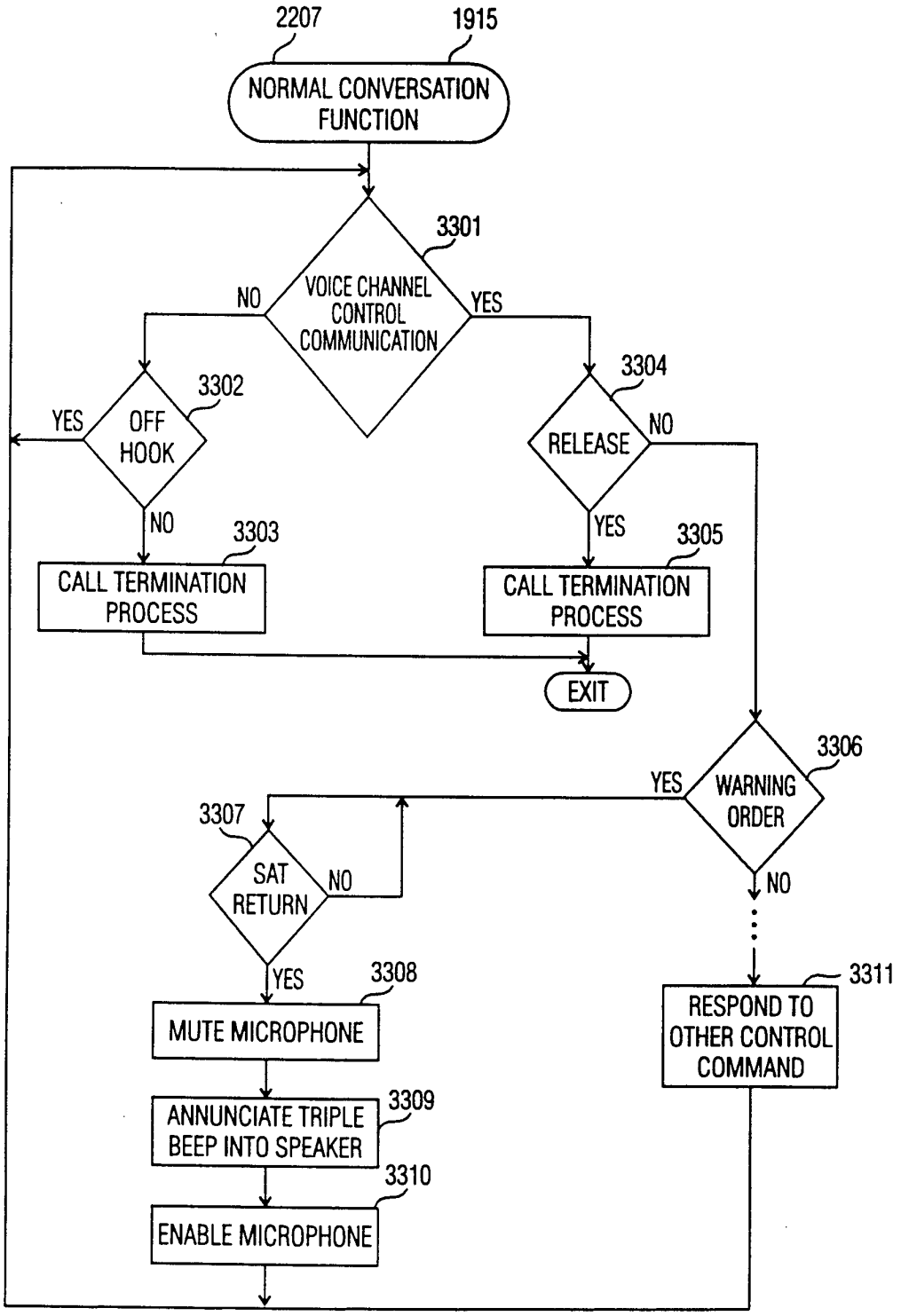
2207
1915
NORMAL CONVERSATION FUNCTION
3301
VOICE CHANNEL CONTROL COMMUNICATION
NO
YES
3302
OFF HOOK
YES
NO
3303
CALL TERMINATION PROCESS
3304
RELEASE
NO
YES
3305
CALL TERMINATION PROCESS
EXIT
3306
WARNING ORDER
YES
NO
3307
SAT RETURN
NO
YES
3308
MUTE MICROPHONE
3309
ANNUNCIATE TRIPLE BEEP INTO SPEAKER
3310
ENABLE MICROPHONE
3311
RESPOND TO OTHER CONTROL COMMAND

FIG. 33

INTERNATIONAL SEARCH REPORT

International application No.
PCT/US95/01373

A. CLASSIFICATION OF SUBJECT MATTER

IPC(6) :H04Q 7/22; H04M 11/00
US CL :379/63
According to International Patent Classification (IPC) or to both national classification and IPC

B. FIELDS SEARCHED

Minimum documentation searched (classification system followed by classification symbols)

U.S. : 379/63, 58, 59, 60, 61; 455/33.1, 33.2, 54.1, 56.1

Documentation searched other than minimum documentation to the extent that such documents are included in the fields searched

Electronic data base consulted during the international search (name of data base and, where practicable, search terms used)

C. DOCUMENTS CONSIDERED TO BE RELEVANT

Category*	Citation of document, with indication, where appropriate, of the relevant passages	Relevant to claim No.
X --- Y	US, A, 4,989,230 (GILLIG et al) 29 January 1991, see entire document.	1-11, 16 --- 12-15, 17-20
Y	US, A, 4,768,218 (YORITA) 30 August 1988, see col. 4, line35 to col. 6, line 53.	34
X --- Y	US, A, 4,939,766 (UMEMOTO et al) 03 July 1990, see col. 6, line 67 to col. 8, line 23.	28 --- 29-33
Y,P	US, A, 5,297,192 (GERSZBERG) 22 March 1994, see entire document.	21-27

☐ Further documents are listed in the continuation of Box C. ☐ See patent family annex.

*	Special categories of cited documents:	"T"	later document published after the international filing date or priority date and not in conflict with the application but cited to understand the principle or theory underlying the invention
"A"	document defining the general state of the art which is not considered to be part of particular relevance	"X"	document of particular relevance; the claimed invention cannot be considered novel or cannot be considered to involve an inventive step when the document is taken alone
"E"	earlier document published on or after the international filing date	"Y"	document of particular relevance; the claimed invention cannot be considered to involve an inventive step when the document is combined with one or more other such documents, such combination being obvious to a person skilled in the art
"L"	document which may throw doubts on priority claim(s) or which is cited to establish the publication date of another citation or other special reason (as specified)	"&"	document member of the same patent family
"O"	document referring to an oral disclosure, use, exhibition or other means		
"P"	document published prior to the international filing date but later than the priority date claimed		

Date of the actual completion of the international search 03 MAY 1995	Date of mailing of the international search report 13 JUN 1995
Name and mailing address of the ISA/US Commissioner of Patents and Trademarks Box PCT Washington, D.C. 20231 Facsimile No. (703) 305-3230	Authorized officer George Oehling Telephone No. (703) 305-4835

Form PCT/ISA/210 (second sheet)(July 1992)*