Office de la Propriété Intellectuelle du Canada
Un organisme d'Industrie Canada

Canadian Intellectual Property Office
An agency of Industry Canada

CA 2470657 C 2010/09/28

(11)(21) **2 470 657**

(12) **BREVET CANADIEN**
CANADIAN PATENT

(13) **C**

(86) Date de dépôt PCT/PCT Filing Date: 2002/11/07
(87) Date publication PCT/PCT Publication Date: 2003/07/24
(45) Date de délivrance/Issue Date: 2010/09/28
(85) Entrée phase nationale/National Entry: 2004/06/16
(86) N° demande PCT/PCT Application No.: CA 2002/001702
(87) N° publication PCT/PCT Publication No.: 2003/060322
(30) Priorité/Priority: 2001/12/27 (US10/034,054)

(51) Cl.Int./Int.Cl. *F04B 17/00* (2006.01)
(72) Inventeur/Inventor:
DOOLEY, KEVIN, CA

(73) Propriétaire/Owner:
PRATT & WHITNEY CANADA CORP., CA

(74) Agent: OGILVY RENAULT LLP/S.E.N.C.R.L.,S.R.L.

(54) Titre : POMPE MAGNETOSTRICTIVE A CHAMBRES DE POMPAGE MULTIPLES
(54) Title: MULTI PUMPING CHAMBER MAGNETOSTRICTIVE PUMP

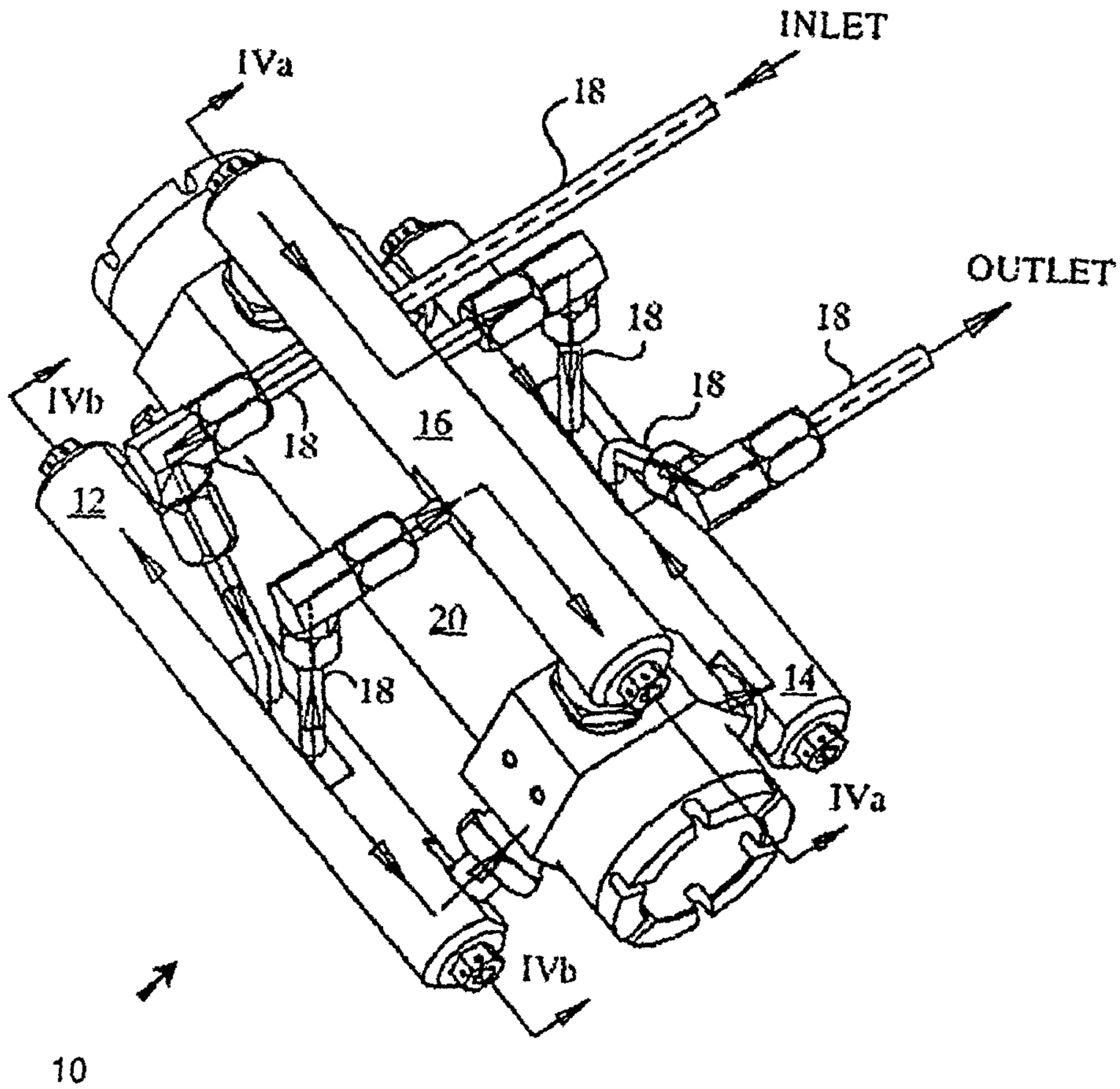

(57) Abrégé/Abstract:
A positive displacement pump includes a magnetostrictive actuator. A single actuator drives multiple pumping chambers. The pump may include two pumping chambers driven in phase by the linear expansion of the actuator at both its ends. The pump may

(57) Abrégé(suite)/Abstract(continued):
include a third pumping cavity, driven by the transverse expansion and contraction of the actuator, out of phase with either cavity driven by the lengthwise extension of the actuator. A pump assembly having multiple pumps each including a magnetostrictive element is also disclosed.

(12) INTERNATIONAL APPLICATION PUBLISHED UNDER THE PATENT COOPERATION TREATY (PCT)

(19) World Intellectual Property Organization
International Bureau

(43) International Publication Date
24 July 2003 (24.07.2003)

PCT

(10) International Publication Number
WO 03/060322 A1

(51) International Patent Classification[7]: F04B 17/00

(21) International Application Number: PCT/CA02/01702

(22) International Filing Date:
7 November 2002 (07.11.2002)

(25) Filing Language: English

(26) Publication Language: English

(30) Priority Data:
10/034,054 27 December 2001 (27.12.2001) US

(71) Applicant: PRATT & WHITNEY CANADA CORP. [CA/CA]; c/o Todd D. Bailey, Legal Services (01BE5), 1000 Marie Victorin, Longueuil, Québec J4G 1A1 (CA).

(72) Inventor: DOOLEY, Kevin; 2605 Woodchester Drive Unit 45, Mississauga, Ontario L5K 2E3 (CA).

(74) Agent: BAILEY, Todd, D.; Pratt & Whitney Canada Corp., Legal Dept. (01BE5), 1000 Marie Victorin, Longueuil, Québec J4G 1A1 (CA).

(81) Designated States *(national)*: CA, CN, JP, KR.

(84) Designated States *(regional)*: European patent (AT, BE, BG, CH, CY, CZ, DE, DK, EE, ES, FI, FR, GB, GR, IE, IT, LU, MC, NL, PT, SE, SK, TR).

Published:
— *with international search report*

For two-letter codes and other abbreviations, refer to the "Guidance Notes on Codes and Abbreviations" appearing at the beginning of each regular issue of the PCT Gazette.

(54) Title: MULTI PUMPING CHAMBER MAGNETOSTRICTIVE PUMP

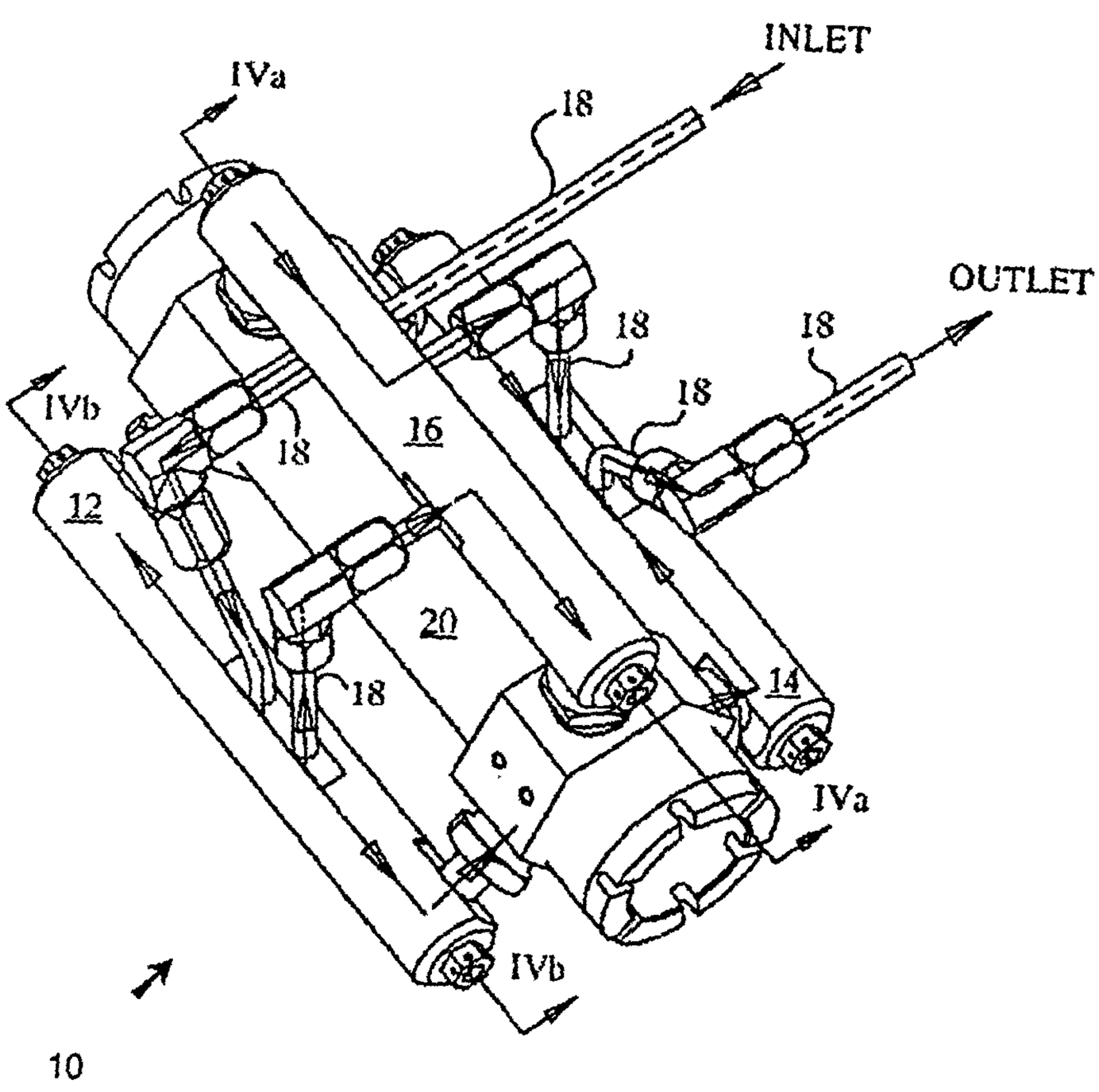

(57) Abstract: A positive displacement pump includes a magnetostrictive actuator. A single actuator drives multiple pumping chambers. The pump may include two pumping chambers driven in phase by the linear expansion of the actuator at both its ends. The pump may include a third pumping cavity, driven by the transverse expansion and contraction of the actuator, out of phase with either cavity driven by the lengthwise extension of the actuator. A pump assembly having multiple pumps each including a magnetostrictive element is also disclosed.

WO 03/060322 A1

MULTI PUMPING CHAMBER MAGNETOSTRICTIVE PUMP

FIELD OF THE INVENTION

[0001] The present invention relates generally to pumps, and more particularly to pumps making use of magnetostrictive actuators.

BACKGROUND OF THE INVENTION

[0002] Conventional positive displacement pumps pump liquids in and out of a pumping chamber by changing the volume of the chamber. Many pumps are bulky with many moving parts, and are driven by a periodic mechanical source of power, such as a motor or engine. Often such pumps require mechanical linkages, including gearboxes, for interconnection to a suitable source of power.

[0003] Other types pumps, as for example disclosed in US Patent No. **5,641,270**; and German Patent Publication Nos. DE **4032555A1** and DE **19536491A1** use an actuator made of a magnetostrictive material. As will be appreciated, magnetostrictive material change dimensions in the presence of a magnetic field. Numerous magnetostrictive materials are known. For example, European Patent Application No. **923009280** discloses many such materials. A commercially available magnetostrictive material is sold in association with the trademark Terfenol-D by Etrema Corporation, of Ames, Iowa.

[0004] These magnetostrictive pumps rely on the expansion

and contraction of a magnetostrictive element to compress a pumping chamber. Known magnetostrictive pumps however compress a single pumping chamber. As such, these pumps produce a single pumping compression stroke for each cycle of contraction and expansion of the magnetostrictive material. This, in turn, may result in significant pressure fluctuations in the pumped fluid. The flow rate is similarly limited to the displacement of the single pumping chamber. Moreover, pumps with a single actuator may be mechanically imbalanced and thereby prone to mechanical noise and vibration as the single actuator expands and contracts.

[0005] In certain applications, constant pressures and high flow rates per unit weight of a pump are critical. For instance, in fuel delivery systems in aircrafts, pump designs strive to achieve low pump weight to fuel delivery ratios, while still providing for smooth fuel delivery.

[0006] Accordingly, an improved magnetostrictive pump facilitating high flow rates, and smooth fluid delivery would be desirable.

SUMMARY OF THE INVENTION

[0007] In accordance with the present invention, a pump includes a magnetostrictive element, and multiple pumping chambers all driven by this magnetostrictive element. The pumping chambers may pump fluid in or out of phase with each other.

[0008] Conveniently, a pump having multiple pumping

chambers may provide for smoother fluid flow, less pump vibration, and increased flow rates.

[0009] In accordance with one aspect of the present invention, a pump includes an actuator formed of a magnetostrictive material susceptible to changes in physical dimensions in the presence of a magnetic field; and first and second pumping chambers coupled to the magnetostrictive element to vary in volume as the magnetostrictive element changes shape.

[0010] In accordance with another aspect of the present invention, a pump includes a housing defining a cylindrical cavity; a cylindrical actuator formed of magnetostrictive material, within the housing and coaxial therewith; first and second pumping chambers within the housing at opposite ends of a lengthwise extent of the magnetostrictive element. Each of the pumping chambers is mechanically coupled to the actuator, to compress as the actuator extends in length.

[0011] In accordance with yet a further aspect of the present invention, a method of pumping fluid using a magnetostrictive element includes, applying a magnetic field to a magnetostrictive element to cause lengthwise extension of the element at two opposing ends; driving a first pumping chamber through the extension of a first end of the two opposing ends; and driving a second pumping chamber through the extension of a second of the two opposing ends, opposite the first end. Thus, the first pumping chamber is driven in phase with the second pumping chamber.

[0012] Other aspects and features of the present

invention will become apparent to those of ordinary skill in the art upon review of the following description of specific embodiments of the invention in conjunction with the accompanying figures.

BRIEF DESCRIPTION OF THE DRAWINGS

[0013] In the figures which illustrate by way of example only, embodiments of this invention:

[0014] **FIG. 1** is a left perspective view of a pump exemplary of an embodiment of the present invention;

[0015] **FIG. 2** is a right perspective view of a pump body of the pump of **FIG. 1**;

[0016] **FIG. 3** is an exploded view of the pump body of **FIG. 2**;

[0017] **FIG. 4A** is a cross sectional view of a component of the pump of **FIG. 1** taken across lines IVa - IVa;

[0018] **FIG. 4B** is a cross sectional of a further component of the pump of **FIG. 1** taken across lines IVb - IVb;

[0019] **FIG. 5A** is a right perspective cut away view of the pump body of **FIG. 2** along lines V-V;

[0020] **FIG. 5B** is a right elevational view of **FIG. 5A**;

[0021] **FIG. 6A** is a further right perspective cut away view of the pumping body of **FIG. 2**;

[0022] **FIG. 6B** is a top plan view of **FIG. 6A**;

[0023] **FIGS. 7A** and **7B** are enlarged sectional views of a portion of the pump body of **FIG. 2**;

[0024] **FIGS. 8** and **9** are schematic diagrams illustrating the pump of **FIG. 1** in operation; and

[0025] **FIG. 10** illustrates a multi pump assembly exemplary of another embodiment of the present invention.

DETAILED DESCRIPTION

[0026] **FIG. 1** illustrates a pump **10** exemplary of an embodiment of the present invention. Pump **10** is well suited to pump fluids at high flow rates and high pressures. Pump **10** includes few moving parts and is relatively lightweight. It is well suited for use in fuel delivery systems and in particular for use in aircraft engines.

[0027] As illustrated pump **10** includes a single inlet and outlet. As will become apparent, pump **10** includes three individual pumping chambers housed with a pump body **20**. An input manifold **12** distributes a single input to the three chambers. An output manifold **14** combines outputs of the three chambers. A cylindrical connecting pipe **16** interconnects pumping chambers. Pipes **18** interconnect pipe chambers to manifolds **12** and **14**, and connecting pipe **16** for fluid coupling as illustrated by the arrows in **FIG. 1**.

[0028] The exterior of pump body **20** is more particularly illustrated in **FIG. 2**. As illustrated pump body **20** includes an outer housing **22** that is generally

cylindrical in shape. At its ends housing **22** is capped by threaded clamps **30a** and **30b**. Three one way flow valves **24a**, **26a**, **28a** near one end of body **20**, and three further one way flow valves **24b**, **26b**, **28b** provide flow communication to three separate pumping chambers within pump body **20**. As illustrated, in the exemplary embodiment three valves **24a**, **26a**, and **28a** are spaced at **120°** about the periphery of housing **22**, and extend in a generally radial direction from the center axis of housing **22**. Valves **24b**, **26b** and **28b** are similarly situated near the opposite end of housing **22**.

[0029] **FIG. 3** is an exploded view of pump body **20**, illustrating its assembly. **FIGS. 5A**, **5B** and **6B** are sectional views further illustrating this assembly. As illustrated, pump body **20** includes a lengthwise extending actuator **32**. Preferably actuator **32** is cylindrical in shape. A multi-turn conducting coil **36** surrounds actuator **32** exterior to ceramic sheath **34**. Radially exterior to coil **36** is a further cylindrical sheath **38**. Exterior to sheath **34** is outer housing **22**. Actuator **32**, ceramic sheath **34**, coil **36**, sheath **38** and outer housing **22** are coaxial with a central axis of pump body **20**.

[0030] Sheath **38** is preferably formed of a low conductivity soft magnetic material. It may for example be made of ferrite or from laminated or thin film rolled magnetic steel. In the exemplary embodiment, sheath **38** is made from a material made available in association with the trademark SM**2** by MII Technologies. Valve seats **40**a and **40**b are similarly preferably formed of a magnetic material.

[0031] Sheath **38** and valve seats **40**a and **40**b are preferably formed of a magnetic material, as these at least partially define a magnetic circuit about actuator **32**. The choice of materials affects magnetic losses (such as hysteresis and eddy-current losses) in these components.

[0032] Housing **22** is preferably made from a non-magnetic metal such as aluminum, stainless steel, or from a ceramic.

[0033] In the example embodiment, coil **36** is formed from about sixty two (**62**) turns of **15** awg wire. Of course, the number of turns and gauge of coil **36** is governed by its operating voltage, frequency and magnetic requirements (current).

[0034] As best illustrated in **FIGS. 5A** and **5B**, actuator **32** is held in its axial position within outer housing **22** at its one end as a result of threaded clamp **30**a providing an inward axial load on actuator **32** by way of a spacer **39**a, valve housing **40**a and spacer rings **42**a and **44a**. At its other end, actuator **32** is held in its axial position as a result of threaded clamp **30b** providing an inward axial load on actuator **32** by way of a spacer **39b**, valve housing **40b** and spacer rings **42b** and **44b**. Spacers **39a** and **39b** are generally disk shaped washers formed of a somewhat resilient material, such as a polymer sold in association with the trademark Vespel. Retaining rings **42a** and **44a** (and **42b** and **44b**) are annular nested rings with ring **42**a having a smaller diameter than ring **44a**. The outer diameter of ring **42**a is about equal to the diameter of actuator **32**. Rings **42a**, **42b**, **44**a, and **44**b,

too, are preferably formed of Vespel.

[0035] The spacer rings **44a** and **44b** serve three functions. First, spacer rings **44a** and **44b** act as load springs to provide an axial pre-load to actuator **32**. Second, they form a seal at each end of the spacer **44a** and **44b**. Thirdly, they partially define pumping chambers **72a** and **72b**, as detailed below.

[0036] Spacer rings **42**a and **42**b similarly serve three functions. First, they provide radial support to actuator **32** to center it coaxial with cylinder **34**. Secondly, rings **42**a and **42**b seal an annular compression chamber **74**, at valve seats **40**a and **40**b and sheath **34**. Thirdly, an annular manifold for the annular chamber is formed by the space between the rings **42**a and **44**b (and rings **42**b and **44**b).

[0037] The thickness of spacers **39a** and **39b** are chosen so that when the clamps **30**a and **30**b provide the required axial load on actuator **32** as clamps **30**a and **30**b are tightened completely to their mechanical stop. Essentially they are also used as springs. Conveniently spacers **39a** and **39b** also provide an insulated hole through which leads to coil **36** may be passed. Spacers **39a** and **39b** could of course, be replaced by a suitable washer.

[0038] Valve housings **40a** and **40b** seat valves **24**a, **26**a, **28a** and **24b**, **26b**, **28b** and provide flow communication between these valves and pumping chambers, as described below.

[0039] In the described embodiment of pump **10**, actuator

32 has about a **0.787**" diameter and a **4.00**" length. Sheath **38** has **1.740**" outside diameter, and a **1.560**" inside diameter. Housing **22** has a total length of about **8.470**". Sheath **34** has an inner diameter of about **.797**" and is about **4.350** in length.

[0040] Valves **24**a **24**b, **26**a, **26**b, **28**a and **28**b are conventional high speed check valves preventing flow into associated pumping chambers, capable of operating at about **2.5** KHz. These valves may, for example, be conventional Reed valves. The pressure drop required to open valves **24**a **24**b, **26**a, **26**b, **28**a and **28**b is preferably less than one (**1**) psi and the withstanding pressure (in the opposite direction) is over **2000** psi.

[0041] Exemplary manifolds **12** and **14** (**FIG. 1**) are identical in structure illustrated in cross-section in **FIG. 4B**. Manifold **12** acts as an intake manifold and is thus interconnected with inlet valves **24a** and **28a**. Manifold **14** acts as an output manifold, and is thus interconnected to outlet valves **24b** and **28b**. As illustrated in **FIG. 4B**, manifolds **12** and **14** each include an axial passageway **50** connecting two openings **52a** and **52b** in a cylindrical body **54**, near its ends. Passageway **50** provides flow communication between these openings **52a**, **52b**. Openings **52a** and **52b** are spaced for interconnection between valves **24a** an **24b** or valves **28a** and **28b** (**FIG. 1**). Additional openings **56** permit interconnection of pipes **18** to passageway **50**. Preferably, manifolds **12** and **14** are machined from a hard material such a metal (e.g. stainless steel, brass, copper, etc.).

[0042] Exemplary pipe **16** is similarly illustrated in cross section in **FIG. 4A**. As illustrated, pipe **16**, includes two axial passageways **60a** and **60b** within an outer, generally cylindrical body **58**. Each passageway interconnects and opening **64a** or **64b** for interconnection with valves **26**a and **26**b (**FIG. 1**). Two additional openings **66** (only one shown) are spaced **90°** from each other about the central axis of cylindrical body **58**. Openings **66** allow interconnection of pipes **18** (**FIG. 1**) for flow communication with one of passageways **60**a and **60**b. Pipe **16** may be machined in a manner, and from a material similar to manifolds **12** and **14**.

[0043] Pumping chambers within pumping body **20** are more particularly illustrated in **FIGS. 5A**, **5B**, **6A** and **6B**. **FIGS. 5A** and **6A** are sectional views of pump body **20**, illustrating its three pumping chambers **72a**, **72b** and **74**. **FIG. 5B** is a right elevational view of **FIG. 5A** (and therefore a cross-sectional view of pump body **20**). **FIG. 6B** is a top plan view of **FIG. 6A**. As illustrated, two end pumping chambers **72a** and **72b** are generally cylindrical in shape, and are located at distal ends of the lengthwise extent of actuator **32**. Preferably, they are located directly between valve housing **40a** and actuator **32**, and valve housing **40b** and actuator **32**, respectively. They are defined in part by opposite flat ends of actuator **32** and flat ends of valve housing **40a** and **40b**. A further axial pumping chamber **74** is located between the exterior round surface of actuator **32**, and an interior cylindrical surface of sheath **34**. Axial pumping chamber **74** extends axially along the length of actuator **32**, and is sealed at its ends by rings **42a** and **42b**.

[0044] As illustrated in **FIGS. 5A** and **5B**, axial pumping chamber **74** is in flow communication with valves **26a** and **26b**, by way of passageways **76a** and **76b** formed in valve housings **40a** and **40b**. Valve housing **40b** is identical to housing **40a** and is illustrated more particularly in **FIG. 7A**. As illustrated an annulus between rings **42b** and **44b** isolates end chamber **72b** from axial chamber **74** and further provides flow communication from chamber **74** through passageway **76b** to valve **26b**. As will become apparent, fluid may thus be pumped from valve **26a** through chamber **74** and out of valve **26b**.

[0045] Cylindrical chamber **72b** is in flow communication with valves **24b** and **28b**, by way of passageways **78b** formed within valve housing **40b**. As such, valve **24b** and valve **28b** act as inlet and outlet valves for end pumping chamber **72b**. Valves **24a** and **28a** similarly serve as inlet and outlet valves, respectively, for pumping chamber **72a**, as illustrated in **FIG. 6A** and **6B**.

[0046] Actuator **32** is preferably a cylindrical rod, formed of a conventional magnetostrictive material such as Terfonol-D (an alloy containing iron and the rare earth metals turbium and dysprosium). As understood by those of ordinary skill, magnetostrictive materials change shape in the presence of a magnetic field, while, for all practical purposes, retaining their volume. Actuator **32**, in particular, expands and contracts in a direction along its length and radius in the presence and absence of a magnetic field.

[0047] Rings **38** loaded by the force of threaded clamps **30a** and **30b** compress actuator **32** so that in the absence

of a magnetic field, actuator **32** is contracted lengthwise. In the presence of a magnetic field actuator **32** lengthens in an axial direction, against the force exerted by rings **38**. All the while the volume of actuator **32** remains constant. As such, an axial lengthening is accompanied by a radial contraction of actuator **32**.

[0048] The expansion of actuator **32** in the presents of a magnetic field is a complex function of load, magnetic field and temperature but may be linear over a limited range. The expansion of Terfenol-D is in the range of **1200** to **1400** parts per million under proper load conditions and optimum magnetic field change. Example actuator **32,** which is about **4**" long, will expand about **.0056**" along its length while contracting in diameter about **.00055**" (static diameter is **.787**").

[0049] Operation of pump **10** may better be appreciated with reference to the schematic illustration of pump body **20** depicted in **FIGS. 8** to **9**. In operation, a source of alternating current (AC) source of electric energy **80** is applied to lead of coil **36**. The frequency for example of the applied current could in this case be **1.25** Khz resulting in this arrangement of a lengthwise contraction expansion frequency of **2.5** Khz (the rod will expand with either polarity of applied magnetic field). Coil **36**, in turn, generates an alternating magnetic field with flux lines along the axis of actuator **32**. Sheath **38** forms a magnetic guide causing flux generated by coil **36** to be directed into and out of the ends of the rod, through valve seats **40**a and **40**b.

[0050] Conveniently, eddy current losses kept at a minimum in housing **22** and the valve seats **40a** and **40b**.

[0051] A fluid to be pumped is provided by way of the inlet of pump **10** (**FIG. 1**), pipes **16**, and **18**, and inlet manifold **12**. Sheath **38** (**FIG. 4**) electrically insulates pump **10**, so that current carried by coil **36** does not create substantial electromagnetic interference beyond housing **22**.

[0052] As a result of the varying magnetic field generated by coil **36** and source **80**, the shape of actuator **32** oscillates between a first state as illustrated in **FIG. 8**, and a second state as illustrated in **FIG. 9**. Transitions between these two states, in turn, cause changes in volume of pumping chambers **72a**, **72b** and **74**, allowing these to act as positive displacement pumps.

[0053] As sheath **34** is made of a hard material such as ceramic, a radial expansion of actuator **38** and resulting displacement of the fluid within cavity **74** is resisted by sheath **34**.

[0054] Specifically, as illustrated in exaggeration in **FIG. 8**, in a first state, actuator **32** has a minimum length and a maximum diameter. Chambers **72a** and **72b**, in turn, have increased volumes, resulting in reduced pressures therein, allowing passage of liquid through valves **24a** and **24b**, and preventing flow of liquid through valves **28**a and **28**b. Liquid may thus be drawn into chambers **72**a and **72**b. At the same time, the volume of chamber **74** is reduced, and liquid therein is displaced by actuator **32**. One-way valve **26a** remains closed, while valve **26b** is opened, allowing fluid to be expelled from

axial chamber **74**.

[0055] As current flow of the source **80** varies, actuator **32** begins to expand axially and contract radially. One quarter period of oscillation of the electric source later, actuator **32** is in a second state, as illustrated in exaggeration in **FIG. 9**. In this state, actuator **32** has maximum length, and minimum diameter. As the length of actuator **32** increased it, in turn, displaces fluid in chambers **72a** and **72b**, increasing the pressure therein. At the same time, the volume of chamber **74** increases as a result of the radial contraction of actuator **32**. The pressure in chamber **74**, in turn, decreases. Valves **24a** and **24b** are closed, and valves **28a** and **28b** are open, allowing liquid to be expelled from chambers **72a** and **72b** through valves **28a** and **28b**. Similarly, valve **26a** is opened and valve **26b** is closed. Effectively, the pumping cycles of chamber**72**a and **72**b are in phase with each other, and **180**° out of phase with chamber **74**.

[0056] For example pump **10**, the total change (i.e. between minimum and maximum diameters of actuator **32**) in the volume of axial pumping chamber **74** .is **002724** cubic inches. As the annular chamber **74** expands and contracts twice in each cycle twice this volume could be displaced if there is little or no leakage and little or no compression of the working fluid. Thus, the displacement volume of chamber **74** is **.00274** cubic inches per cycle of the actuator. Combining the displacement of chamber **74** with chambers **72a** and **72b** results in a total pump displacement of **.0054** cubic inches per cycle of actuator **32**. Thus at an excitation frequency (in the coil) of **1.25** Khz (corresponding to an actuator cycle frequency of

2.5 Khz) results in displacement of **2.5**Khz * **.0054** cu in = **13.62** cubic inches per second or about **0.223** L/s. Thus, chambers **72**a, **72**b and **74** may produce a combined flow of up to about **1300** liters per hour at up to **4000** psi.

[0057] The pressure delivery of the pump depends on the compressibility of the pumped fluid as the cycle to cycle displacement is relatively small. However the pressure available from the Terfenol is in excess of **8000** psi. Although impractical, if the fluid where not compressible the above noted flow rate previously calculated at **8000** psi might be realizable under ideal non leakage conditions. A practical result is expected to be up to **4000** psi at flow rates of up to **0.12** L/s for a single pump chamber.

[0058] Conveniently, pipes **16** and **18**, and outlet manifold **14** join the output of pumping chambers **72a**, **72b** and **74** allowing these to act in tandem. Advantageously, as chambers **72a** and **72b** are **180**° out of phase with pumping chamber **74**, interconnection of the three chamber provides a smooth pumping action, with two compression cycles for every cycle of actuator **32**. Additionally, location of pumping chambers around the entire outer surface of actuator **32** allows forces within pump **10** to be balanced, reducing overall vibration of pump **10**, during operation. Specifically, as the pressure of pumped fluid is equal all round actuator **32**, net side forces are eliminated as a result and lateral vibration of the actuator **32** is reduced. The forces on actuator **32** due to pressure in the axial direction are balanced because the pressures from which the axial cavities are charged and discharged are

the same because they are connected together and the end cavities are in phase.

[0059] More significantly, however, are the vibrational forces. If actuator **32** were fixed at one end, the acceleration forces related to the vibration of the actuator are reacted at the one end resulting in inertially related vibrations. In pump **10** two opposite ends of the actuator **32** accelerate in equal and opposite directions resulting in equal and opposite inertial forces which cancel. This results in a balanced system resulting in significantly less vibration and noise than could be obtained in conventional imbalanced arrangements.

[0060] **FIG. 10** further illustrates a multi-pump, pump assembly **100** including a plurality (three are illustrated) of pumps **102**, each substantially identical to pump **10** (**FIG. 1**). As illustrated, pipes **18** interconnect pumps **102**. Inputs and outputs of pumps **102** are connected in parallel. Pump assembly **100** may be beneficial if higher flow rates are required.

[0061] Conveniently, each pump of the pump assembly **100** may be driven out of phase from the remaining pumps. For example, for a three pump assembly, each pump **102** may be driven from one phase of a three phase power source (not shown), so that each pump **102** further smoothing any pressure fluctuations in output of any pump **102**. Additionally this arrangement allows for redundancy as is often required for high reliability systems. Failure of one of the pumps **102** or one of the electrical phases would not cause total loss of flow.

[0062] Pump assembly **100** could similarly be arranged with inputs and outputs of pumps **102** interconnected in series. In this way, each pump **102** would incrementally increase pressure of a pumped fluid.

[0063] As should now be appreciated, the above described embodiments may be modified in many ways without departing from the present invention.

[0064] For example a pump and pump assembly could be machined and manufactured in many ways. One or more pumps may be cast in a body that does not have an outer cylindrical shape. Fluid conduit from and between pumps could be formed integrally in the cast body. Valves need not be arranged radially at **120°** about an axis of an actuator, but could instead be arranged in along one or more axis of a body defining the pump.

[0065] An exemplary pump having only two pumping chambers will provide many of the above described benefits. For example, a pump having only two in-phase chambers (like end chambers **72a**, **72b**) driven by a single actuator may provide a balanced pump, with relatively few moving parts having only a single pumping stroke for a cycle of an actuator. Similarly, a pump having two chambers driven by a single actuator, with each of the pump chambers **180°** out of phase with the other may provide relatively smooth pumping action. Of course, a pump having more than three chambers could be similarly formed.

[0066] Of course, a pump embodying the present invention may be formed with many configurations, in arbitrary shapes. For example, the pump assembly,

housing and actuator need not be cylindrical. Similarly, pumping chambers need not be directly defined by a magnetostrictive element. Instead, an actuator may be mechanically coupled to the pumping chambers in any number of known ways. For example, the pumping chamber could be formed of a bellows driven a magnetostrictive actuator.

[0067] Of course, the above described embodiments, are intended to be illustrative only and in no way limiting. The described embodiments of carrying out the invention, are susceptible to many modifications of form, arrangement of parts, details and order of operation. The invention, rather, is intended to encompass all such modification within its scope, as defined by the claims.

WHAT IS CLAIMED IS:

1. A pump (10) having a housing (20), defining a cavity, and an actuator (32) within said housing, characterised in that the actuator is formed of magnetostrictive material and the pump further includes first and second pumping chambers (72a,72b) within said housing at opposite ends of a lengthwise extent of said actuator, each of said pumping chambers mechanically coupled to said actuator to compress as said actuator extends in length.

2. The pump of claim **1**, wherein fluid in each of said first and second pumping chambers (72a,72b) is displaced by a lengthwise extension of said actuator (32).

3. The pump of claim **1**, wherein said first and second pumping chambers (72a,72b) are driven by opposite ends of said actuator (32).

4. The pump of claim **1**, wherein said first and second pumping chambers (72a,72b) are fluidly in parallel with one another.

5. The pump of claim **1**, further comprising a third chamber (74) extending axially along a length of said actuator (32), fluid in said third chamber displaced by a radial expansion of said actuator.

6. The pump of claim 5, wherein said first, second, and third pumping chambers (72a,72b,74) are fluidly in parallel with one another.

7. The pump of claim 5, wherein inlets of said first, second, and third pumping chambers are fluidly coupled.

8. The pump of claim 5, wherein outlets of said first, second, and third pumping chambers are fluidly coupled.

9. The pump of claim 1, wherein said opposite ends of actuator (32) are free within said housing (20) to accelerate in equal and opposite directions.

10. The pump of claim 1, wherein said first and second pumping chambers (72a,72b) are defined in part by said opposite ends of actuator (32), respectively.

11. The pump of claim 1, wherein the actuator (32) is cylindrical.

12. A pumping assembly, comprising a plurality of pumps (10) in accordance with claim 1, wherein inputs and outputs of said plurality of pumps are in parallel with one another.

13. A pumping assembly, comprising a plurality of pumps (10) in accordance with claim 1, wherein inputs and outputs of said plurality of pumps are interconnected in series.

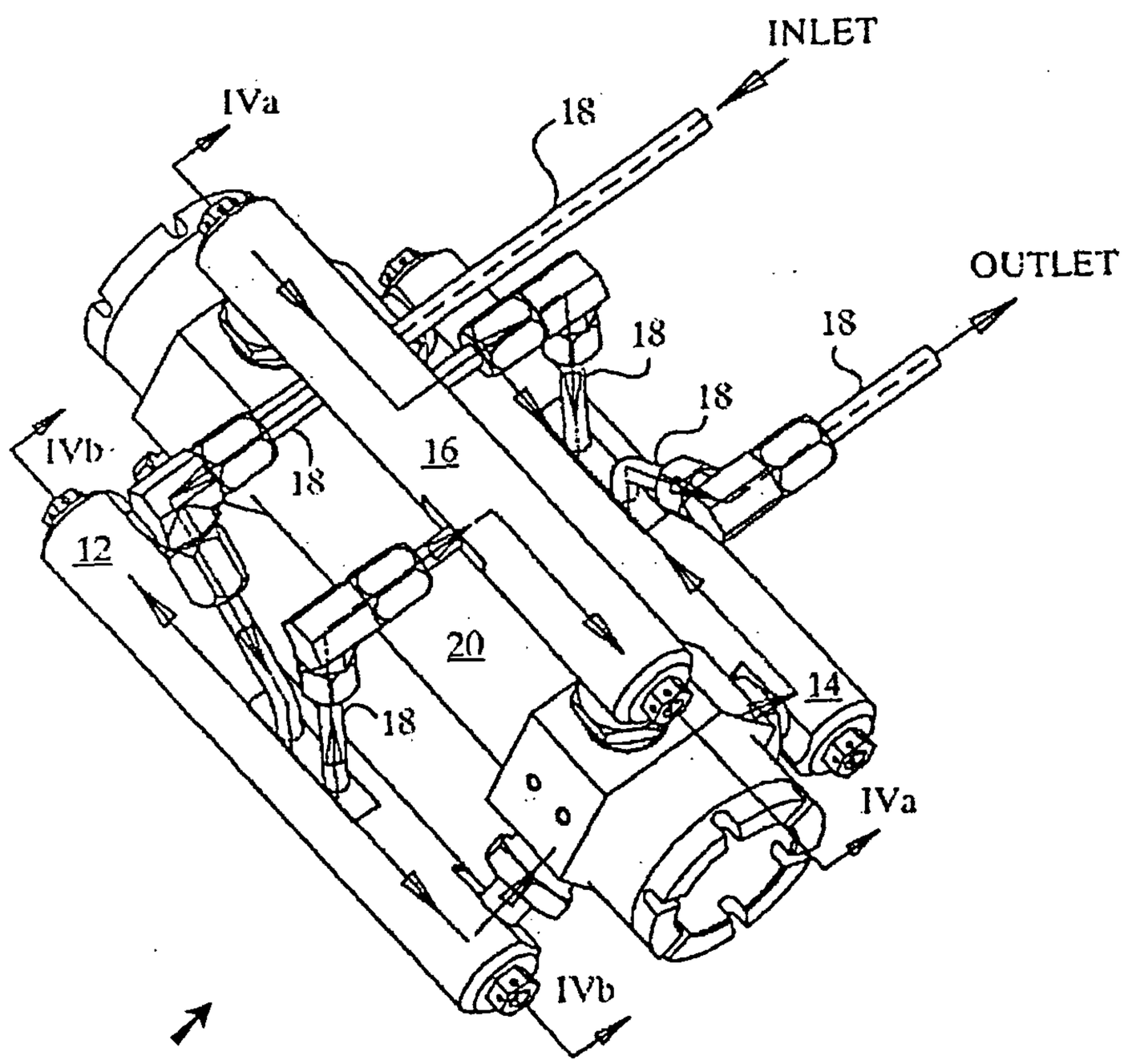

FIG. 1

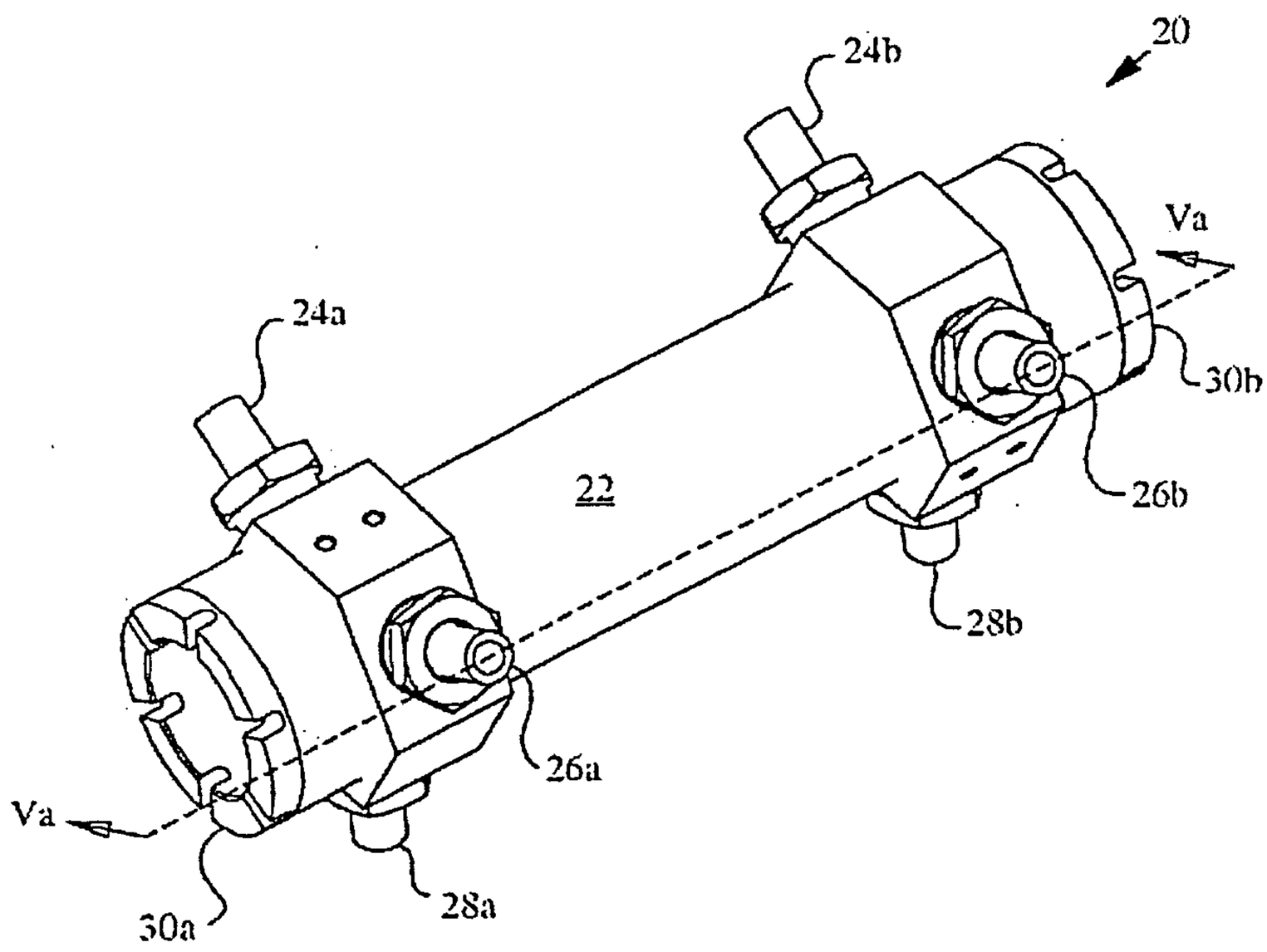

FIG.2

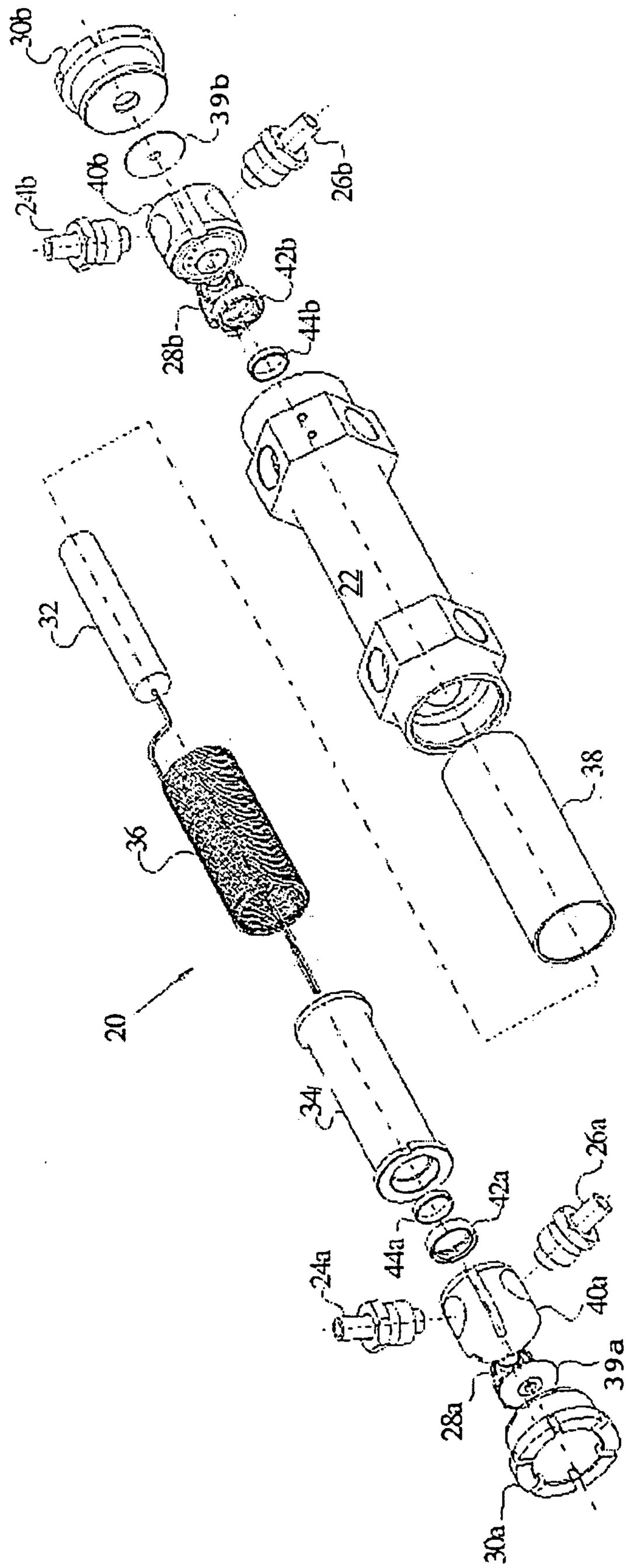
30b
39b
40b
24b
26b
42b
28b
44b
22
32
38
36
20
34
26a
42a
44a
24a
40a
39a
28a
30a

FIG.3

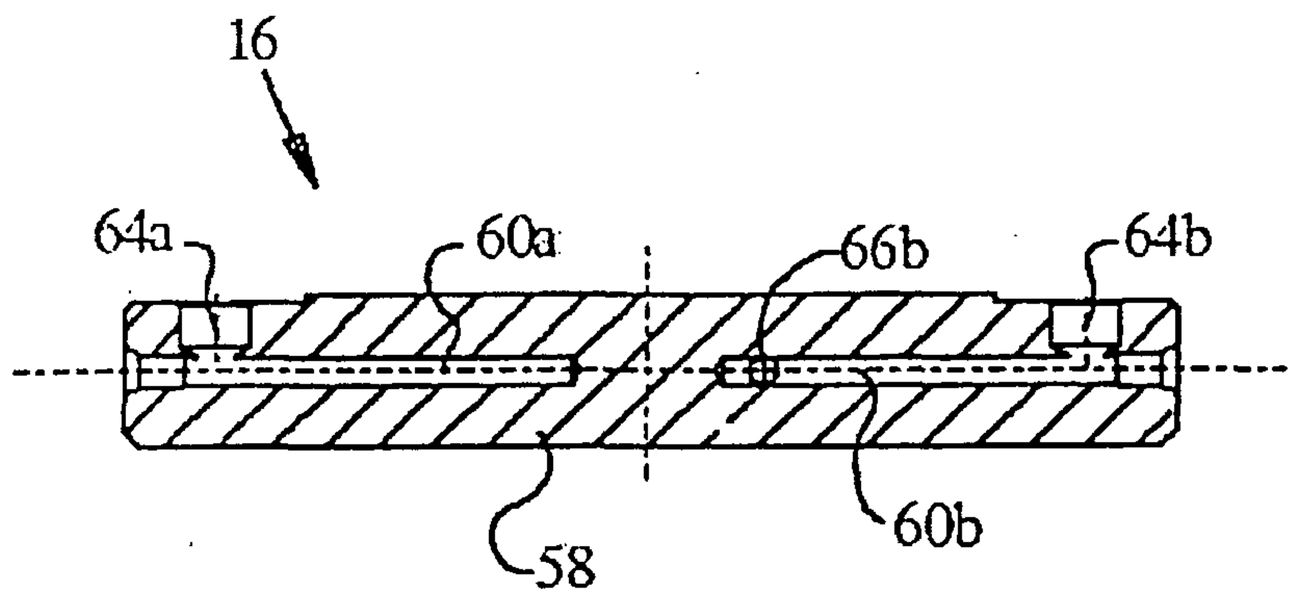

FIG.4A

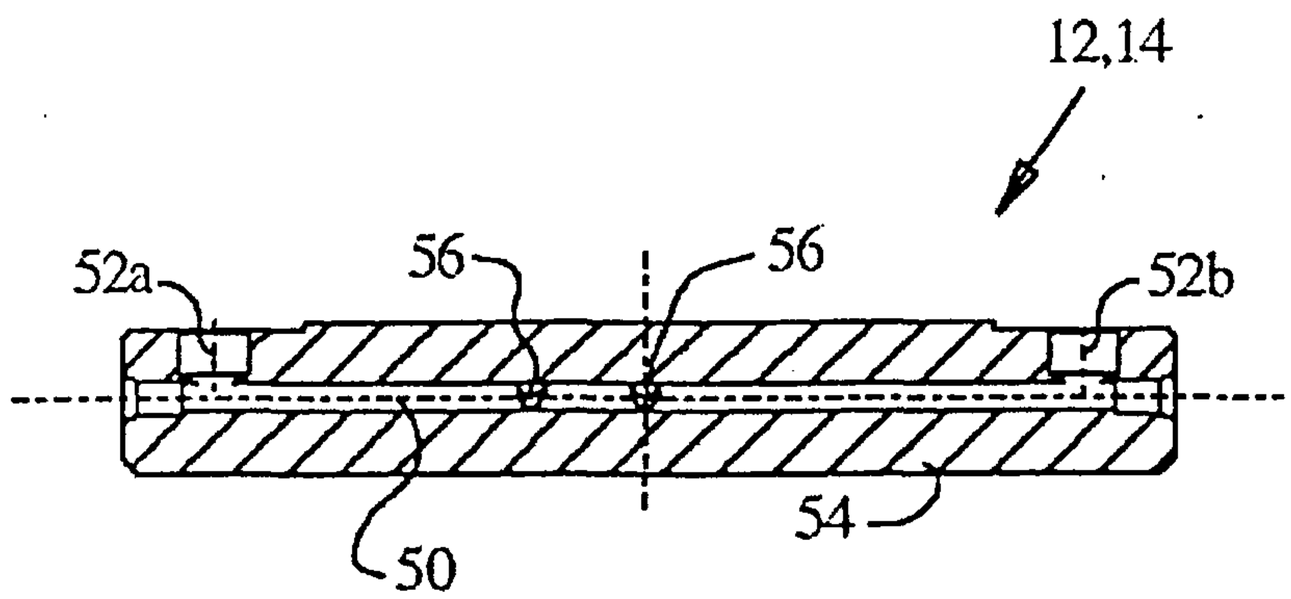

FIG.4B

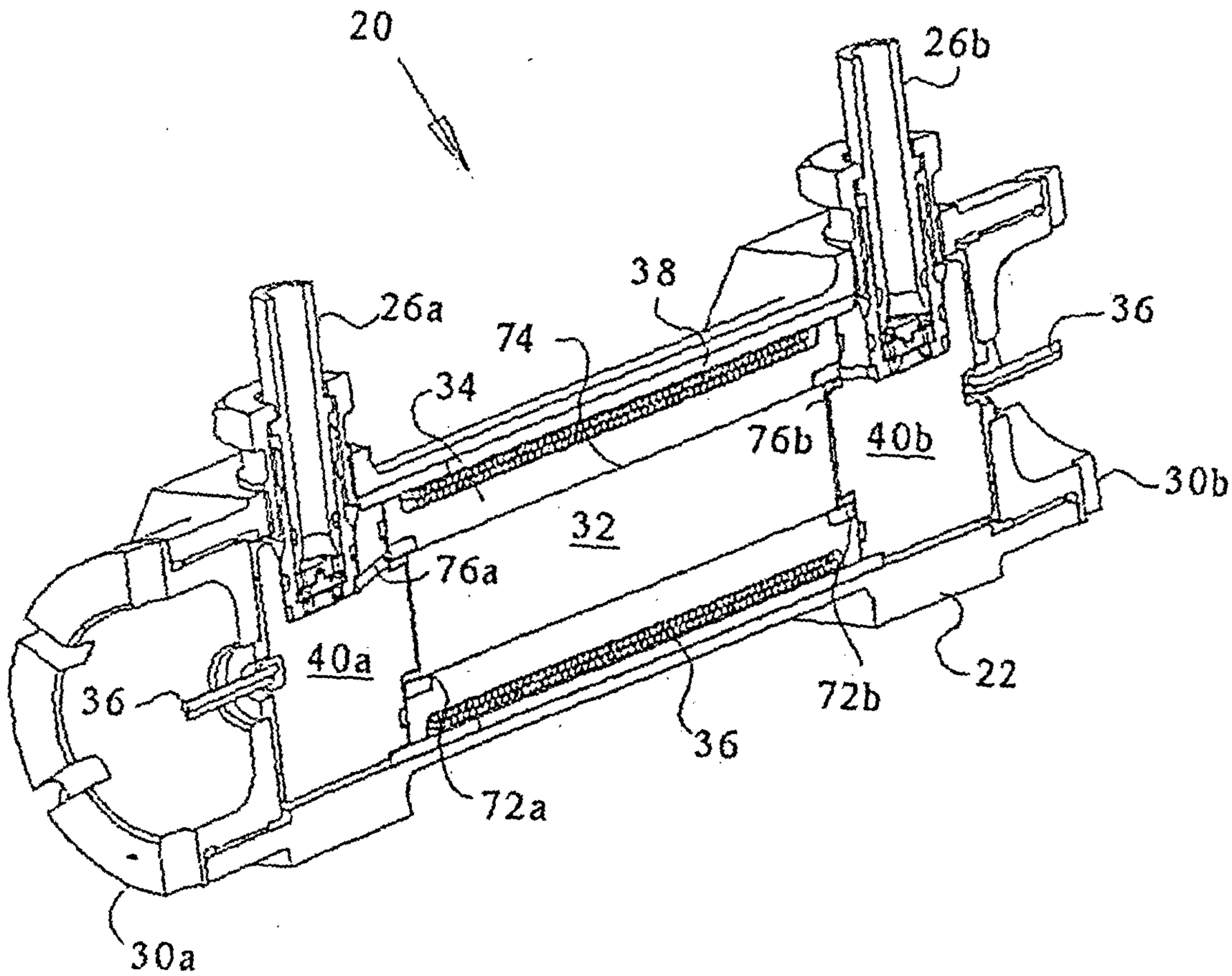

FIG.5A

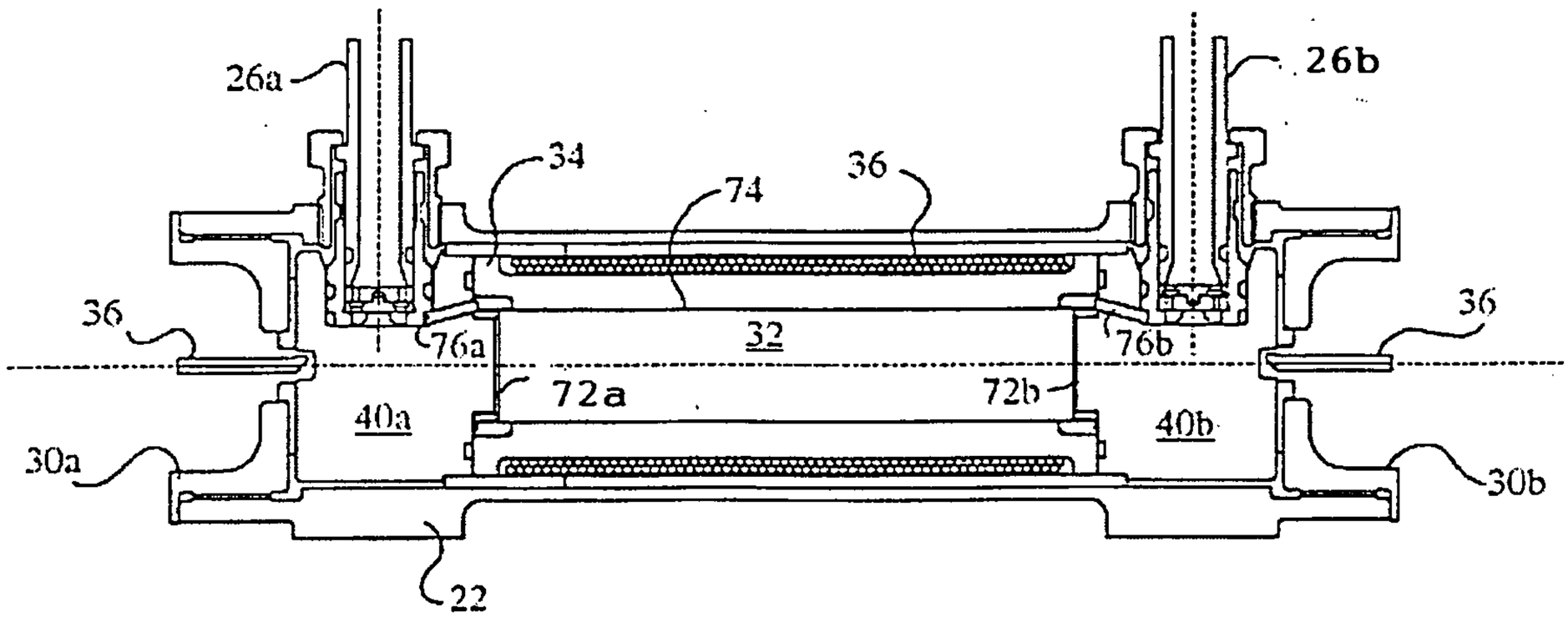

FIG.5B

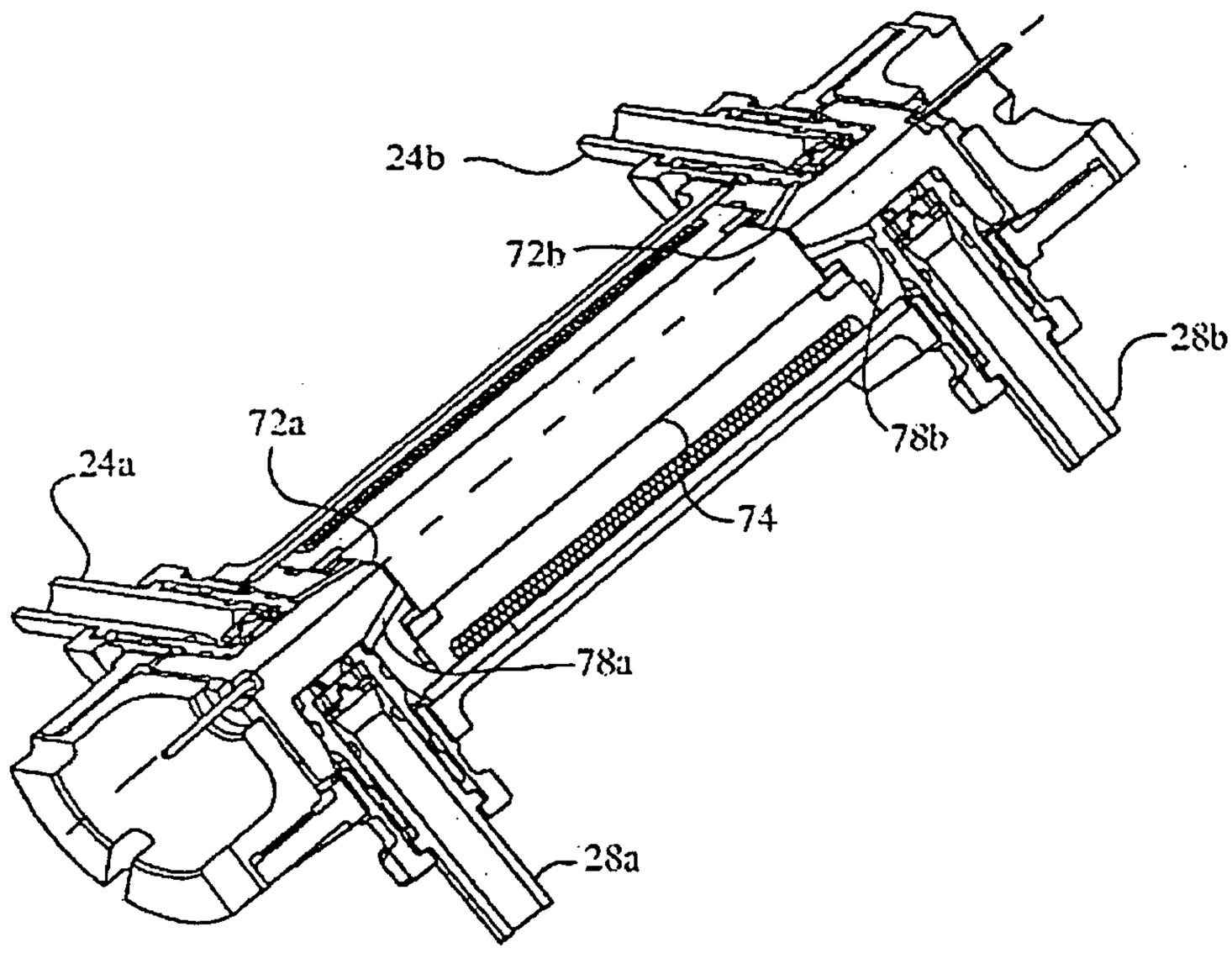

FIG.6A

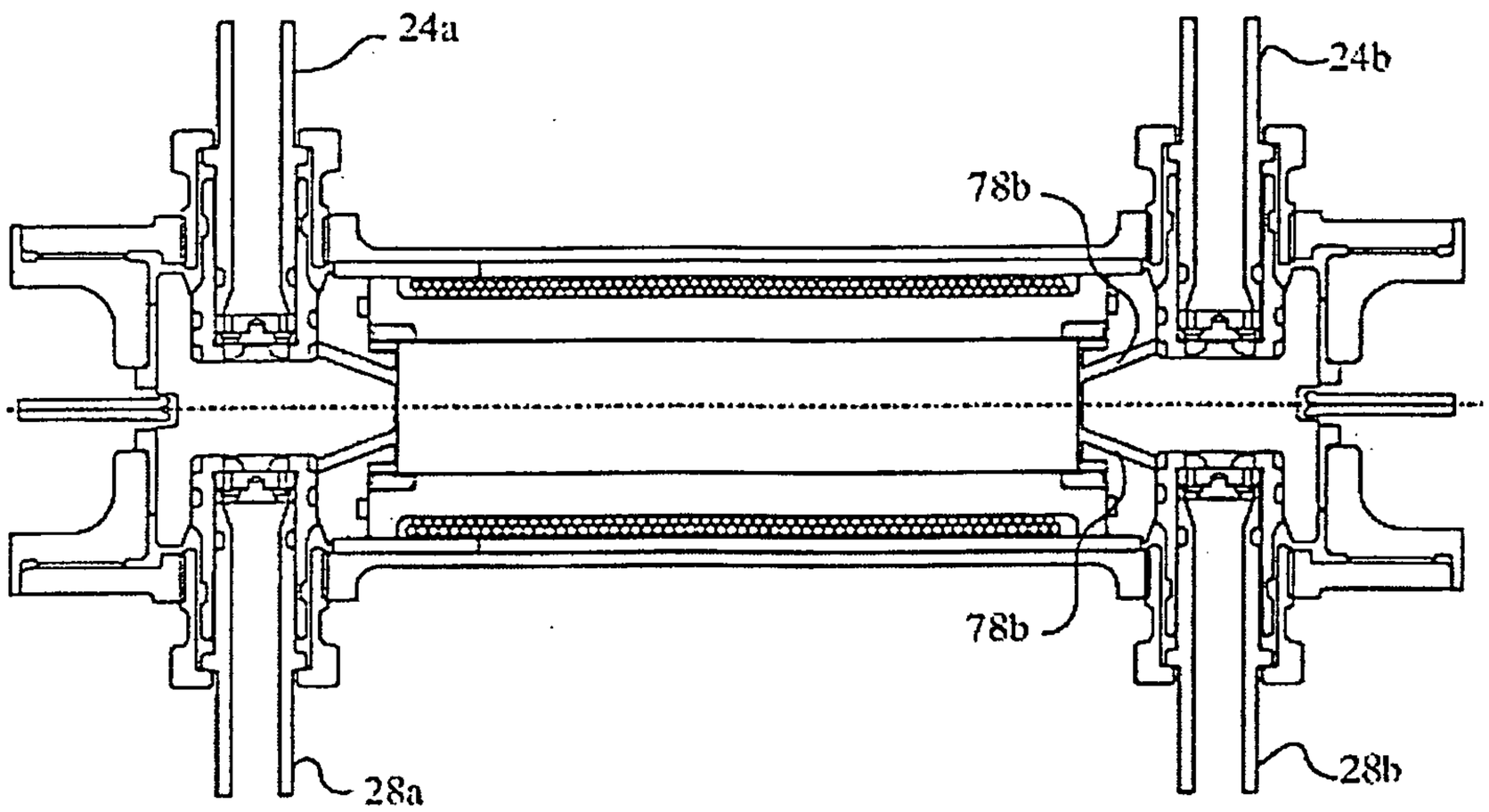

FIG.6B

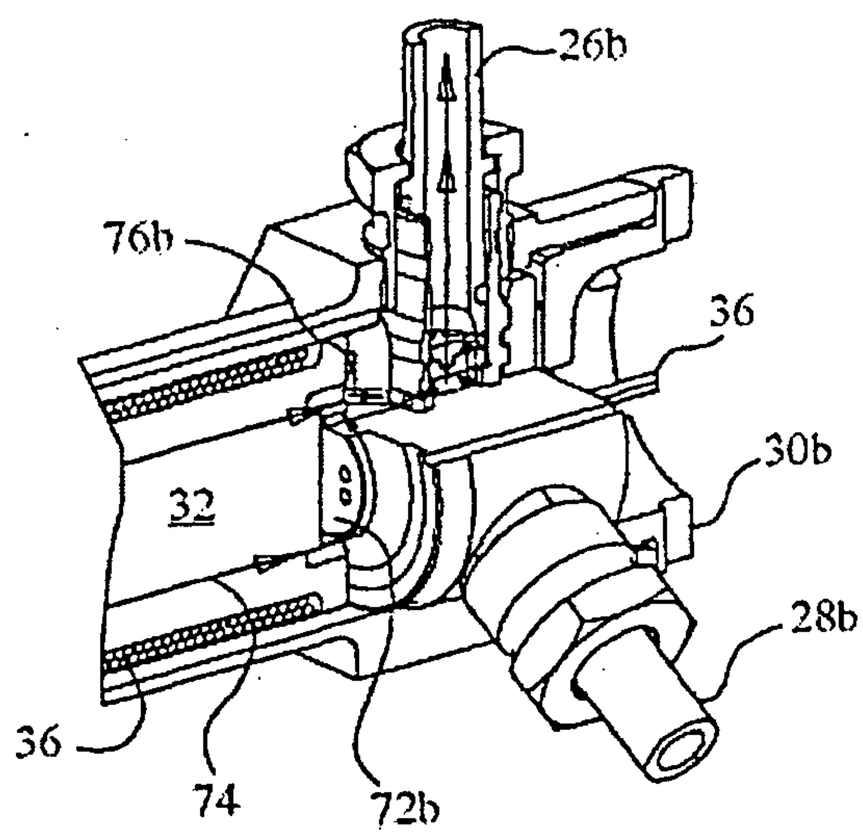

FIG.7A

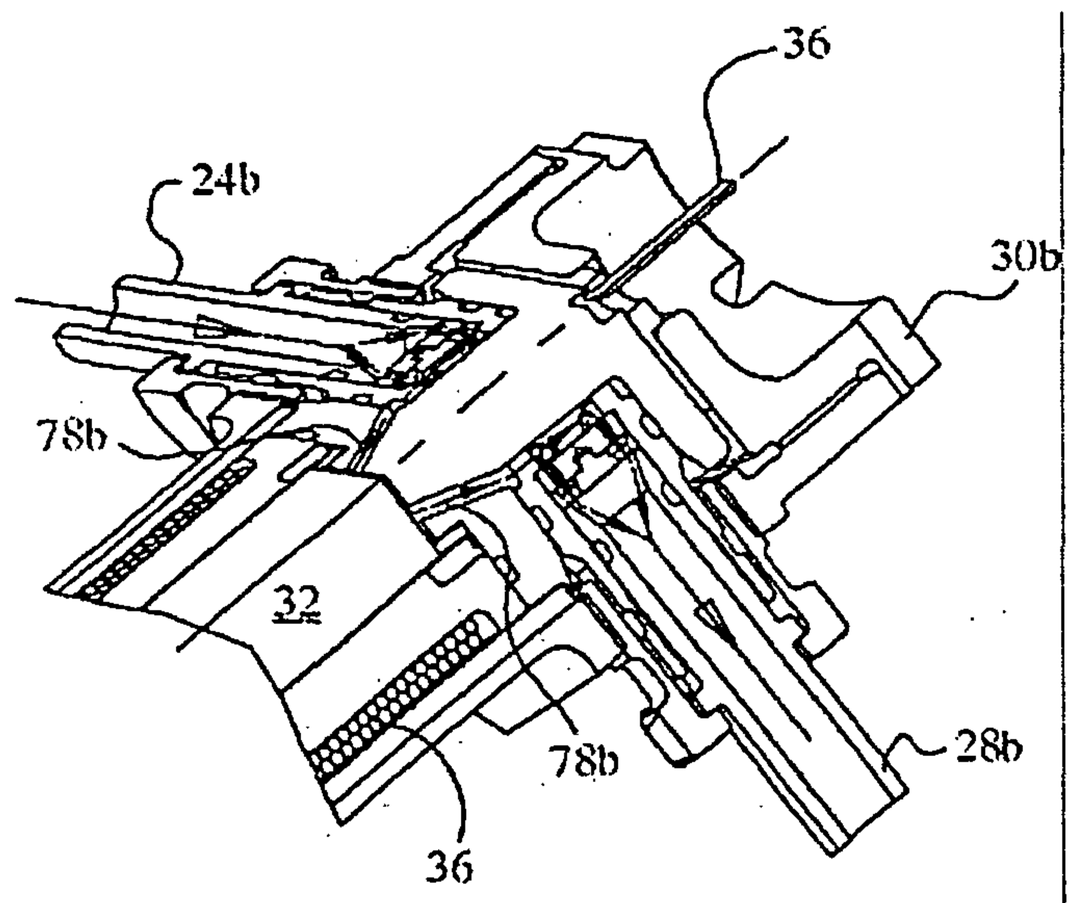

FIG.7B

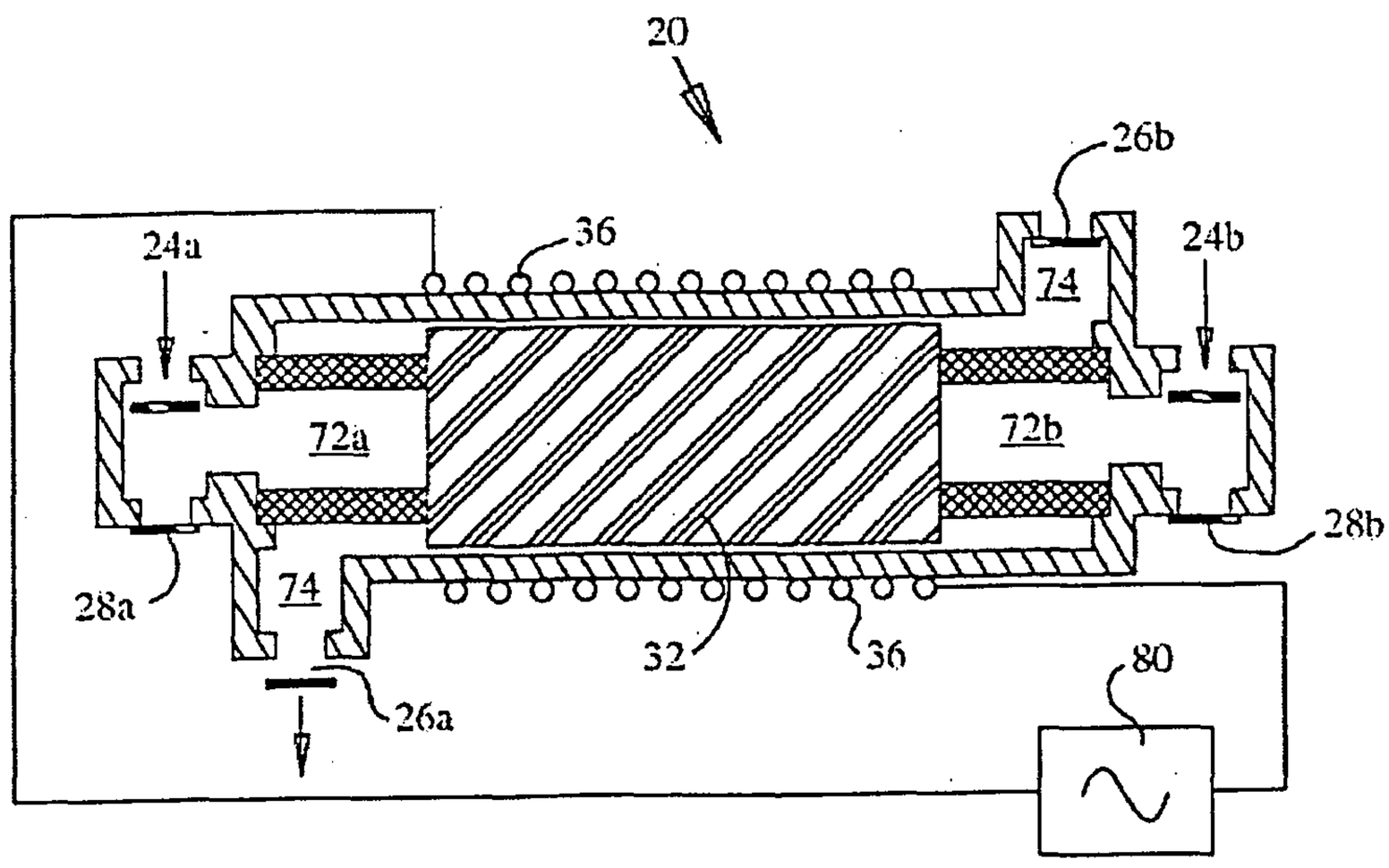

FIG.8

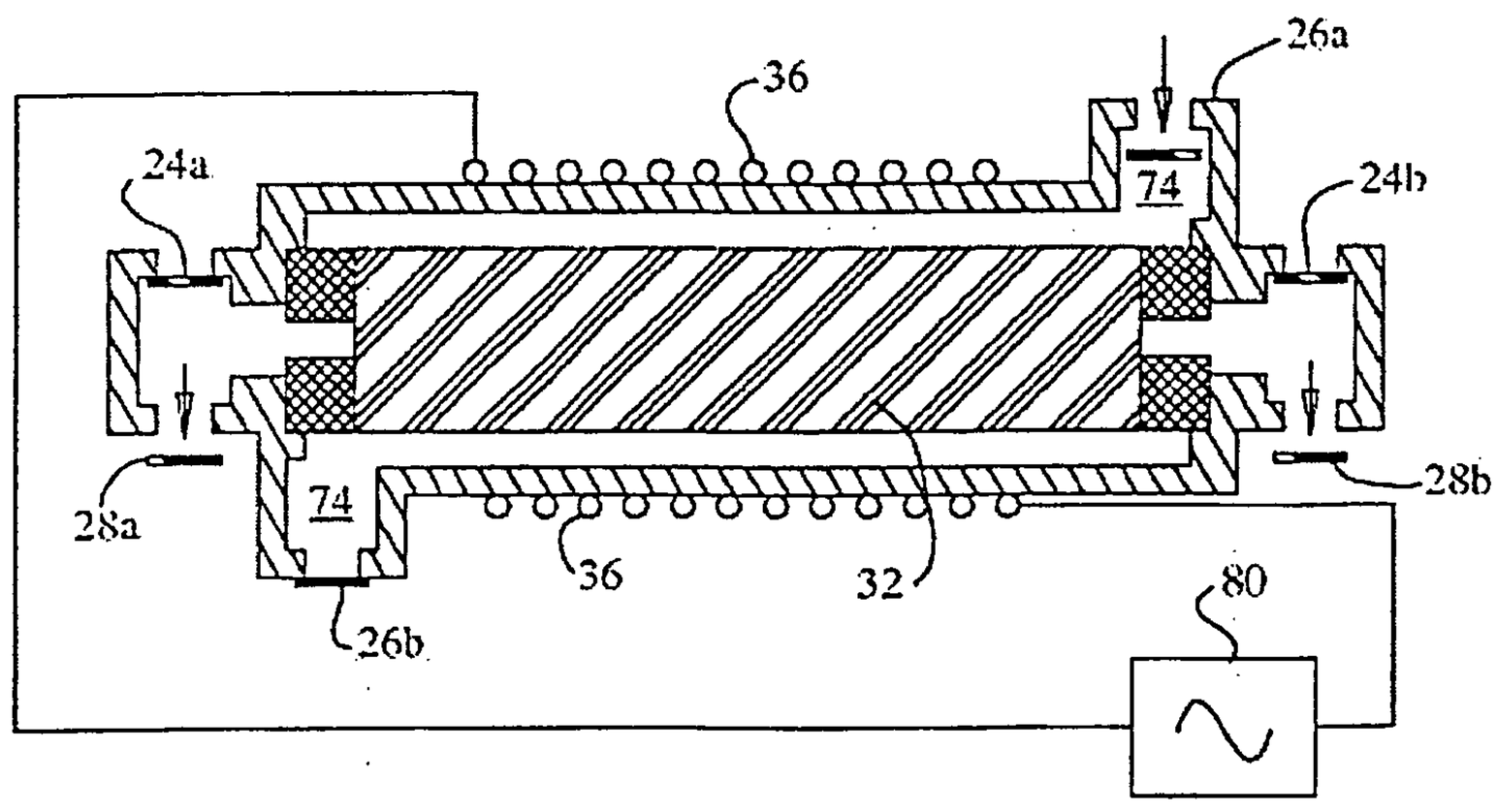

FIG.9

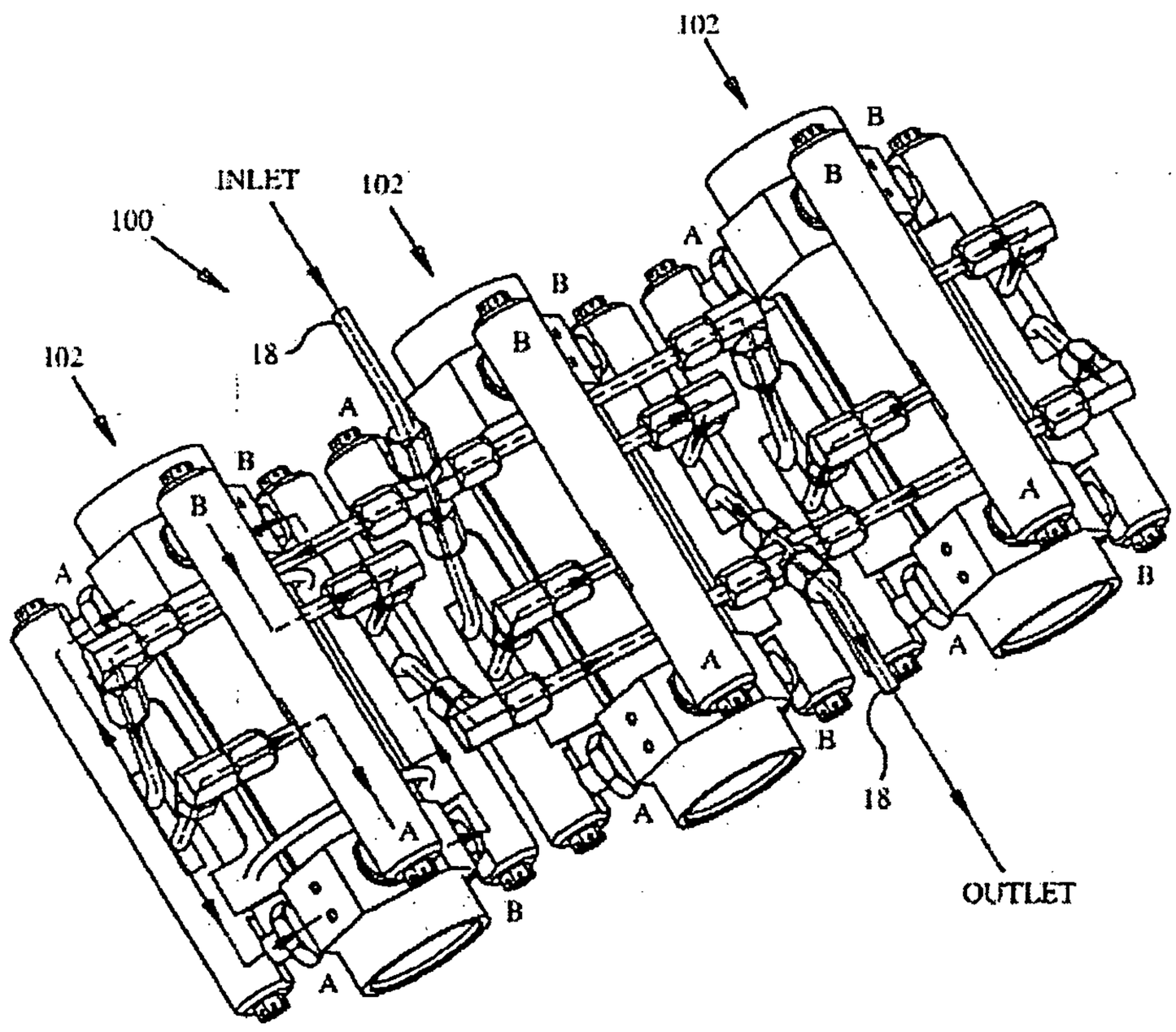

FIG.10

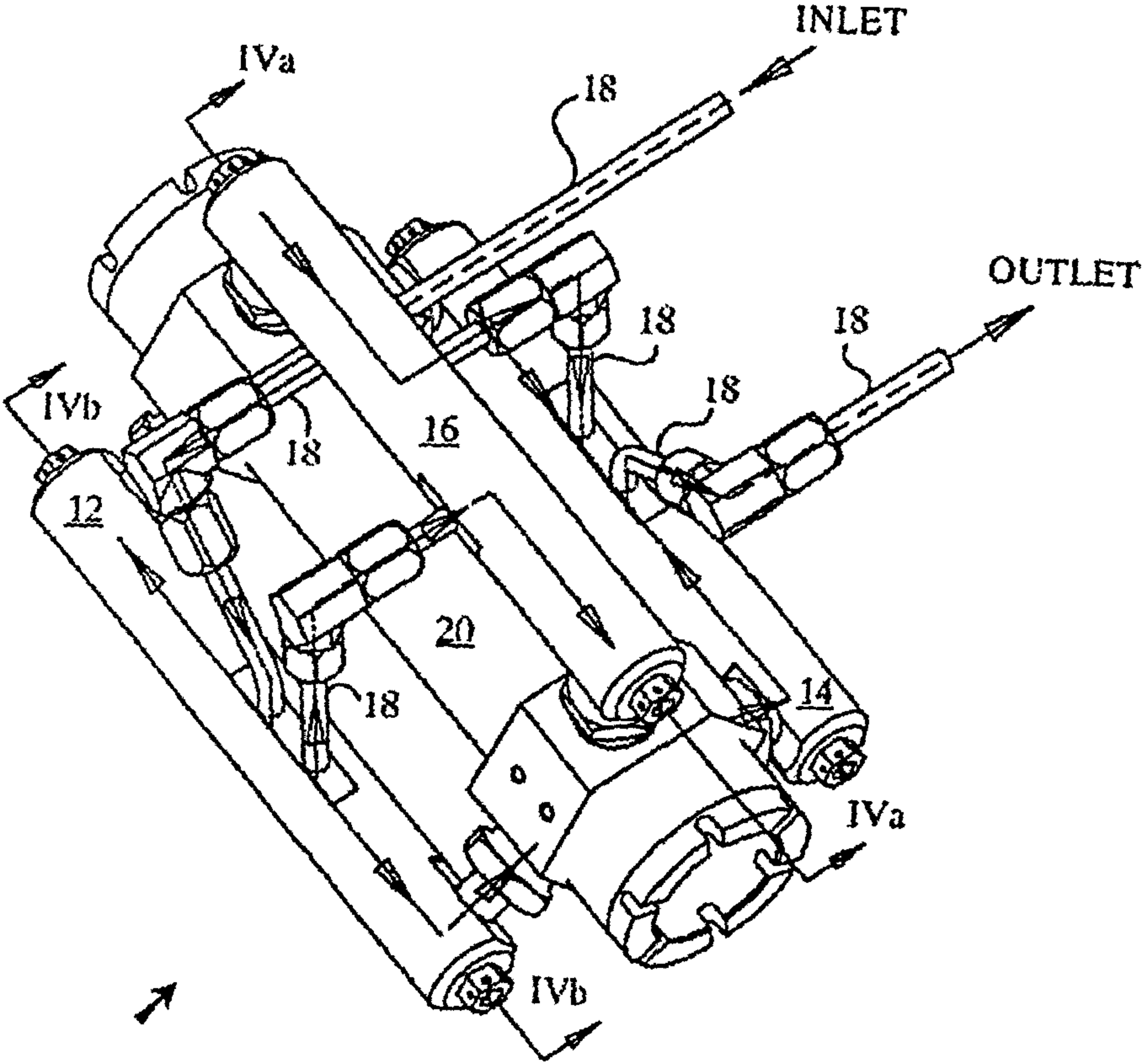

10