United States Patent

Pakutka et al.

[15] **3,636,297**

[45] **Jan. 18, 1972**

[54] REFRACTORY METAL BRAZING WITH NIOBIUM PENTOXIDE FLUX

[72] Inventors: **Willard M. Pakutka**, Orange; **Nicholas F. Cerulli**, North Caldwell; **Gerald T. Scanlon**, Somerset, all of N.J.

[73] Assignee: **Westinghouse Electric Corporation**, Pittsburgh, Pa.

[22] Filed: **Oct. 15, 1970**

[21] Appl. No.: **80,987**

[52] **U.S. Cl.** **219/85**, 29/502, 29/504

[51] **Int. Cl.** **B23k 1/04**

[58] **Field of Search** 219/85; 29/501, 502, 500, 504

[56] **References Cited**

UNITED STATES PATENTS

2,406,310	8/1946	Aguk	219/85 X
2,448,329	8/1948	Schwinn	219/85
3,073,270	1/1963	Johnson et al.	219/502
3,293,741	12/1966	Gilliland	29/504 X

OTHER PUBLICATIONS

Stone et al., " Brazing Alloys and Techniques for Tantalum Honeycomb Structures," Welding Journal, Aug., 1967, pp. 343s–350s

Schwartz, " Brazing of Sandwich Structures of Columbium Alloys," Welding Journal, Apr., 1961, pp. 377–382

Primary Examiner—J. V. Truhe

Assistant Examiner—L. A. Schutzman

Attorney—A. T. Stratton, W. D. Palmer and B. R. Studebaker

[57] **ABSTRACT**

A method for sealing the niobium end cap of a ceramic arc tube to the tantalum exhaust and fill tubulation which comprises the steps of; placing the tubulation through a close fit aperture in the end cap, painting the areas of the tubulation and end cap to be brazed with a pastelike solution of niobium pentoxide, positioning a niobium, or a niobium and a titanium, ring or wire about the tubulation in a position contacting both the end cap and the tubulation at their juncture, and passing sufficient electric current through the tubulation to cause the ring or rings to melt and seal the end cap to the tubulation.

7 Claims, 7 Drawing Figures

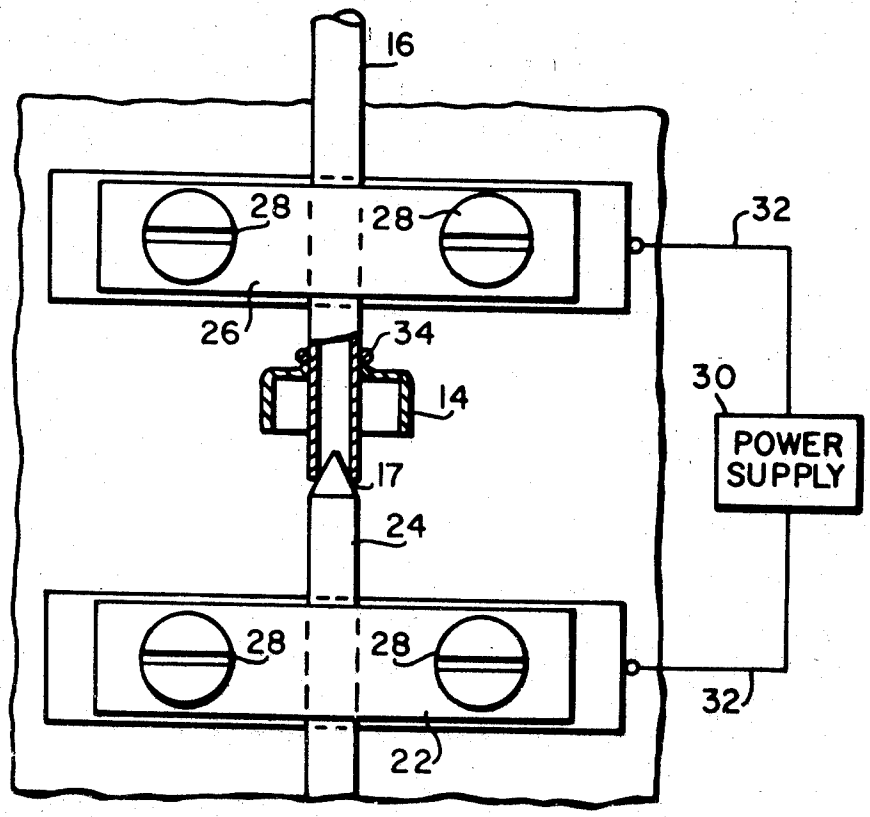

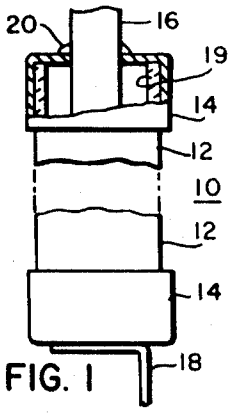

FIG. 1

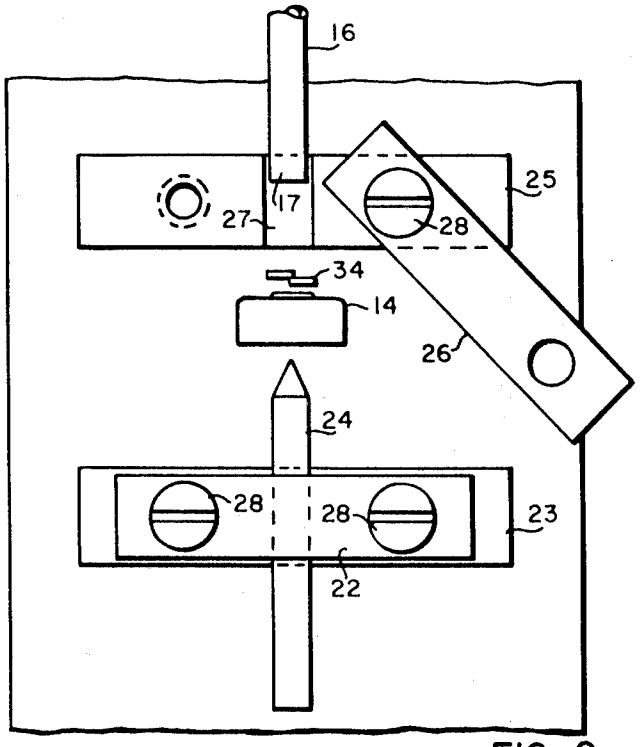

FIG. 2

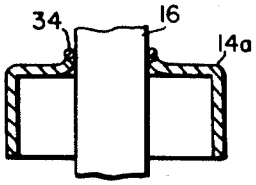

FIG. 4

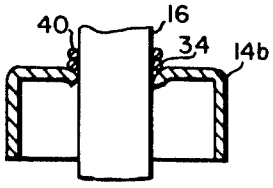

FIG. 5

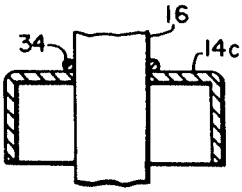

FIG. 6

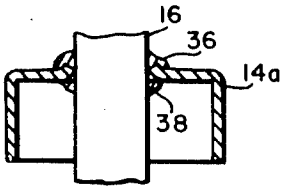

FIG. 7

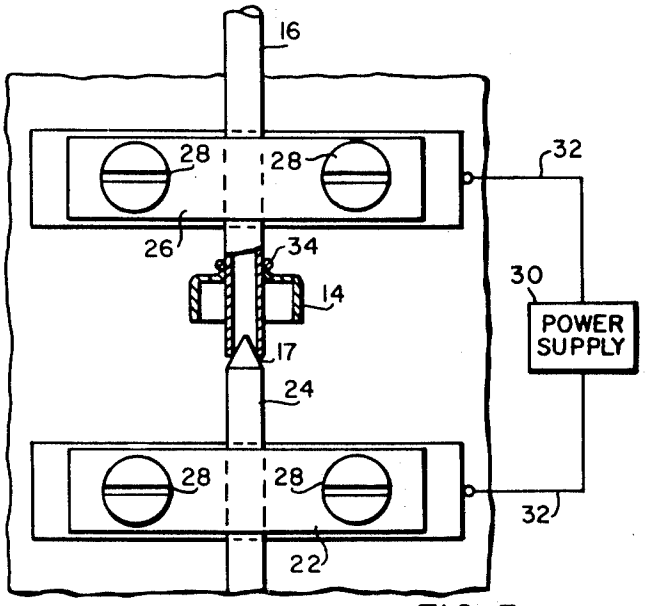

FIG. 3

REFRACTORY METAL BRAZING WITH NIOBIUM PENTOXIDE FLUX

BACKGROUND OF THE INVENTION

The ceramic bodied arc discharge lamp is a new and a promising source of illumination for the lamp industry. In manufacturing this type of lamp, however, many material and process problems, new to the industry, are now confronting the lamp manufacturers. The ceramic bodied arc lamp generally consists of a ceramic body or envelope, tubular in cross section, closed off at each end by a refractory metal end disc or cap. These end discs or caps generally carry the opposing discharge sustaining electrodes within the arc tube. After the end discs or caps are sealed to the ceramic envelope the envelope must be exhausted and filled with a discharge sustaining filling of, for example, elements such as mercury, argon and/or sodium to name only a few of the possible discharge sustaining constituents. In order to accomplish this exhausting and filling process, at least one of the end caps or discs must carry a short length of refractory metal tubulation which extends through the end cap or disc to provide the necessary access to the interior of the sealed lamp body.

Several methods have been employed with varying degrees of success for joining the refractory metal exhaust and fill tubulation, generally tantalum, to the refractory metal end cap or disc which is normally niobium. One such method was a titanium braze, the braze being accomplished by RF heating under vacuum conditions. As higher melting point sealing glasses are employed for securing the polycrystalline alumina arc tube to the end cap, some of which have a higher melting point than titanium it becomes apparent that titanium cannot be used in the tubulation seal since it will remelt when the higher melting point sealing glass is employed to seal the arc tube to the end cap.

An improved method of sealing the niobium end cap of a ceramic arc tube to the tantalum exhaust and fill tubulation is disclosed in copending application Ser. No. 728,943 filed May 14, 1968, now Pat. No. 3,584,372 issued on June 15, 1971 to Daniel A. Larson and owned by the assignee of this application. This method employs a niobium brazing alloy to braze the end cap to the tubulation by electrical resistance welding techniques. Although good seals were in many cases accomplished by this technique, in some instances, it has been found that since the brazing metal melts at the same temperature as the end cap either poor bonding or burn-through frequently occurred.

The brazing technique of this invention is an improvement on the method disclosed in the above-identified copending application.

SUMMARY OF THE INVENTION

This invention relates to the brazing of refractory metal members and more particularly to the production of a hermetic seal between the niobium end cap and the tantalum exhaust and fill tubulation in the manufacture of ceramic arc tubes for ceramic discharge lamps.

The improved brazing technique of this invention, for sealing the end cap to the tubulation in a ceramic discharge lamp, comprises the steps of; preparing a slurry of niobium pentoxide having a pastelike consistency, painting the juncture of the refractory metal parts to be brazed with said slurry, placing niobium brazing metal at the painted juncture of the parts to be brazed, and heating the juncture to a temperature sufficient to cause complete alloying action between the refractory metal parts and the niobium brazing ring.

BRIEF DESCRIPTION OF THE DRAWINGS

Many of the attendant advantages of the present invention will become more readily apparent and better understood as the following detailed description is considered in connection with the accompanying drawings, in which:

FIG. 1 is a side elevational view of a typical ceramic arc tube with a portion of the end cap broken away;

FIG. 2 is a front plan view of one form of a fixture capable of practicing the method of the present invention and illustrating the parts prior to assembly;

FIG. 3 is a front plan view similar to Fig. 2 with the parts assembled in preparation for sealing;

FIG. 4 is a blown up view of the assembled parts prior to sealing with the ring and end cap in section;

FIGS. 5 and 6 are blown up views similar to FIG. 4 illustrating alternative configurations which the end cap may take; and

FIG. 7 is an enlarged view similar to Fig. 4 illustrating the assembly after sealing.

DESCRIPTION OF THE PREFERRED EMBODIMENTS

Referring now in detail to the drawing in which like reference characters represent like parts throughout the several views, there is illustrated in FIG. 1 a typical ceramic discharge lamp which illustrates one purpose for which the sealing method of the present invention may be employed. The ceramic discharge lamp, generally designated **10**, includes a tubular polycrystalline alumina body member **12** closed at each end by an end cap or end closure member **14**. At least one end of the ceramic arc tube carries the length of exhaust and fill tubulation **16** which serves as a lead-in conductor and extends through the end closure member **14**. The tubulation **16** carries at its inner end one of the arc sustaining electrodes (not shown). Generally at the other end a simple, flexible refractory metal strap as illustrated at **18** is employed as a lead-in conductor and the other of the arc-sustaining electrodes is mounted on the inside of the lower closure member **14** on a similar refractory metal strap (not shown).

One of the principal problems which have confronted the lamp manufacturers in the manufacture of ceramic discharge lamps is the various seals that are required between the parts. The seals must be vacuumtight, able to withstand extremely high temperatures (in excess of 1,000° C.) and must also be able to withstand attack from alkali metal vapors employed in the discharge. Various sealing glasses which principally comprise calcium aluminate have been employed successfully to seal the niobium end cap **14** to the ceramic body **12**. The seal is formed in the area indicated at **19**. The seal with which this invention is concerned is the weld or braze between the tantalum tubulation **16** and the niobium end cap **14** indicated at **20** in FIG. **1**.

Referring now to FIGS. **2** through **7**, the method of the present invention is described in detail. Illustrated in FIG. **2** is a fixture which may be employed to practice the method of this invention. The fixture includes a lower clamping bar **22** which retains locating pin **24** in position to receive the tantalum tubulation **16**. The locating pin **24** is secured between the lower clamping bar **22** and the lower clamping bar baseplate **23** by a pair of securing members or bolts **28**. Directly above the lower clamping bar assembly is an upper clamping bar assembly which includes an upper clamping bar baseplate **25** and an upper clamping bar **26**. The clamping bar **26** is similarly secured to the baseplate **25** by securing members or bolts **28** and serves to retain the tubulation **16** in the slot **27** of the upper clamping bar baseplate. When a tubulation and end cap assembly, prepared in accordance with this invention, is mounted within the fixture as illustrated in FIG. **3** the power supply **30** is actuated causing a current to flow through leads **32** to the clamping bar baseplate members **23** and **25** thus passing sufficient current through the tubulation **16** and locating pin **24** to cause a high quality braze to be effected between the tantalum tubulation and the niobium end cap.

Referring now to FIGS. **4** through **6** there are illustrated the various configurations which the end cap **14** may take while still providing for high quality hermetically sealed brazes in accordance with the present invention. FIG. **4** illustrates an end cap **14*a*** having an outwardly extending flange at the tubulation receiving aperture. FIG. **5** illustrates an end cap **14*b*** with

an inwardly directed flange at the tubulation receiving aperture while FIG. 6 illustrates an end cap 14c which is without a flange at the tubulation receiving aperture.

A similar fixture as that disclosed herein was disclosed in the copending application of Daniel A Larson for Method of Joining Refractory Metal Members, Ser. No. 728,943 filed May 14, 1968. In accordance with that invention a niobium ring was placed adjacent the juncture of the niobium end cap and the tubulation and sufficient current passed through the tubulation to effect a braze between the end cap and the tubulation. Since the brazing metal and the end cap melted at approximately the same temperature either poor bonding or burn-through of the end cap adjacent the tubulation occasionally occurred. It has been found that niobium can be used as a reliable braze for niobium end caps provided Nb_2O_5 is coated on the brazing area prior to melting. The Nb_2O_5 serves as a flux by providing oxygen to the brazing surfaces thereby forming a lower melting point Nb-O alloy. This alloy serves as an intermediate wetting layer to which the niobium brazing metal and the niobium end piece are strongly bonded. Burnouts are thus avoided and satisfactory fillets are formed.

When brazes constructed by the method of this invention are cross sectioned and examined microscopically by the electron microprobe, complete alloying action between the end cap, braze and tubulation was identified.

The commercial grade niobium pentoxide powder, for example, 325 mesh product of American Potash Corp., Los Angeles, California, is disposed in alcohol or water to form a slurry having a pastelike consistency. As a specific example, 1 gram of the Nb_2O_5 powder may be disposed in about 2CC. of water, alcohol, acetone or a similar vehicle to form a suitable slurry.

The niobium pentoxide (Nb_2O_5) in slurry form is then applied to the areas adjacent the juncture of the tantalum tubulation and the niobium end cap. The niobium pentoxide may be applied as for example by painting the areas with a brush. The application of niobium pentoxide to the tantalum tubulation and niobium end cap adjacent their juncture may be performed either prior to assembly (i.e., slipping the tubulation through the close fit aperture in the end cap) or after the two parts are assembled and placed in their final relationship with respect to each other. After the niobium pentoxide coated juncture of the tubulation and end cap is established a brazing ring 34 of niobium is slipped over the tubulation and placed in contact with the niobium pentoxide paint at the juncture of the tubulation and end cap. Preferably, the parts are painted with the slurry prior to assembly, the parts including the brazing ring assembled and then a second coat of slurry is applied. After the assembly is placed in the holding fixture and the upper clamping bar 26 secured, the power supply 30 is activated causing sufficient current to flow through the tubulation 16 and the locating pin 24 to cause a braze to be formed by the brazing metal 34 between the end cap 14 and the tubulation 16. As illustrated in FIG. 7, the niobium pentoxide coating will cause the brazing material 34 to flow and form double fillets on both the interior surface and exterior surface of the end cap adjacent the tubulation as illustrated at 36 and 38.

Employing the niobium pentoxide flux of this invention also improves substantially the braze formed by a niobium-titanium brazing alloy. As illustrated in FIG. 5 a second ring 40 of titanium may be placed adjacent the niobium ring 34 after the brazing areas of the tubulation and end cap have been coated with the niobium pentoxide flux. When two brazing wire rings one of niobium and one of titanium are used in conjunction with the niobium pentoxide flux and fired simultaneously an alloy is formed in situ which is a complete series of solid solutions ranging from pure niobium (melting point about 2,470° C.) to pure titanium (melting point about 1,675° C.). When used in conjunction with the niobium pentoxide flux a very strong double fillet is formed and good brazing action was again verified by microscopic and electron microprobe examination. To the contrary, when a niobium and titanium braze was attempted without the niobium pentoxide flux it was found that the metal alloy crawled and left the brazing area leaving an interrupted nonhermetically sealed connection between the tubulation and end cap.

As will be apparent from the foregoing, painting the area of the parts to be brazed with a slurry of niobium pentoxide (Nb_2O_5) provides for a substantially improved, vacuumtight brazed joint between the tantalum tubulation and the niobium end cap of a ceramic arc tube in connection with a niobium or niobium-titanium resistance brazing process.

What is claimed is:

1. The method of brazing tantalum to niobium for high temperature applications comprising the steps of: painting the juncture of the parts to be brazed with a slurry of Nb_2O_5; placing a 2 cc. brazing metal at the juncture of the parts to be brazed and heating the juncture to a temperature sufficient to cause complete alloying action between the tantalum, niobium brazing metal and the niobium.

2. The method according to claim 1 wherein said slurry comprises Nb_2O_5powder and an aqueous vehicle in a ratio of about 1 gram Nb_2O_5 to 2 cc. of vehicle.

3. The method according to claim 1 wherein said heating is accomplished by passing sufficient electric current through said tantalum to heat said niobium brazing metal above its melting point.

4. The method according to claim 3 wherein a titanium brazing metal is additionally positioned adjacent said niobium brazing metal and said alloying action includes said titanium brazing metal.

5. The method of providing a vacuumtight brazed joint between the tantalum exhaust and fill tubulation of a ceramic discharge lamp and a niobium end cap comprising the steps of: preparing a slurry of niobium pentoxide and a liquid to a pastelike consistency; inserting the tantalum tubulation through a close fit aperture in the niobium end cap; painting the juncture of the niobium end cap with the tantalum tubulation with the niobium pentoxide slurry; placing a niobium brazing ring about the tubulation at its juncture with the end cap and adjacent to the niobium pentoxide paint; heating the juncture to a temperature sufficient to cause complete alloying action between the tantalum, niobium brazing ring and the niobium.

6. The method according to claim 5 wherein a titanium brazing ring is placed about the tubulation adjacent said niobium brazing ring and said complete alloying action includes said titanium brazing ring therein.

7. The method according to claim 5 wherein said slurry comprises Nb_2O_5 powder and a liquid in a ratio of about 1 gram of Nb_2O_5powder to 2 cc. of liquid.

* * * * *

UNITED STATES PATENT OFFICE

CERTIFICATE OF CORRECTION

Patent No. 3,636,297 **Dated** January 18, 1972

Inventor(s) Willard M. Pakutka et al

It is certified that error appears in the above-identified patent and that said Letters Patent are hereby corrected as shown below:

Column 4, Line 26, "2 cc." should be changed to

-- niobium --.

Signed and sealed this 5th day of November 1974.

(SEAL)
Attest:

McCOY M. GIBSON JR.
Attesting Officer

C. MARSHALL DANN
Commissioner of Patents

UNITED STATES PATENT OFFICE

CERTIFICATE OF CORRECTION

Patent No. 3,636,297 Dated January 18, 1972

Inventor(s) Willard M. Pakutka et al

It is certified that error appears in the above-identified patent and that said Letters Patent are hereby corrected as shown below:

Column 4, Line 26, "2 cc." should be changed to

-- niobium --.

Signed and sealed this 5th day of November 1974.

(SEAL)
Attest:

McCOY M. GIBSON JR.
Attesting Officer

C. MARSHALL DANN
Commissioner of Patents

UNITED STATES PATENT OFFICE

CERTIFICATE OF CORRECTION

Patent No. 3,636,297 **Dated** January 18, 1972

Inventor(s) Willard M. Pakutka et al

It is certified that error appears in the above-identified patent and that said Letters Patent are hereby corrected as shown below:

Column 4, Line 26, "2 cc." should be changed to

-- niobium --.

Signed and sealed this 5th day of November 1974.

(SEAL)
Attest:

McCOY M. GIBSON JR.
Attesting Officer

C. MARSHALL DANN
Commissioner of Patents