May 20, 1947. J. C. O'CONNOR 2,420,793

VIBRATORY DRILLING APPARATUS

Filed June 9, 1944 2 Sheets-Sheet 1

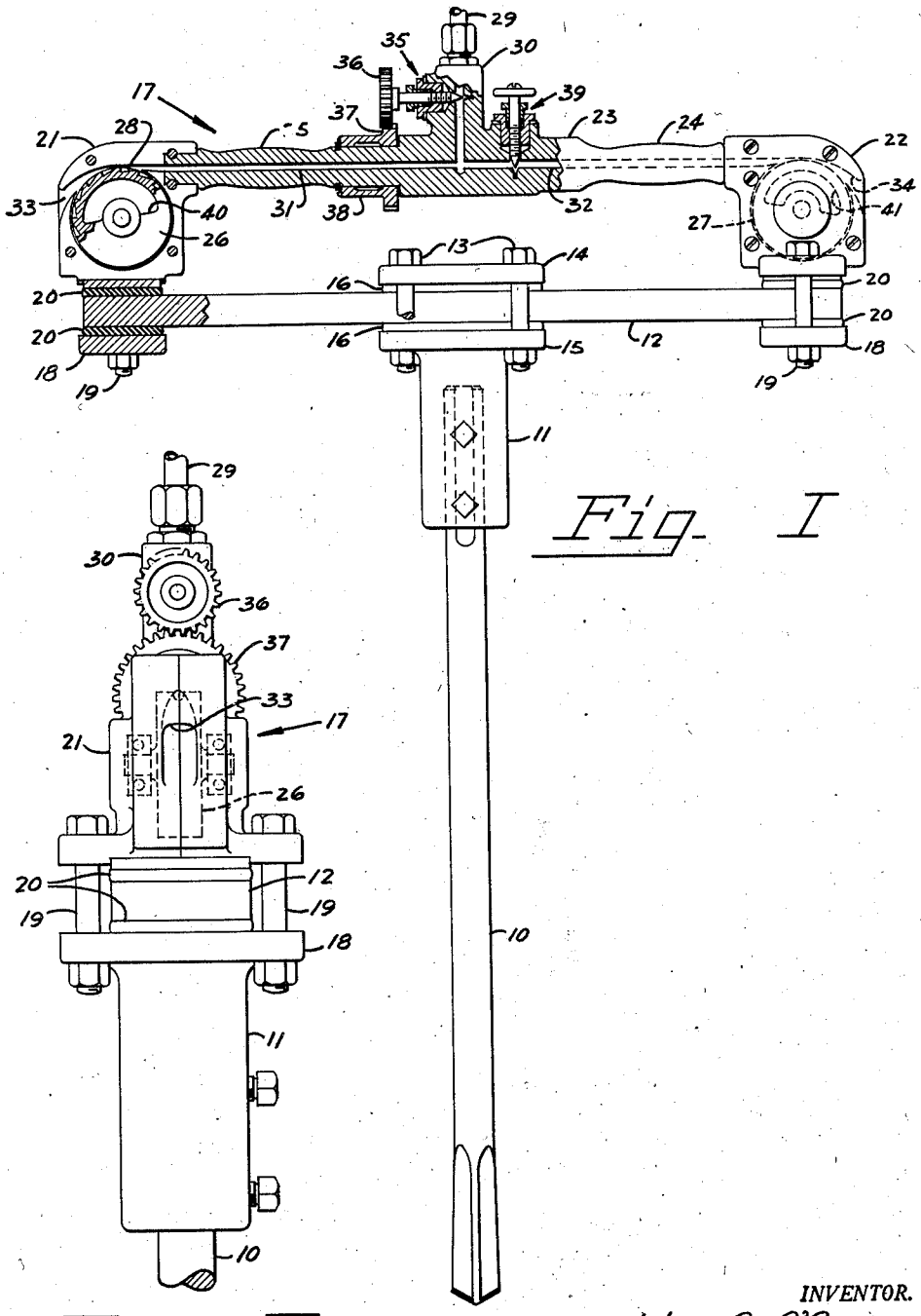

Fig. I

Fig. II

INVENTOR.
John C. O'Connor
BY
Marshall & Marshall
ATTORNEYS

May 20, 1947. J. C. O'CONNOR 2,420,793

VIBRATORY DRILLING APPARATUS

Filed June 9, 1944 2 Sheets-Sheet 2

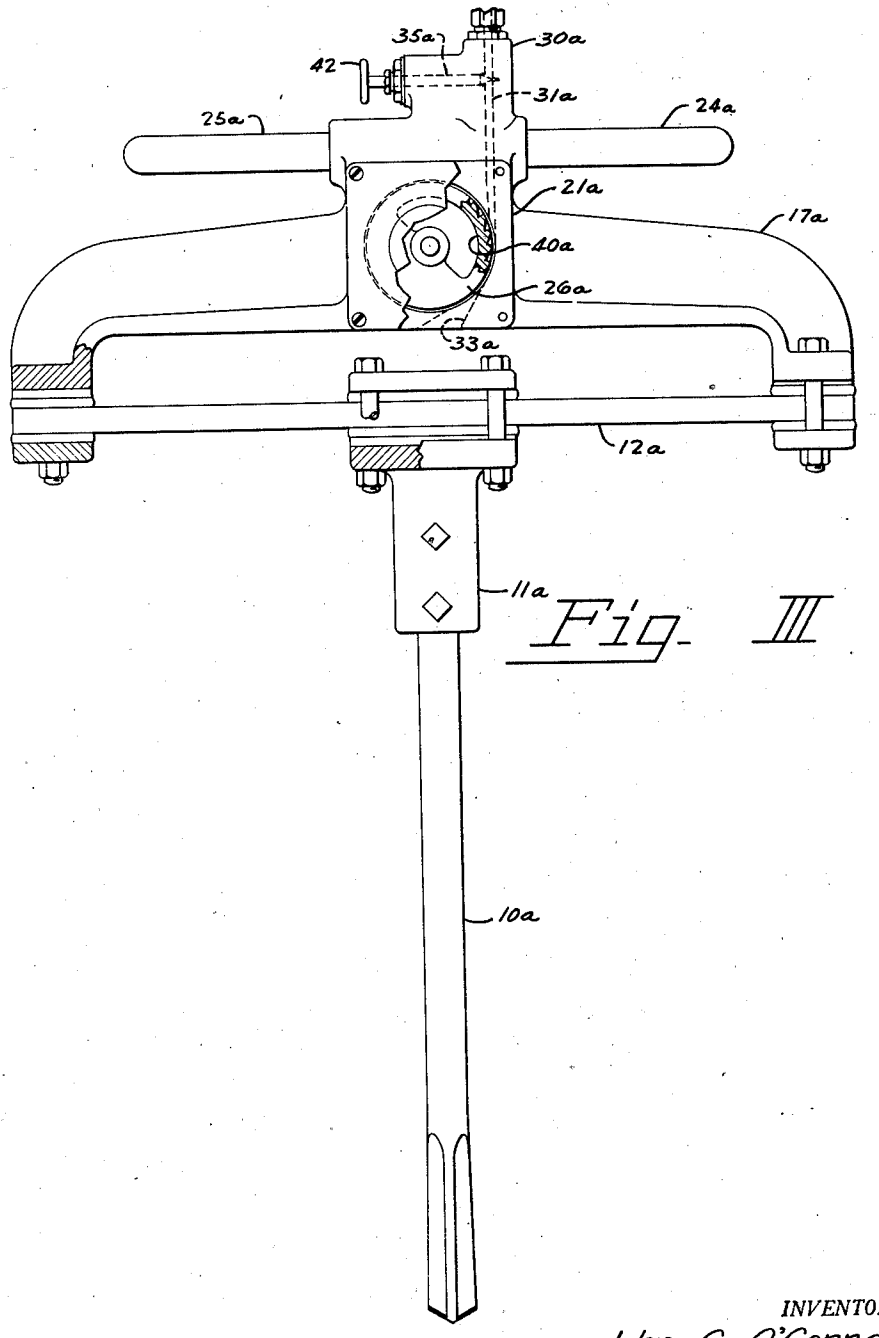

Fig. III

INVENTOR.
John C. O'Connor
BY
Marshall & Marshall
ATTORNEYS

Patented May 20, 1947 2,420,793

UNITED STATES PATENT OFFICE

2,420,793

VIBRATORY DRILLING APPARATUS

John C. O'Connor, Dayton, Ohio

Application June 9, 1944, Serial No. 539,587

5 Claims. (Cl. 259—1)

1

This invention relates to drilling and hammering apparatus employing vibratory motive power, and in particular to improvements in such apparatus which, by materially reducing the vibration of the frame of the apparatus, contribute to its efficiency and to the comfort of the operator.

Rock, concrete and similar hard brittle materials were originally drilled or shaped by chiseling, an operation in which the impact force of a hammer was transmitted through the sharpened end of a chisel to chip away small fragments of the material. Hand operation of the hammer was found to be laborious and slow in many operations so a power driven hammer was substituted for the hand operated hammer. While the power hammer speeded the work it was very disagreeable to use because no provision was made for reducing the vibration of its frame or isolating its vibration from its handles. This vibration is so severe that the average workman can not endure it for more than two or three hours at a time.

This is a continuation as to common subject matter of co-pending application Ser. No. 427,039 (which matured into United States Patent #2,353,492 granted July 11, 1944), disclosing a vibration producing mechanism designed to provide a violent vibratory motion of the workpiece while maintaining the supporting frame or base relatively quiescent.

The object of this invention is to provide a vibratory hammer which will produce a violent vibratory hammering action without materially vibrating the handles by which the hammer is supported and guided.

Another object is to provide a vibratory hammer in which the exposed portions with the exception of the part contacting the tool remains substantially at rest during operation.

Another object is to provide a hand held implement adapted to do work by vibration with a pair of oppositely rotating eccentrically loaded rotors and a resilient mounting for the work contacting member such that the horizontal components of force produced by the rotation of the eccentrically loaded rotors cancel each other and the vertical forces produced by the rotors are counterbalanced by the vibration of the work contacting member on the resilient mounting.

2

Another object is to provide a vibratory tool in which the material contacting member is resiliently mounted from the frame to form a vibratory system having a resonant frequency with means for applying a cyclical force to the frame of such frequency as to excite resonant vibration of the material contacting member without vibrating the frame itself.

These and other objects and advantages are apparent from the following description in which reference is made to the accompanying drawings.

In the drawings:

Figure I is a front elevation partly in section of a vibratory drill embodying the invention.

Figure II is a fragmentary side elevation of the drill shown in Figure I.

Figure III is a front elevation of a modified form of drill, parts being shown in section to reveal its construction.

These specific illustrations are intended to illustrate but not to define the invention.

Fundamentally the invention contemplates the application of the principle of the undamped vibration absorber to hand held percussive tools. The advantages attained by employing this principle are that a severe vibration may be set up in the working part without materially vibrating the connecting frame and handles. In the hand held percussive tool embodying the invention the active or working part of the tool is resiliently mounted to form an undamped vibration absorber and a vibratory force is intentionally applied to the frame. The vibrational energy is transferred through the frame and absorbed by the active part of the tool without producing objectionable vibration in the frame itself. Any means capable of applying a cyclical force to the frame at a frequency substantially equal to the resonant frequency of the resiliently mounted part of the tool may be used to excite the vibration.

This type of operation is very efficient because it makes use of the energy returned to the active part of the tool by the resiliency of the work. In any hammering operation there is no useful work done until the elastic limit of the material being worked is exceeded. Up to this limit the energy delivered is returned in the form of a recoil or bounce of the tool. In the tool embodying the invention this recoil is used to augment the suc-

ceeding stroke and, therefore, is not lost. The only energy lost is the work done beyond the elastic limit, i. e. the useful work.

Figure I of the drawings shows such a structure in which a multiedged chisel or star drill 10 is held in a chuck 11. The chuck 11 is clamped to the mid point of a resilient bar 12 by four bolts 13 securing a flat plate 14 above the bar 12 to an enlarged part 15 of the chuck 11 located below the bar. Pads 16, made of a resilient material, are interposed between the bar 12 and the adjacent surfaces of the flat plate 14 and the chuck 11.

The ends of the bar 12 are clamped to the extremities of a frame 17 by means of flat plates 18 and bolts 19. Resilient pads 20 are interposed between the bar 12 and the adjacent surfaces of the frame 17 and clamping plates 18.

The frame 17 comprises rotor housings 21 and 22 at its extremities and a connecting bar 23 connecting the housings 21 and 22. The bar 23 between the housings 21 and 22 is shaped to provide handles 24 and 25 by which the structure may be supported and guided.

Rotors 26 and 27 are journaled in the rotor housings 21 and 22 with their axes perpendicular to the plane containing the drill 10 and the bar 12. The rotors are driven by compressed air impinging on flutes 28 in their peripheries.

Compressed air to drive the rotors 26 and 27 is supplied through a pipe 29 connected to a valve chamber 30 extending at right angles from the center of and forming part of the connecting bar 23. From the valve chamber 30 the air is conducted along passages 31 and 32 extending through the handle portions 24 and 25 of the bar 23 to the rotors 26 and 27. After passing tangentially past the rotor peripheries the air exhausts through openings 33 and 34 of the rotor chambers 21 and 22. A needle valve 35, fitted into the valve body 30, controls the quantity of air admitted to the rotors. The outer end of the stem of the needle valve 35 carries a gear 36 which meshes with another gear 37 formed as a part of a thumb wheel 38 circumjacently mounted on the connecting bar 23 adjacent the handle portion 25. Thus the operator can readily control the amount of air without releasing his grip on the handles. The air passage 31 is made slightly smaller than the passage 32 or is provided with a fixed restriction in order that another needle valve 39, by restricting the air flow through the passage 32, may be used to equalize the air flow between the rotors to cause them to operate at the same number of revolutions per minute.

The rotors 26 and 27 are unbalanced by semiannular cut outs 40 and 41 so that when they are rotating they produce a vibratory force in the frame 17 and are driven in opposite directions to produce a pulsating translatory rather than a rotating force. For convenience in description the unbalanced weight of the rotors 26 and 27 may be represented by vectors. The pulsating force applied to the frame is a maximum when these vectors are parallel and directed in the same direction and is a minimum or zero when the vectors are parallel and directed in opposite directions. The line of action of the pulsating force applied to the frame 17 is along and in the same direction as the line of the vectors when they are parallel and are directed in the same direction.

In the structure described the frame 17 with the other elements attached to it may be considered a free body in space and consequently vibrates according to the force produced by the unbalance of the rotating rotors.

If the structure were rigid in space instead of being a free body there would be no coupling between the rotors tending to cause them to assume a definite phase relation with each other much less run at the same speed. However, since the structure is a free body its motion in response to the rotating unbalance produces synchronizing forces which tend to hold the rotors in definite phase relationship with each other. The mechanics of this synchronization are apparent when one remembers that a pendulum may be kept in motion by a small properly timed horizontal movement of its support and that in like manner a wheel having an unbalanced weight may be kept in continuous rotation by a reciprocatory translatory motion applied perpendicularly to its axis of rotation. If in the structure under consideration, the unbalance of one of the rotors is predominantly greater than that of the other it will in general produce a rotary and translatory motion at the axis of rotation of the second rotor, tending to maintain the second rotor in synchronism with the first. Further, if the rotors are located at or near the centers of percussion of the structure translatory motion only along a line connecting the rotors is produced at one axle in response to the rotary force at the other axle. The centers of percussion of a body are those conjugate points located on a line through the center of gravity of the body, to one of which a transverse force may be applied without producing a translatory reaction at the conjugate point. The reaction to a rotary force applied to one center of percussion therefore reduces to a translatory force acting along the line through the centers of percussion. Thus the actual structure in regards to synchronizing forces between the rotors behaves much as if it were limited to motion in one direction only. If the line of action of the pulsating force is not perpendicular to the line connecting the rotors, which is assumed to be horizontal, a horizontal component of force is produced. This horizontal component produces a horizontal motion of the structure which in turn reacts on the rotors tending to synchronize them. For example suppose the vectors representing the rotor unbalances are directed upwardly and to the right at an angle of approximately 45° when they pass through parallelism and that the rotor at the right hand end of the structure is rotating clockwise and the other rotor is rotating counterclockwise. At the assumed instant the frame has a maximum displacement to the left and is just starting toward the right. The resulting motion is in such direction as to feed energy into the left hand rotor tending to increase its speed and to take energy from the right hand rotor. Thus synchronizing forces are set up which produce differential speed changes in such direction as to cause the rotating unbalances to pass through parallelism when they are directed vertically up or down. This is the desired condition as it produces maximum vibration of the tool. It is of interest that the synchronizing force is zero when the line of action of the pulsating force is horizontal. However, in this case the equilibrium is unstable and any slight change in phase is immediately increased until synchronism is reached with the line of the force perpendicular to the horizontal line. Thus, by proper proportioning

the structure, it is made self-synchronizing with a minimum of complications.

The vertical vibrational forces produced by the synchronized rotors are absorbed by the tuned vibratory system made up of the resilient bar 12 and the chuck 11. To absorb these forces it is necessary that the natural frequency of the tuned system and the speed of the rotors be substantially equal. This condition is attained by adjustment of the needle valve 35.

In the interest of securing as broad an operating range as possible it is desirable that the weight of the structure be divided in generally equal amounts between the frame, comprising the rotor housings and the connection, and the chuck with or without the drill. If the drill is rigidly attached its weight adds to the chuck, if it is loosely mounted its weight does not add and the chuck weight may be increased accordingly.

If a horizontal vibration of the frame is not objectionable one of the rotors may be eliminated and the other placed in the center of the frame. Figure III shows a structure so modified. In the modified structure a star drill 10*a* is mounted in a chuck 11*a* which in turn is clamped to a resilient bar 12*a* forming part of the vibratory tool. The ends of the bar 12*a* are clamped to the extremities of a frame 17*a*. The center of the frame 17*a* is enlarged and transversely bored to form a rotor housing 21*a*. Immediately above the rotor housing 21*a* a pair of handles 24*a* and 25*a* are fitted into the frame 17*a* and extend substantially parallel thereto. A rotor 26*a* is mounted in the rotor housing 21*a* and is driven by compressed air supplied through a pipe connected to a valve chamber 30*a* forming the upper part of the frame 17*a*. A passage 31*a* through the valve chamber and the frame 17*a* directs the compressed air against the fluted periphery of the rotor 26*a*. After passing the rotor the air exhausts through an opening 33*a* in the bottom of the rotor housing 21*a*. A needle valve 35*a* provided with a thumb wheel 42 controls the amount of air admitted to the rotor.

The rotor 26*a* is unbalanced by a cutout portion 40*a* so that when rotating it applies a cylical force to the frame 17*a*. In normal operation, the speed of the rotor is adjusted to equal the natural or resonant frequency of the vibratory system comprising the star drill 10*a*, the chuck 11*a* and the resilient bar 12*a*. When resonance is attained the vertical forces applied to the frame 17*a* by the rotating unbalance are neutralized and absorbed by the forces applied to the frame by the deflection of the spring or resilient bar 12*a*. Under these operating conditions there is practically no vertical vibration of the frame 17*a* and therefore no vertical vibrations of the handles 24*a* and 25*a*.

Because the method of holding the star drill or other tool in the chuck 11 or 11*a* does not constitute a part of the present invention a simplified mounting has been shown. It is to be understood that the star drill or tool may be rigidly clamped in the chuck such that it partakes of the vibratory motion or it may be loosely mounted so that it remains substantially stationary and the chuck vibrates or hammers against it. The first type of mounting, i. e. the rigid mounting, is preferable when the drill is operating in a very hard and brittle material and there is no friction between the drill and the work. The second type of mounting is preferable when drilling materials which are not only hard but also tough

as for example when drilling or spading into hardpan or clay. In the latter case it would be impossible to operate a vibratory drill with a rigid connection because practically all the energy would be wasted in friction between the drill and the sides of the hole. While the invention has been shown with regards to a star drill it is also applicable as a riveting hammer, a tamper, or in fact any operation requiring a rapid series of hammer blows.

Having described my invention, I claim:

1. In a device of the class described, in combination, a vibration transmitting member, to be held in an operator's hands, a tool operating member, resilient means for connecting said members and resisting relative movement therebetween, and a cyclically vibrating mass carried by said vibration transmitting member, said mass by its vibration applying to said vibration transmitting member forces at all times equal and opposite to forces applied to said vibration transmitting member by relative movement between said members as transmitted through said resilient means.

2. In a device of the class described, in combination, a vibration transmitting member equipped with handles, a tool actuating member, resilient means for connecting said tool actuating member to said vibration transmitting member and for resisting relative movement therebetween, a cyclically vibrating mass carried by said vibration transmitting member, and means mounted in said vibration transmitting member for vibrating said mass, said mass by its vibration applying to said vibration transmitting member only forces at all times equal and opposite to forces applied to said vibration transmitting member by relative movement between said members as transmitted through said resilient means.

3. In a device of the class described, in combination, a vibration transmitting member equipped with handles, a tool actuating member, resilient means for connecting said tool actuating member to said vibration transmitting member and for resisting relative movement therebetween, a cyclically vibrating mass carried by said vibration transmitting member, and means mounted in said vibration transmitting member for vibrating said mass, said mass by its vibration applying to said vibration transmitting member only forces at all times equal and opposite to forces applied to said vibration transmitting member by relative movement between said members as transmitted through said resilent means, whereby said vibration transmitting member is maintained substantially quiescent.

4. In a device of the class described, in combination, a handle, a tool holding chuck, resilient means for connecting said handle and said chuck and for resisting relative movement therebetween, and a cyclically vibrating mass carried by said handle, said mass by its vibration applying to said handle forces at all times equal and opposite to forces applied to said handle by relative movement between said handle and said chuck as transmitted through said resilient means.

5. In a device of the class described, in combination, a handle, a tool holding chuck, laterally extending transversely vibratory resilient means for connecting said handle and said chuck and for resisting relative movement therebetween, and a cyclically vibrating mass carried by said

handle, said mass by its vibration applying to said handle forces at all times equal and opposite to forces applied to said handle by relative movement between said handle and said chuck as transmitted through said resilient means.

JOHN C. O'CONNOR.

REFERENCES CITED

The following references are of record in the file of this patent:

UNITED STATES PATENTS

Number	Name	Date
955,339	Lumsden	Apr. 19, 1910
2,102,603	Pinazza	Dec. 21, 1937
1,927,075	Thomas	Sept. 19, 1933
2,142,237	Canady	Jan. 3, 1939
2,353,492	O'Connor	July 11, 1944
1,093,120	Fisher	Apr. 14, 1914
2,176,801	Pinazza	Oct. 17, 1939

FOREIGN PATENTS

Number	Country	Date
853,439	France	Mar. 19, 1940