J. P. WILSON.

HOLDER AND DASH FASTENER.

APPLICATION FILED DEC. 29, 1915.

1,192,251. Patented July 25, 1916.

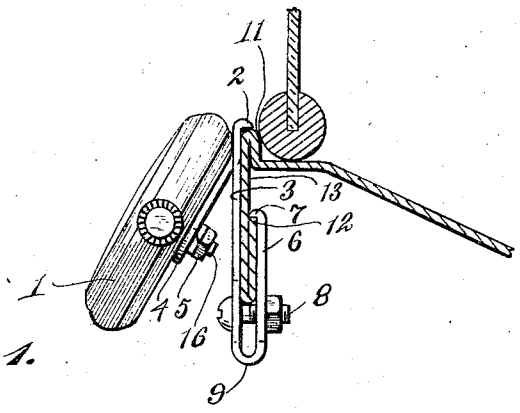

Fig. 1.

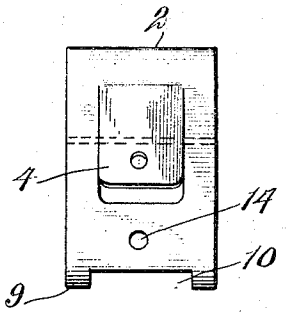

Fig. 2.

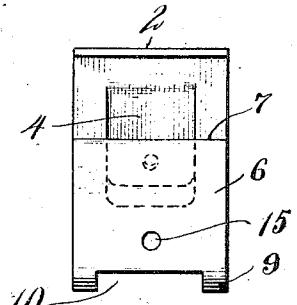

Fig. 3.

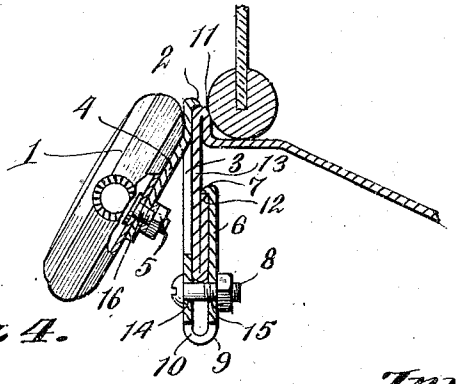

Fig. 4.

Witnesses:
Ida Shaver
Fred S. Bradley

Inventor:
J. P. Wilson

UNITED STATES PATENT OFFICE.

JOSEPH P. WILSON, OF OGDENSBURG, NEW YORK.

HOLDER AND DASH-FASTENER.

1,192,251. Specification of Letters Patent. Patented July 25, 1916.

Application filed December 29, 1915. Serial No. 69,282.

To all whom it may concern:

Be it known that I, JOSEPH P. WILSON, a citizen of the United States, residing at Ogdensburg, in the county of St. Lawrence and State of New York, have invented a certain new and useful Holder and Dash-Fastener, of which the following is a full, clear, and exact description.

My invention relates to a holder and dash fastener adapted for holding a device such as a clock or other appliance that can be attached to vehicles, particularly automobiles, and is applicable to any make of automobile which has a suitable dash or facilities for its attachment thereto, either by using the device as set forth in the accompanying drawings or with modification in which the spirit of the invention is not departed from.

The object of my invention is to provide at a low cost of manufacture simple and effective means for quickly and rigidly attaching a clock or other device to an automobile in a suitably conspicuous and secure manner and at a suitable angle to the gaze of an occupant by utilizing an established dash projection and without the necessity of moving other parts to make room.

Another object of my invention is to provide means for quickly attaching the device to the dash projection without any drilling of holes or other mutilation of the automobile.

I attain these objects by the construction illustrated on the accompanying drawing in which—

Figure 1 shows a side view of my appliance, a cowl dash of a particular type with the lower glass wind shield and the housing therefor being in section. Fig. 2 is a front view of the base fastening body. Fig. 3 is a rear view thereof, opposite to Fig. 2. Fig. 4 is a side view of my appliance in section, a portion of the watch case being in part broken away showing the watch fastening means, and being otherwise substantially the same as the device illustrated in Fig. 1.

In the preferred form of my invention Fig. 1 shows a watch 1 attached to a projection 4 which extends at an angle from the member 3. Suitable means 5 are employed to fasten said watch to said projection 4 such as a threaded member through the hole 16.

My appliance when placed in position to fasten to the dash projection is as shown in Figs. 1 and 3.

The tooth 2 contained on the member 3 Fig. 1 fits into the recess 11 which is contained on the dash projection 13 as shown in Figs. 1 and 3. The tooth 7 contained on the member 6 fits into the recess 12, said recess 12 being formed by the turned up end of the dash projection 13 as shown in Figs. 1 and 3.

When the tightening or clamping means 8 Fig. 1 is actuated the two members 3 and 6 which contain the teeth or projections 2 and 7 respectively, move together and grip the dash projection. The bottom or crotch 9 is in part cut away as indicated by 10 Fig. 2 and Fig. 3 to provide easier resiliency, the teeth 2 and 7 engaging the recesses 11 and 12 which are contained on the dash projection 13 thereby making a secure and rigid fastening and support for the watch or other appliance which is attached thereto.

Having thus described my invention what I claim as new and desire to cover by Letters Patent is:

1. A device of the type described comprising a fastening body construction including a support for an instrument thereon, spaced fastening members formed integrally having engaging projections on their upper terminals disposed to engage separated recesses contained on a dash projection, means to clamp said fastening body to the said dash projection, and means to bind the said instrument on the said support.

2. A holder and dash fastener comprising a fastening body and a support for an instrument thereon, said fastening body having a member with a tooth which is adapted to engage a recess and the part adjacent contained on the rear of the described dash projection, the said recess being formed by the turned up end of the said dash projection, and means to fasten the said member to the said dash projection.

3. A device of the character described having an integral bracket tongue struck from one of the fastening members, and being positioned between a fastening projection (as indicated by 2) and a fastening means (as indicated by 8) contained on the said fastening member.

4. A holder and dash fastener comprising a fastening body construction and a support for a device thereon, toothed projections on the fastening body members which grip a dash projection more securely than the body of the fastening members, an angular pro-

jection extending from one of said members adapted to support a device at a relative angle, means for securing said device to said angular projection, and means for actuating the fastening body members to clamp to the said dash projection.

5. A holder and dash fastener of the described kind comprising fastening members which fasten to an established automobile dash projection, and a support for a device thereon, said fastening members extending upward from a fastening means contained thereon, teeth on the terminals of said fastening members that engage recesses of varying heights contained on the front and rear of a vertical dash projection, means for actuating said fastening members to engage the said recesses and to clamp to the said dash projection, and means for securing said device to said support.

6. A fastening device and instrument holder of the described character adapted to fasten to an automobile dash projection, comprising a fastening body formed into a U shaped body, one terminal of the said U shaped body being formed longer than the other, securing elements contained on the terminals, means to fasten the said U shaped body to the said dash projection, and means to fasten the said instrument to the said holder.

7. An instrument holder and dash fastener comprising a U shaped body having terminals of varying lengths and having gripping projections on their end portions, the bottom of said U shaped body having a removed section to provide resiliency, means to secure the said U shaped body to a dash projection, means to secure an instrument thereon.

8. A fastening device of the described character comprising a U shaped body adapted to fasten to a dash and support an instrument thereon, one terminal of the said U shaped body being of a shorter length than the other terminal, securing elements contained on the terminals, means to actuate the said U shaped body to clamp to a dash projection and means to fasten an instrument to the said support.

In testimony whereof I have hereunto set my hand this 17th day of November, 1915, in the presence of two subscribing witnesses.

J. P. WILSON.

Witnesses:
J. Leo Delaney,
Ida Shaver.