US00D962017S

(12) **United States Design Patent** (10) **Patent No.: US D962,017 S**
Lu (45) **Date of Patent: ** Aug. 30, 2022**

(54) **CUTTING MACHINE**

(71) Applicant: **Zhejiang Fullstar Houseware Co., Ltd.**, Taizhou (CN)

(72) Inventor: **Congqiang Lu**, Taizhou (CN)

(**) Term: **15 Years**

(21) Appl. No.: **29/740,524**

(22) Filed: **Jul. 6, 2020**

(30) **Foreign Application Priority Data**

Feb. 20, 2020 (CN) 202030056009.0

(51) **LOC (13) Cl.** **07-04**

(52) **U.S. Cl.**
USPC **D7/674**; D7/678

(58) **Field of Classification Search**
USPC D7/672–678, 357, 693–696, 683, 372
CPC B26D 3/185; B26D 3/26; B26D 3/283; B26D 3/285; A47J 43/25; A47J 43/20
See application file for complete search history.

(56) **References Cited**

U.S. PATENT DOCUMENTS

D330,316 S * 10/1992 So D7/678
D548,025 S * 8/2007 Kaposi D7/672
D578,838 S * 10/2008 Hood D7/678
D618,517 S * 6/2010 Wong D7/672
D729,595 S * 5/2015 Hauser D7/693
D730,704 S * 6/2015 Repac D7/672
D770,868 S * 11/2016 Repac D7/672
D776,495 S * 1/2017 Repac D7/672
D823,075 S * 7/2018 Repac D7/672
D873,627 S * 1/2020 Chen D7/672
D929,825 S * 9/2021 Lu D7/678
D931,692 S * 9/2021 Lu D7/678
D935,831 S * 11/2021 Lu D7/372
2015/0345200 A1* 12/2015 Repac B26D 3/185 241/84.3
2016/0302620 A1* 10/2016 Repac B26D 3/185

OTHER PUBLICATIONS

Brieftons Quickpush Food Chopper, Oct. 14, 2019, Amazon, https://www.amazon.com/Brieftons-QuickPush-Chopper-Extra-Large-Vegetables/dp/B07Z32XV3W (Year: 2019).*
Fullstar Vegetable Choppper, Nov. 21, 2017, Amazon, https://www.amazon.com/Vegetable-Chopper-Spiralizer-Slicer-Choppers/dp/B0764HS4SL (Year: 2017).*
Chugod, Vegetable Slicer Dicer, Dec. 19, 2016, Amazon, https://www.amazon.com/Vegetable-Slicer-WEINAS-Chopper-Cutter/dp/B01N5H1QD2 (Year: 2016).*
(Continued)

Primary Examiner — Brett Miller

(57) **CLAIM**

The ornamental design for a cutting machine, as shown and described.

DESCRIPTION

FIG. **1** is a first perspective view of a cutting machine showing my new design;
FIG. **2** is a second perspective view thereof;
FIG. **3** is a front view thereof;
FIG. **4** is a back view thereof;
FIG. **5** is a left side view thereof;
FIG. **6** is a right side view thereof;
FIG. **7** is a top view thereof;
FIG. **8** is a bottom view thereof; and,
FIG. **9** is a perspective view of another state of the cutting machine thereof.
The broken lines shown in the drawings depict portions of the cutting machine in which the design is embodied that form no part of the claimed design.

1 Claim, 9 Drawing Sheets

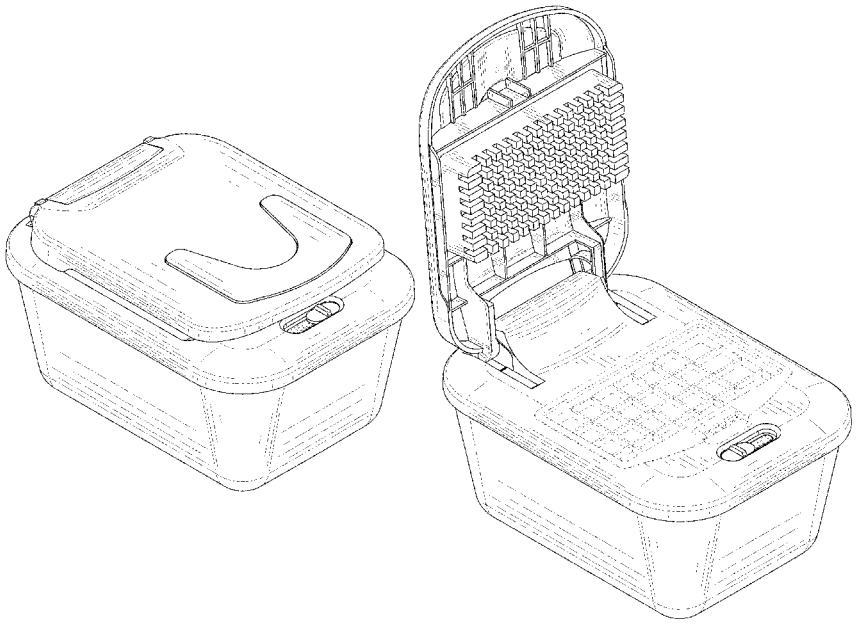

(56) **References Cited**

OTHER PUBLICATIONS

OXO Good Grips Vegetable and Onion Chopper, Feb. 8, 2016, Amazon, https://www.amazon.com/OXO-Grips-Vegetable-Chopper-Opening/dp/B01BKWJ86l (Year: 2016).*
Mangetai, Mandolin Vegetable Slicer, Jun. 12, 2018, Amazon, https://www.amazon.com/Mandolin-Vegetable-Multi-function-Chopper-Cucumber/dp/B07DP1P7FX/ (Year: 2018).*

* cited by examiner

FIG. 1

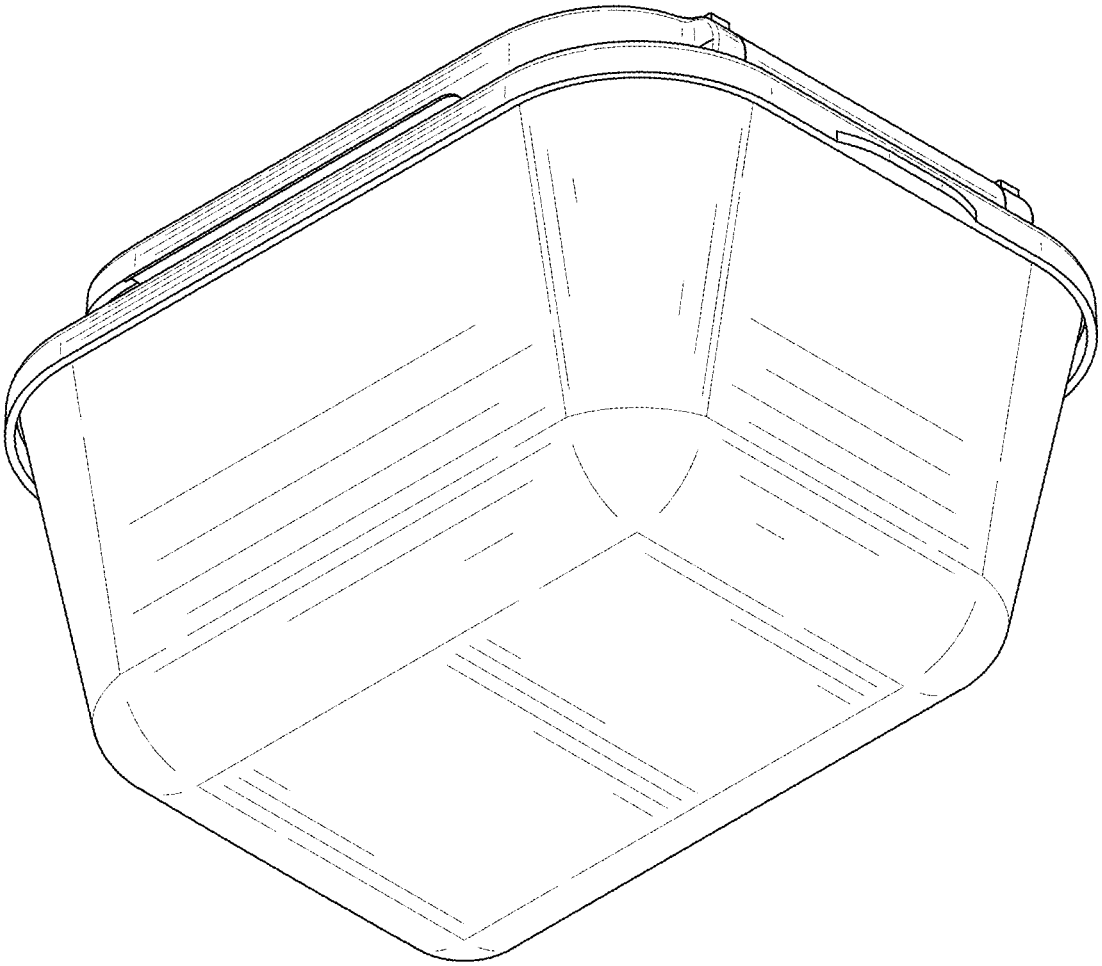

FIG. 2

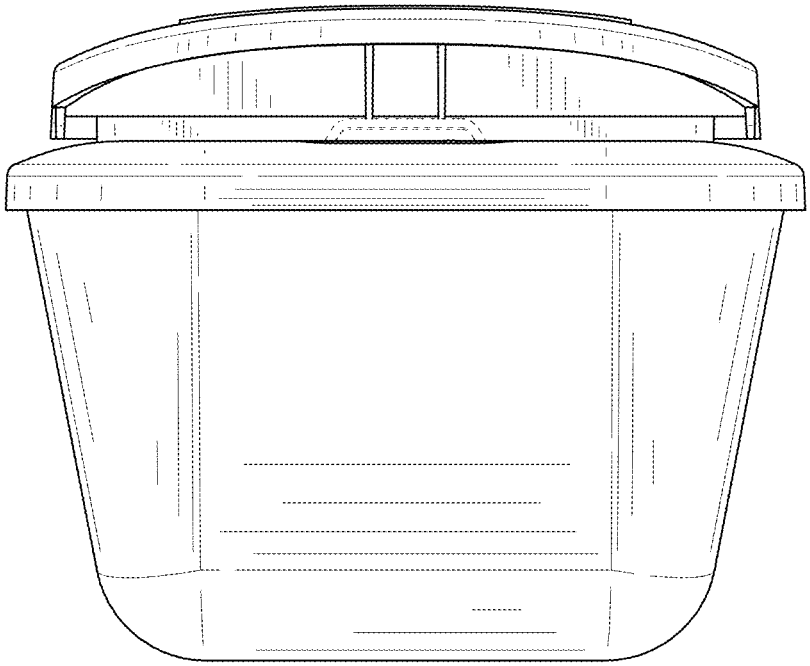

FIG. 3

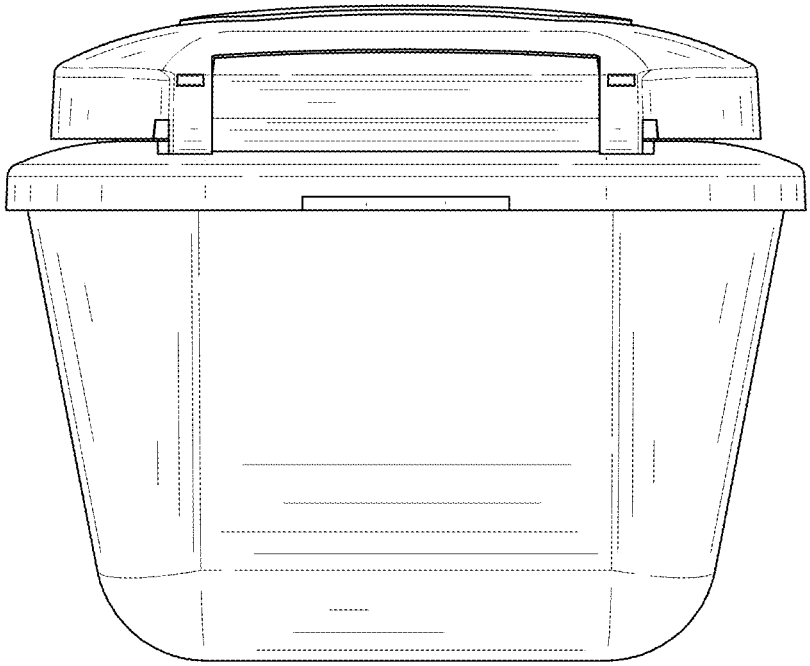

FIG. 4

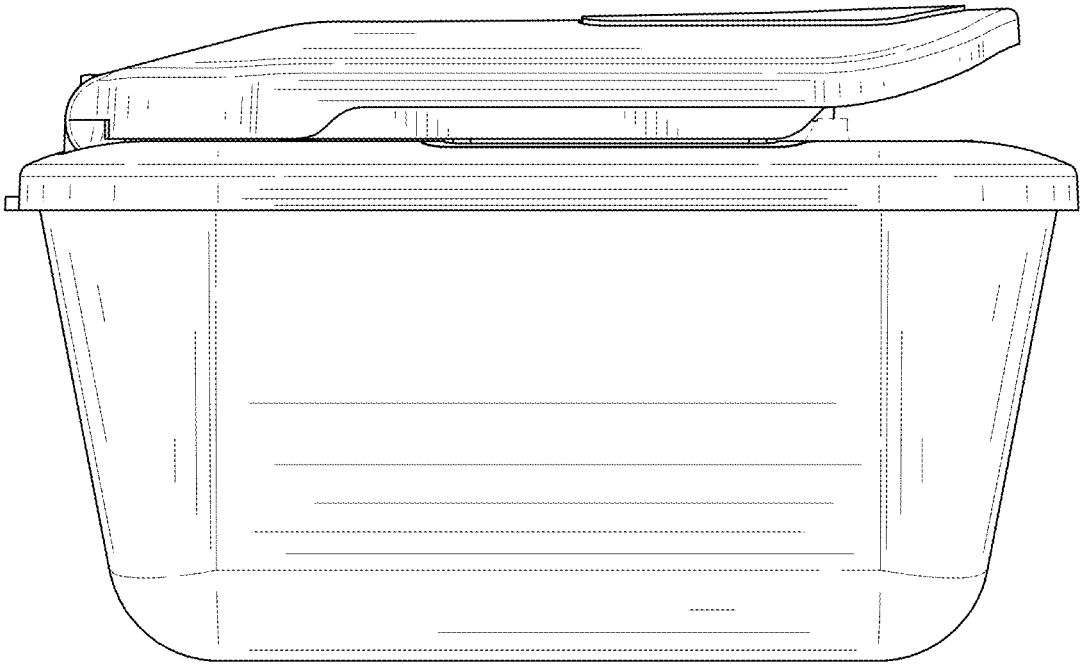

FIG. 5

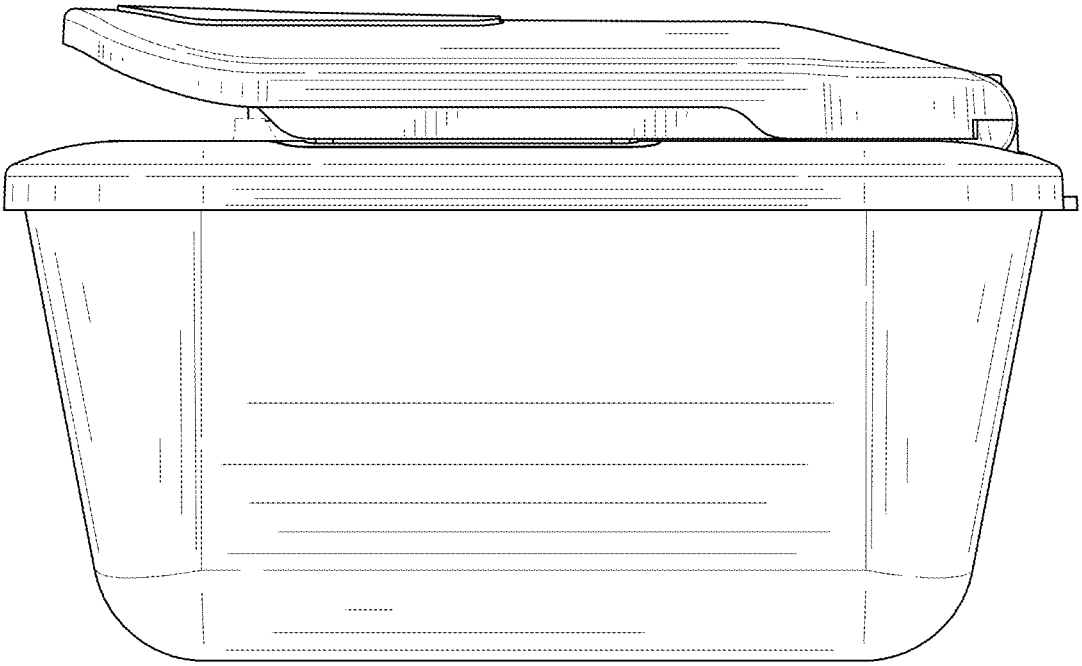

FIG. 6

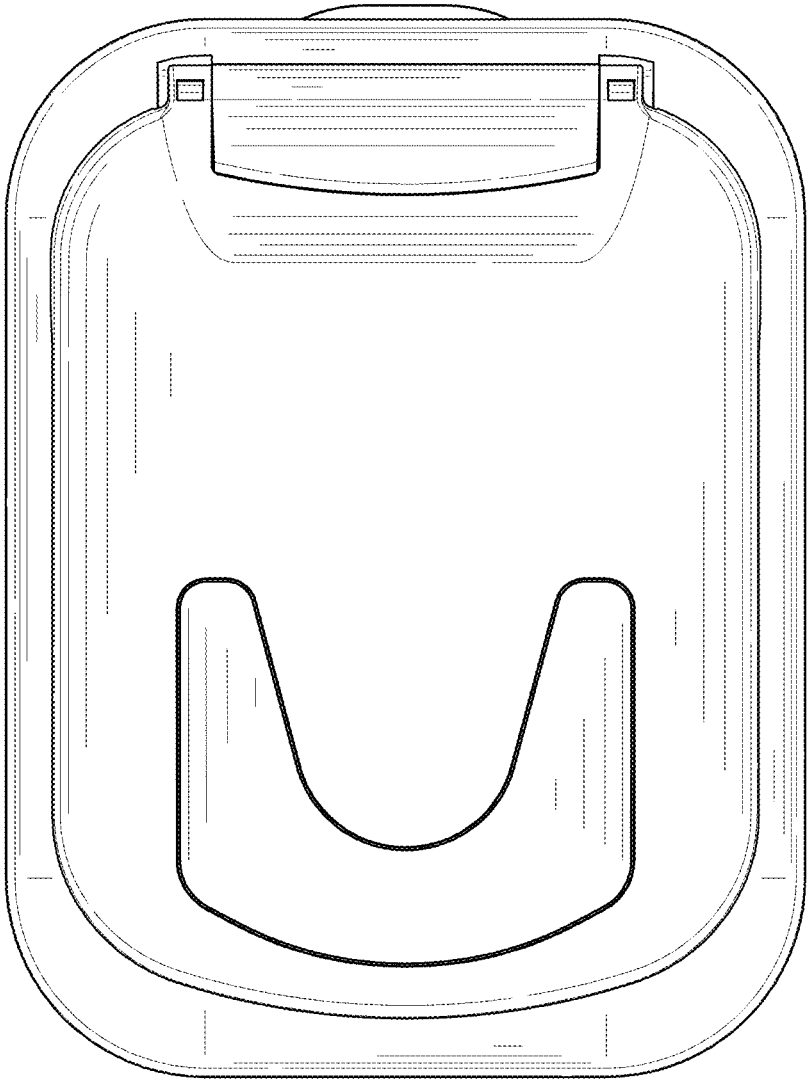

FIG. 7

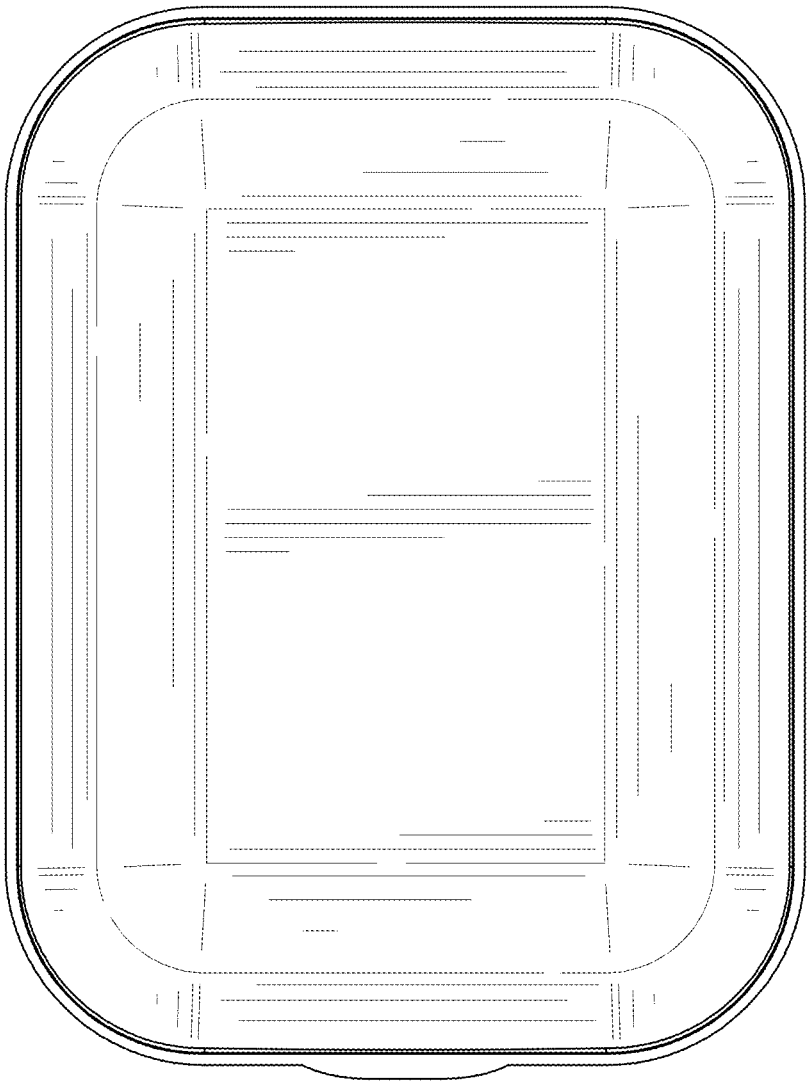

FIG. 8

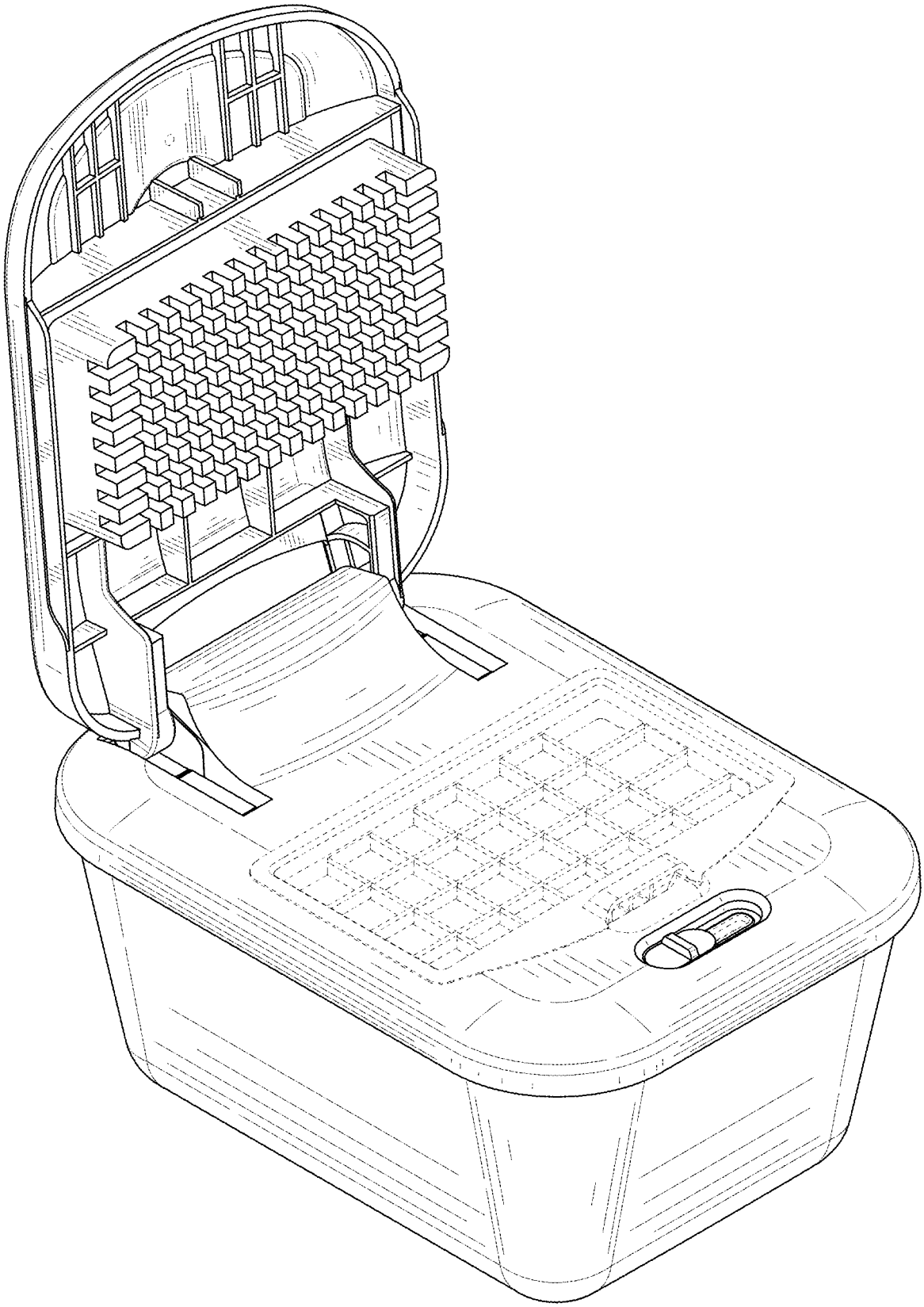

FIG. 9