United States Patent [19]

Engel et al.

[11] **3,805,423**

[45] **Apr. 23, 1974**

[54] **BI-METAL RIPPER TIP FOR DIGGING TEETH**

[75] Inventors: **Henry L. Engel**, New Lenox; **Eugene L. Helton**, Peoria; **Willard O. Kaarlela**, Chillicothe, all of Ill.

[73] Assignee: **Caterpillar Tractor Co.**, Peoria, Ill.

[22] Filed: **Aug. 23, 1972**

[21] Appl. No.: **283,067**

Related U.S. Application Data

[63] Continuation-in-part of Ser. No. 50,231, June 26, 1970, abandoned.

[52] **U.S. Cl.** ..... **37/142 R**, 172/719, 175/410

[51] **Int. Cl.** **E02f 9/28**

[58] **Field of Search** ..... 37/141 R, 141 T, 142 R, 37/142 A; 175/410; 172/719

[56] **References Cited**

UNITED STATES PATENTS

3,286,379	11/1966	Bewetti	37/142 A
1,835,701	12/1931	Edmunds	37/142 R
2,608,111	8/1952	Ratkowski	37/142 R
1,815,649	7/1931	Edmunds	37/142 R
2,051,234	8/1936	Wiese	172/719
1,834,391	12/1931	Edmunds	37/142 R
2,987,838	6/1961	Stratton	37/142 A
1,867,871	7/1932	Birkenbeuel	37/142 R
1,960,879	5/1934	Russell et al.	37/142 R
1,395,048	10/1921	McKee	37/142 R
1,927,818	9/1933	Brodersen	37/142 R X
2,549,088	4/1951	Hettelsater et al.	37/142 R X

Primary Examiner—Robert E. Pulfrey
Assistant Examiner—Eugene H. Eickhholt
Attorney, Agent, or Firm—Tjensvold, Phillips & Lempio Fryer

[57] **ABSTRACT**

A tip for an earth engaging tooth has at least one cavity extending longitudinally along at least the upper forward portion of the tip and which is occupied by an insert composed of a material having greater hardness than the rest of the tip, either initially or after working at elevated temperatures. The hard insert is bonded in the cavity by electron beam welding, brazing or the like and substantially increases wear resistance of the tip. The configuration and position of the cavity and insert provides for both wear resistance and structural strength utilizing a minimum of the high cost hard material and provides for relieving stress concentrations on the relatively brittle hard material.

1 Claim, 6 Drawing Figures

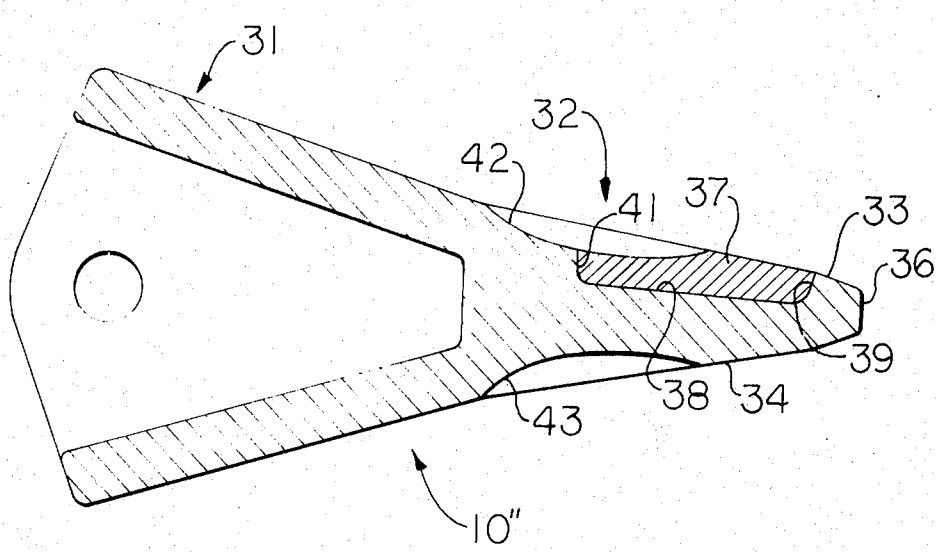

Fig. 1.

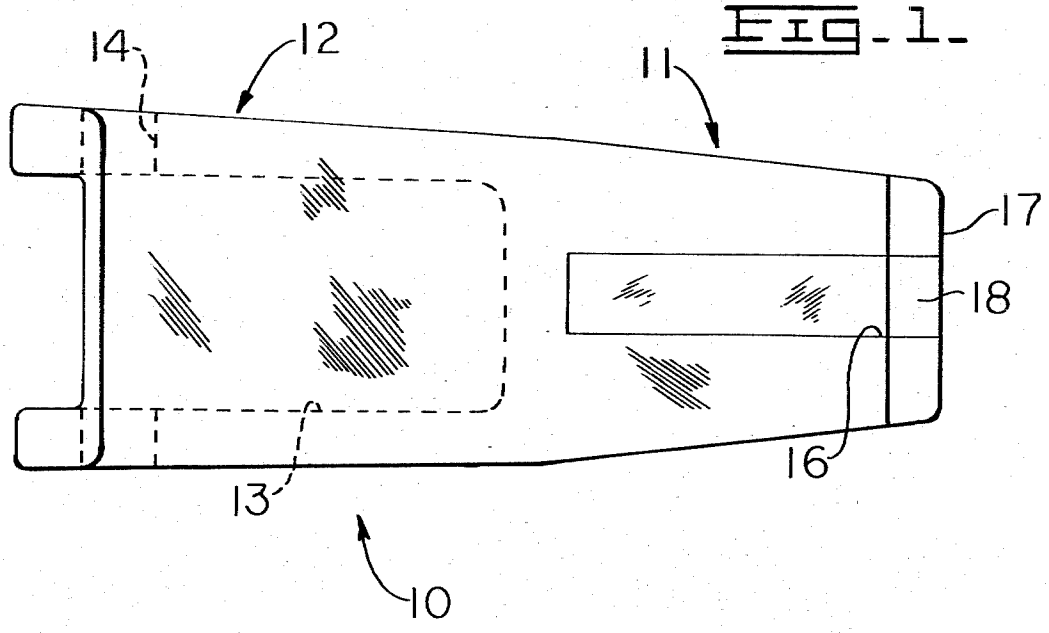

Fig. 2.

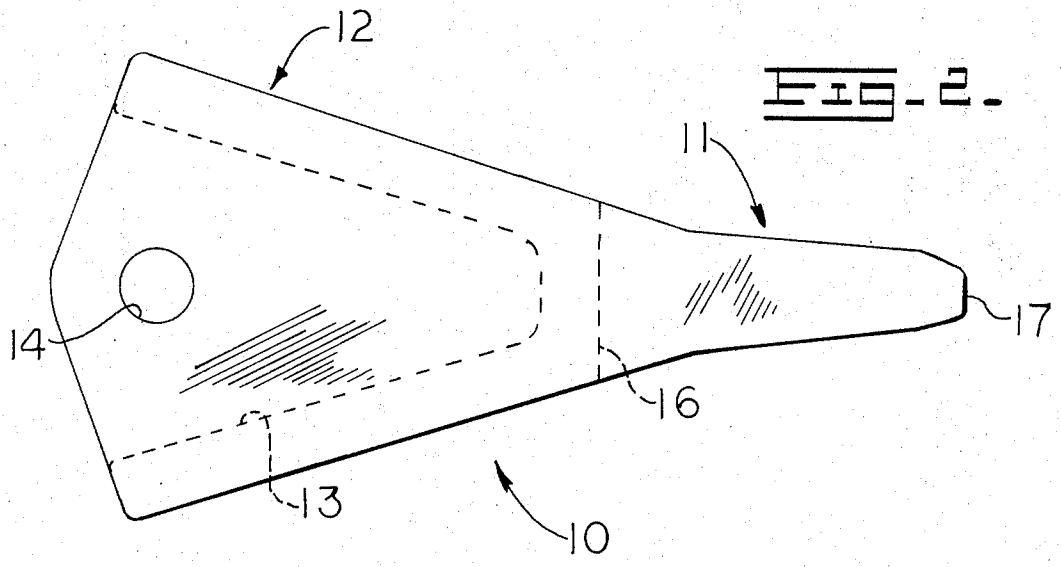

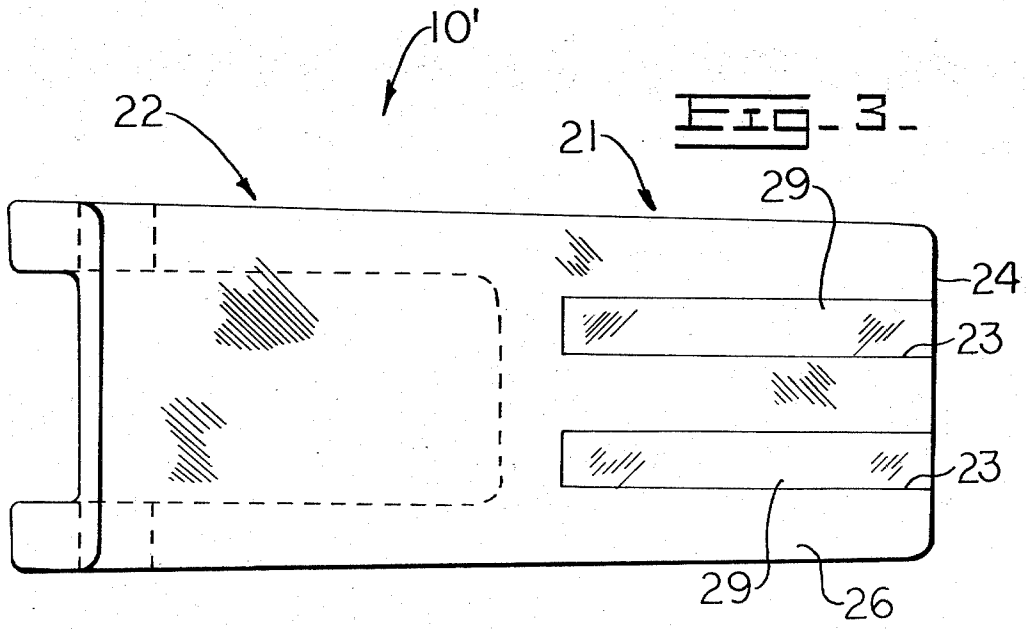

Fig-3-

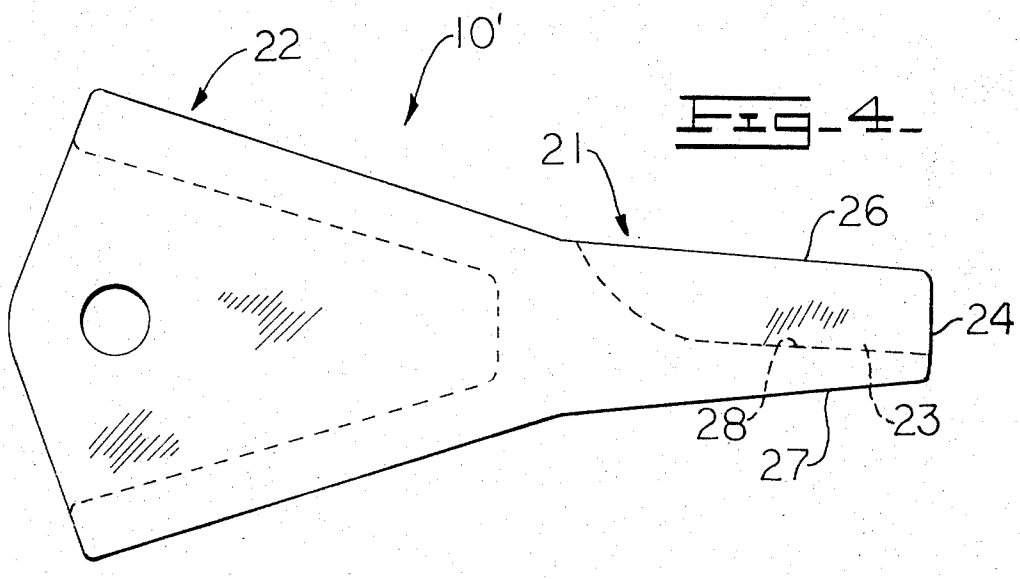

Fig-4-

Fig -5-

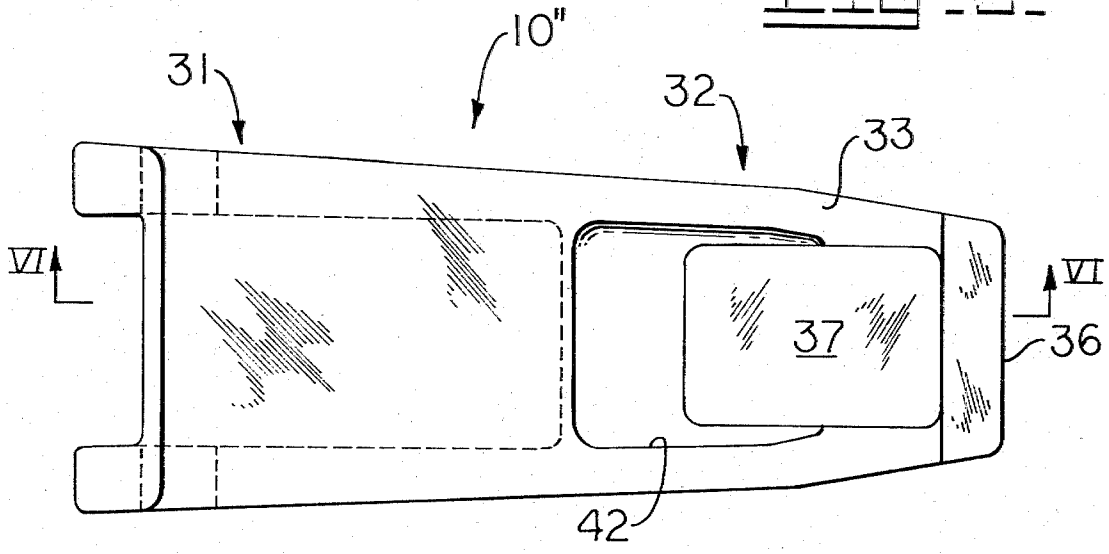

Fig -6-

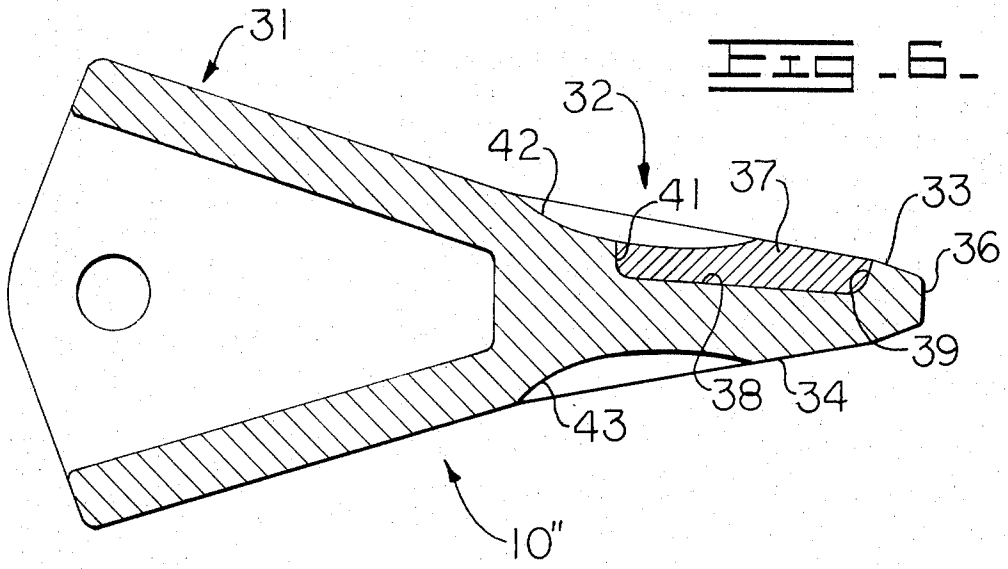

BI-METAL RIPPER TIP FOR DIGGING TEETH

CROSS-REFERENCE TO RELATED APPLICATION

This application is a continuation-in-part of copending U.S. Pat. application Ser. No. 50,231, now abandoned of the present Applicants filed June 26, 1970 and entitled "Bi-Metal Ripper Tip".

BACKGROUND OF THE INVENTION

This invention relates to digging teeth used on earthworking apparatus and the like for penetrating and ripping earth and more particularly to replaceable tips for digging teeth.

Many earthmoving machines such as rippers, scarifiers and loader buckets, employ earth engaging teeth to penetrate and break up hard materials to be excavated. Such teeth typically have a replaceable tip for engaging the earth, which may be readily removed and replaced when it has become worn from extended use. Although it is necessary to replace only the tip after it has become worn, the expense and time involved in such tip replacement is nevertheless significant. The present invention is concerned with decreasing the wear and increasing the life of such tips.

In the past, the choice of material for the construction of digging teeth tips has been affected by several considerations. Harder materials are usually more expensive than softer materials, both in the initial cost and in the fabrication and machining thereof. Accordingly, the cost of such tips increases rapidly with the hardness of the material used. Thus, it is economically desirable not to use a tip that is harder than necessary for the particular job anticipated, taking into consideration the rate at which harder and softer materials will wear away in that usage. As a result, a prudent choice of tip for a particular job is usually a compromise between the initial cost of the tip and the rapidity with which it will have to be replaced.

Another problem arises from the fact that, generally speaking, the harder a meaterial is the more brittle it is. Thus a tip which is hard enough to endure extended abrasion in severe conditions is also likely to be quite brittle and susceptible to being easily broken. Therefore, the choice of ripper tips is also a compromise between the desired strength and wear resistance.

It has been the common practice to use cast steel tips for light work and forged or fabricated tips for more severe applications. However, recent increases in the power output of tractors and other earthmoving equipment enables greater forces to be applied to the digging which in turn allows harder materials to be penetrated or ripped. During extended digging or ripping of such hard materials, the tips become heated to elevated temperatures by frictional forces with a resultant softening of the tip surface. This softening of the tip surface accelerates wear of the tip material and thereby seriously reduces the tip life.

To resolve this problem transverse inserts of relatively hard material have heretofore been devised to form the forward edge of the tip and in other instances a thin coating of hard material has been deposited on portions of the tip surface. These techniques do not provide a fully satisfactory solution since the hard material is confined to portions of the tip which may be quickly eroded away and thereafter wear proceeds at the same rate as in a tooth formed only of relatively soft material. Moreover, the configuration and location of the hard material exposes much of this relatively brittle material to severe shock loads which can cause breakage.

BRIEF SUMMARY OF THE INVENTION

This invention provides a digging tooth tip in which a portion of the tip that encounters the greatest frictional and abrasive forces is formed in part by an insert composed of a material of greater hardness in the rest of the tip. The insert extends longitudinally and is of substantial depth and therefore remains effective to resist abrasion after considerable wearing away of the point of the tip has occurred. The insert is separately formed and then secured in a conforming cavity in the adjacent softer but stronger material by a suitable bonding process, such as electron beam welding or brazing whereby the surrounding material aids in protecting the hard inserts from breakage due to shock loads. The invention provides configurations and placements for the inserts and conforming cavities which act to reduce the possibility of breakage of the relatively hard and brittle insert material.

Accordingly, it is an object of this invention to provide a digging tooth tip which is both durable and economical.

Another object of this invention is to provide a digging tooth tip having portions formed of material harder than that in other portions wherein resistance of the hard material to breakage is enhanced.

The invention together with further objects and advantages thereof will best be understood by reference to the accompanying drawings and the following description of preferred embodiments.

BRIEF DESCRIPTION OF THE DRAWINGS

In the drawings:

FIG. 1 is a plan view of a first ripper tip embodying the present invention,

FIG. 2 is a side elevation view of the ripper tip shown in FIG. 1,

FIG. 3 is a plan view of a second ripper tip embodying the present invention,

FIG. 4 is a side elevation view of the ripper tip shown in FIG. 3,

FIG. 5 is a plan view of a third ripper tip embodying the invention, and

FIG. 6 is a longitudinal section view of the ripper tip of FIG. 5 taken along the line VI—VI thereof.

DESCRIPTION OF PREFERRED EMBODIMENTS

Referring initially to FIGS. 1 and 2 of the drawing a ripper tip 10 has a front portion 11 adapted for engaging the earth and a rear portion 12 adapted for being secured to a supporting shank of a ripper, bucket, scarifier or the like. The construction of the rearward portion 12, which has a wedge shaped internal socket 13 for receiving the shank and a bore 14 for pinning the tip to the shank is conventional and well known and will not be further described.

The forward portion 11 of tip 10 is of a generally wedge shaped configuration and includes a cavity 16 of slot like form in this example. Cavity 16 extends from the top surface to the bottom surface of the tip, midway between the sides thereof, and extends longitudinally from the forward or leading edge 17 of the tip back

toward the rear portion **12** and ends a small distance forward from the base of socket **13.**

A preformed insert **18** has a configuration conforming to that of cavity **16** and is fitted therein. Insert **18** is bonded to the adjacent tip material within cavity **16** by electron beam welding, brazing or other suitable bonding process. Insert **18** is composed of a material substantially harder than the adjacent material of the rest of the tip **10** and may typically be formed of tungsten carbide or H–11 tool steel for example. In operation, the softer portion of the leading edge of the tip **10** will tend to wear away until the hard insert **18** portion bears most of the abrasion of the tip whereupon the tip will wear relatively evenly at a rate dependent upon the hardness of the insert material. During this time the softer, side portions of the tip will be abraded at a slower rate than in other tips which are constructed solely of relatively soft metal. While the wear resistance of the tip **10** is high owing to the presence of the hard insert **18,** the tip is also desirably strong with respect to resisting breakage owing to the presence of substantial amounts of strong but relatively soft metal adjacent the insert.

Variations are possible not only in the overall configuration of the tip itself but in the number, location and configuration of the hard insert material. Referring now to FIGS. **3** and **4** in conjunction, a second ripper tip **10'** is shown which provides still greater protection of the relatively brittle hard material against breakage. The second tip **10'** has a forward portion **21** and a rear portion **22** and is adapted to be secured on a shank in a conventional manner as described in conjunction with the first embodiment of the invention.

The forward portion **21** of the tip **10'** has a pair of longitudinally extending cavities **23** which are parallel spaced apart grooves in the upper surface of the tip and which extend from the leading edge **24** of the tip back towards the rear portion **22** thereof.

The forward portion of the tip **10'** is wedge shaped in profile with the leading edge **24** being blunt and has a top surface **26** and bottom surface **27** which increasingly diverge rearwardly from the leading edge. Both cavities **23** have a bottom surface **28** which extends rearwardly from the lower portion of the leading edge **24** in substantially parallel relationship to the top surface **26** and which therefore diverges increasingly from the bottom surface **27** of the tip. The bottom surfaces **28** of cavities **23** curve upward at the back end in a gradual manner to intersect the top surface **26** of the tip thereby avoiding a sharp corner at the lower back end of the cavities.

One of a pair of inserts **29** is disposed in each cavity **23** and secured therein by electron beam welding, brazing or the like. Inserts **29** are composed of a material substantially harder than the other portions of the tip **10'** and are formed with a configuration conforming to that of the cavities **23.**

This second embodiment of the invention offers substantially increased protection of the insert material against breakage for several reasons. First, supporting material is present at the bottom of the inserts **29** as well as at the sides thereof. In addition it should be noted that the thickness of the supporting material below the inserts **29** increases in the rearward direction. Bending moments within forward regions of a digging tooth are greater in proportion to distance from the forward edge and thus the present configuration provides increasing support below the inserts **29** commensurate with the greater moment forces experienced rearwardly from the leading edge **24.** Still further, any tendency of the sides of the forward portion of the tip to spread is counteracted by the presence of relatively strong material extending across the lower portion of the leading edge **24.** Finally, the large radius smooth curve at the back end of the inserts **29** prevents severe concentrations of stress from shock loads that can otherwise occur within the relatively brittle inserts if sharp corners are present at that particular location.

Referring now to FIGS. **5** and **6** in conjunction, a third ripper tip **10''** is shown which combines certain advantages of both of the previously described embodiments. The configuration of tip **10''** provides a relatively large expanse of hard material in the most critical area at the top forward portion of the tip while also providing good protection of such material against breakage from the shock loads.

Tip **10''** has a rearward portion **31** which may have a configuration similar to that previously described in order to be fitted in the conventional manner upon a shank of earth digging apparatus. The forward portion **32** of tip **10''** is tapered both in plan and profile and has top and bottom surfaces **33** and **34** respectively which diverge rearwardly from a leading or forward edge **36.** To receive a hard insert **37,** a substantially rectangular cavity **38** is formed in the upper surface of the forward portion **32** of the tip. Cavity **38** begins a small distance rearward from the leading edge **36** and extends backward for a substantial distance with a bottom surface which is substantially parallel to the top surface **33** of the tip. Both the front and back ends of the cavity **38** are defined by rounded surfaces **39** and **41** respectively and the corner surfaces of the cavity are also rounded when viewed from the top of the tip. The insert **37,** which extends across the major portion of the forward portion of the tip is formed of a material substantially harder than the remaining portion of the tips and has a configuration conforming to that of the cavity **38.** The insert **37** is brazed or otherwise bonded into the cavity.

The particular tip **10''** depicted in FIGS. **5** and **6** is of the type described in copending U.S. Pat. application Ser. No. 203,659 of V.A. Stepe filed Nov. 29, 1971, for "Fail Safe Replaceable Tip for Digging Tooth" and assigned to the assignee of the present application. In particular, broad grooves **42** and **43** of arcuate profile are formed in the top and bottom surfaces **33** and **34** of the tip in order to predetermine the position at which breakage of the tip as a whole will occur if it occurs. Breakage at the region determined by grooves **42** and **43** leaves the more permanent parts of the tooth protected against damage whereas this may not be the case if the breakage occurs elsewhere. The present invention is compatible with such a construction in that a portion of the groove **42** which is required at the top surface **33** may be defined by eliminating the portion of the insert **37** material which would otherwise occupy part of the breakage fixing cavity **42.**

It may be observed that the embodiment of the invention depicted in FIGS. **5** and **6** provides support from relatively strong material along the front of the hard insert **37** and at the sides of the insert and beneath the insert. Further, the amount of supporting material increases in the rearward direction where greater bending moments are encountered and sharp corners be-

tween the insert and surrounding material, which might otherwise promote breakage of the insert material, are absent. As in the previous instances, the hard insert **37** extends for a substantial distance longitudinally within the tip **10''** and is thus effective to slow wear for a substantial period of usage.

While the invention has been disclosed with respect to certain preferred embodiments, many other variations are possible and it is not intended to limit the invention except as defined by the following claims.

What is claimed is:

1. A replaceable tip for an earth digging tooth comprising a rear tip portion having means for attachment to said tooth and having a forward tip portion which is integral with said rear tip portion and removable from said tooth therewith and which has top and bottom surfaces and side surfaces extending from said rear portion to a transverse forward edge of said tip, said tip having at least one longitudinally extending cavity within said forward portion which cavity extends downward into said forward portion of said tip from said top surface thereof and is confined to regions of said forward portion spaced from said side surfaces thereof, and an insert formed as a unit apart from said forward portion of said tip from a material which is harder than that of said tip and having a configuration conforming to that of said cavity, said insert being fitted into said cavity and being bonded to the adjacent surfaces of said cavity, wherein said cavity and said insert extend downward from said top surface a distance less than the total height of said forward portion of said tip and said cavity and said insert have a forward end spaced backward from said transverse forward edge of said tip and wherein both the front and back portions of said insert and said cavity have rounded profiles and wherein said cavity and said insert have rounded corners at said top surface, wherein said forward tip portion has grooves of arcuate profile in said top and bottom surfaces thereof for establishing a predetermined failure zone and wherein said groove in said top surface overlaps said cavity and is formed in part in the rear portion of the top region of said insert.

* * * * *