US00RE38113E

(19) **United States**
(12) **Reissued Patent**
Nishi et al.

(10) **Patent Number: US RE38,113 E**
(45) **Date of Reissued Patent: May 6, 2003**

(54) **METHOD OF DRIVING MASK STAGE AND METHOD OF MASK ALIGNMENT**

(75) Inventors: **Kenji Nishi**, Yokohama (JP); **Seiro Murakami**, Chiba (JP)

(73) Assignee: **Nikon Corporation**, Tokyo (JP)

(21) Appl. No.: **09/276,465**

(22) Filed: **Mar. 25, 1999**

Related U.S. Patent Documents

Reissue of:
(64) Patent No.: **5,464,715**
Issued: **Nov. 7, 1995**
Appl. No.: **08/217,841**
Filed: **Mar. 25, 1994**

U.S. Applications:

(63) Continuation of application No. 08/966,353, filed on Nov. 7, 1997, now abandoned.

(30) **Foreign Application Priority Data**

Apr. 2, 1993 (JP) 5-076045
Apr. 13, 1993 (JP) 5-086066

(51) **Int. Cl.**[7] **G03F 9/00**; G01B 11/00
(52) **U.S. Cl.** **430/22**; 430/5; 356/399; 356/400; 356/401; 355/53
(58) **Field of Search** 430/5, 22, 30; 250/492.2; 356/399, 400, 401; 355/53

(56) **References Cited**

U.S. PATENT DOCUMENTS

4,659,225 A	*	4/1987	Takahashi	356/358
4,710,029 A		12/1987	Katoh	356/401
4,716,299 A		12/1987	Tanaka et al.	250/571
5,151,749 A		9/1992	Tanimoto et al.	356/375
5,194,893 A		3/1993	Nishi	355/53
5,363,196 A		11/1994	Cameron	356/358
5,424,552 A	*	6/1995	Tsuji et al.	250/548
5,473,435 A		12/1995	Masuyuki et al.	356/372
5,498,118 A		3/1996	Nakahara	414/416
5,506,684 A	*	4/1996	Ota et al.	356/401
5,796,469 A		8/1998	Ebinuma	355/53

FOREIGN PATENT DOCUMENTS

JP	59-98446	7/1984
JP	62-150106	7/1987
JP	62-150721	7/1987
JP	63-128713	6/1988
JP	5-278813	10/1993

OTHER PUBLICATIONS

James Koch, "Laser Interferometers opto–electronic yardsticks", Machine Design, pp. 93–97, Feb. 20.*
U.S. patent application Ser. No. 06/943,808, Kakizaki et al., filed Dec. 19, 1986.

* cited by examiner

Primary Examiner—S. Rosasco
(74) *Attorney, Agent, or Firm*—Miles & Stockbridge P.C.

(57) **ABSTRACT**

In a scanning-type projection exposure system, curvature of a movable mirror that is used to measure mask stage coordinate positions is determined while the mask stage is moved in the scanning direction, by measuring coordinate positions, perpendicular to the scan direction, of the mask stage and of a mask mark elongated in the scan direction. The results of the measurements are used for correcting or compensating positional deviation during scanning. Rotational deviation of a mask pattern area is determined and is corrected or compensated. Also, a mask is aligned with respect to a coordinate system of the mask stage as preprocessing for exposure, using a mask alignment mark having two crossing linear patterns and determining a coordinate position of the crossing point by moving the mask relative to an observation area.

105 Claims, 15 Drawing Sheets

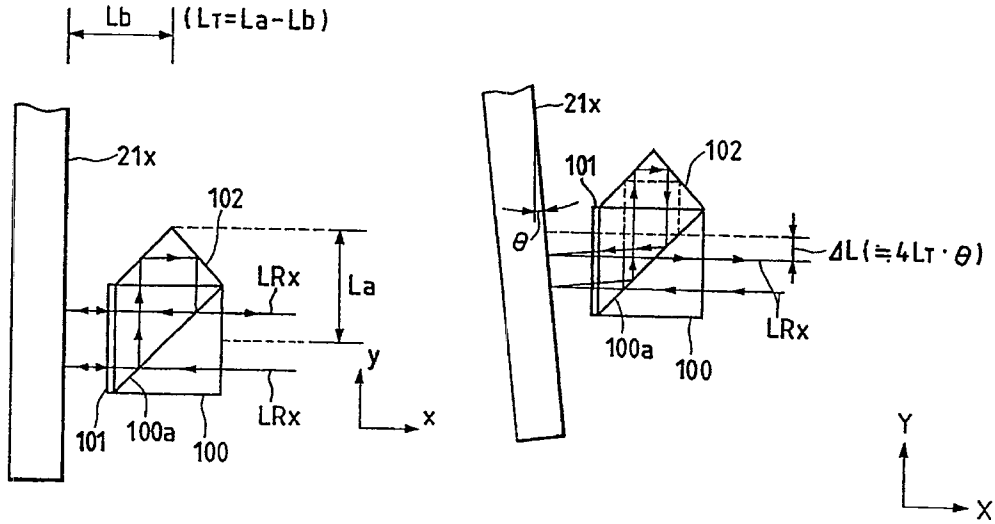

FIG. 1

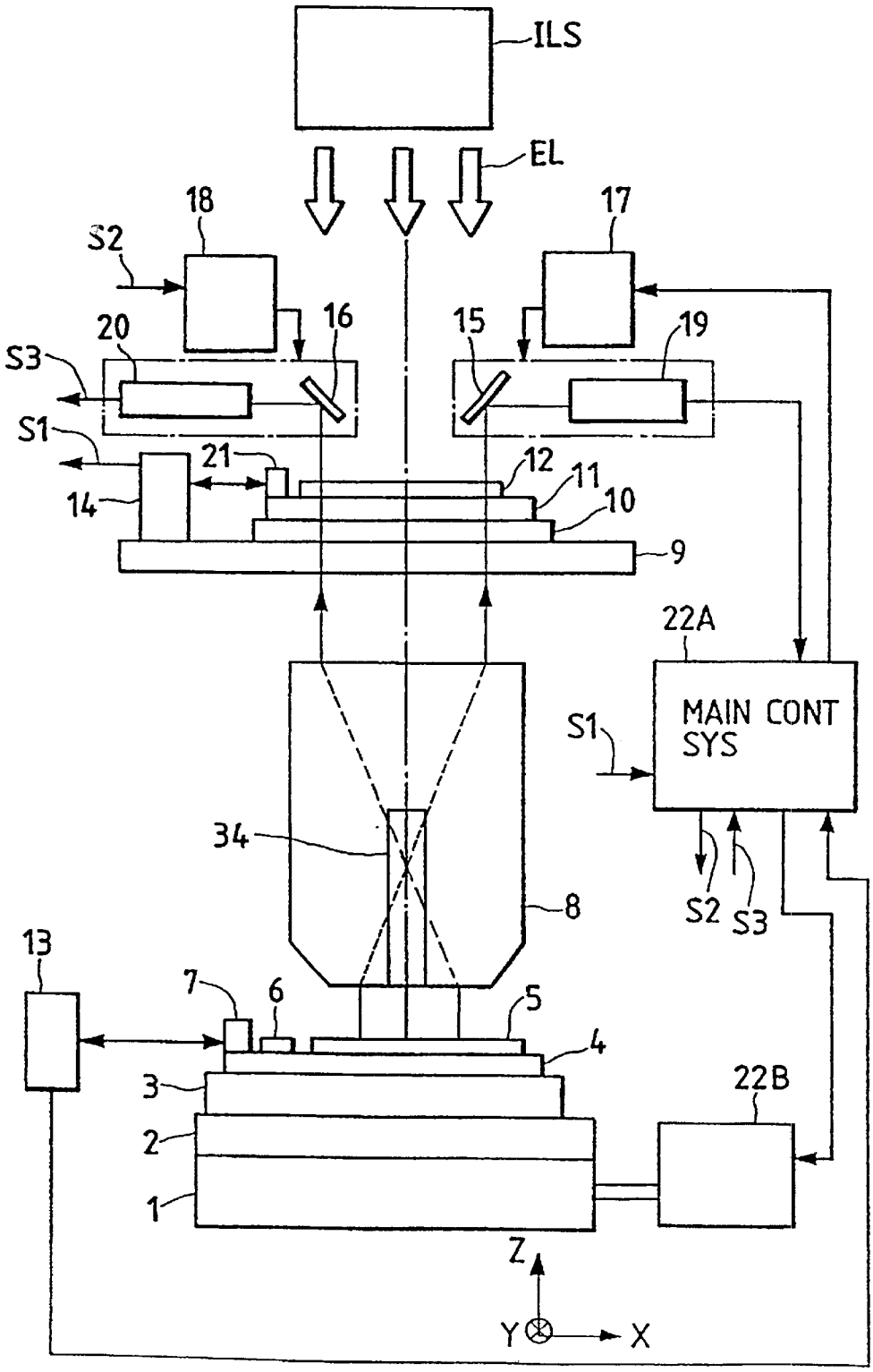
ILS
EL
18
17
S2
16
15
20
19
S3
S1
21
12
11
14
10
9
22A
MAIN CONT SYS
S1
34
8
S2
S3
13
7
6
5
4
3
22B
2
1
Z
Y
X

FIG. 2A

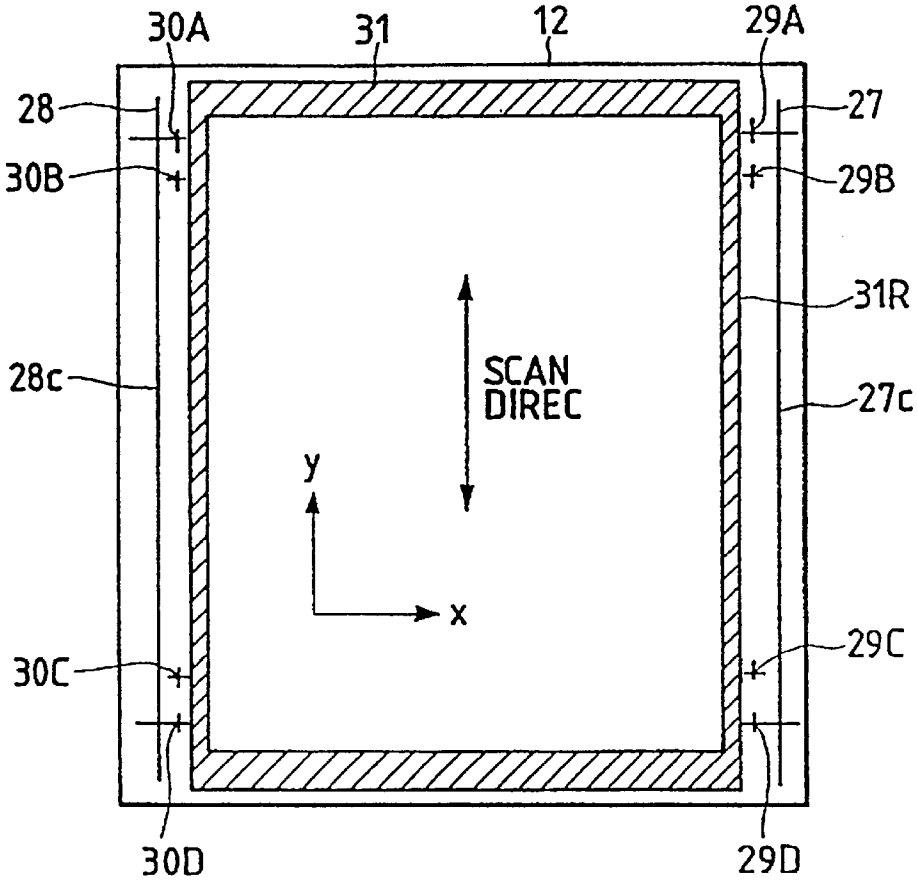

FIG. 2B

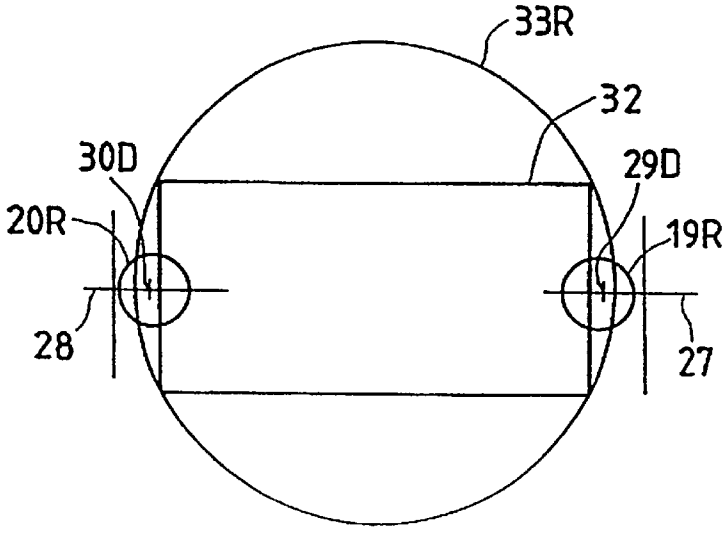

FIG. 2C

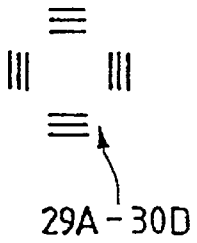

FIG. 3A

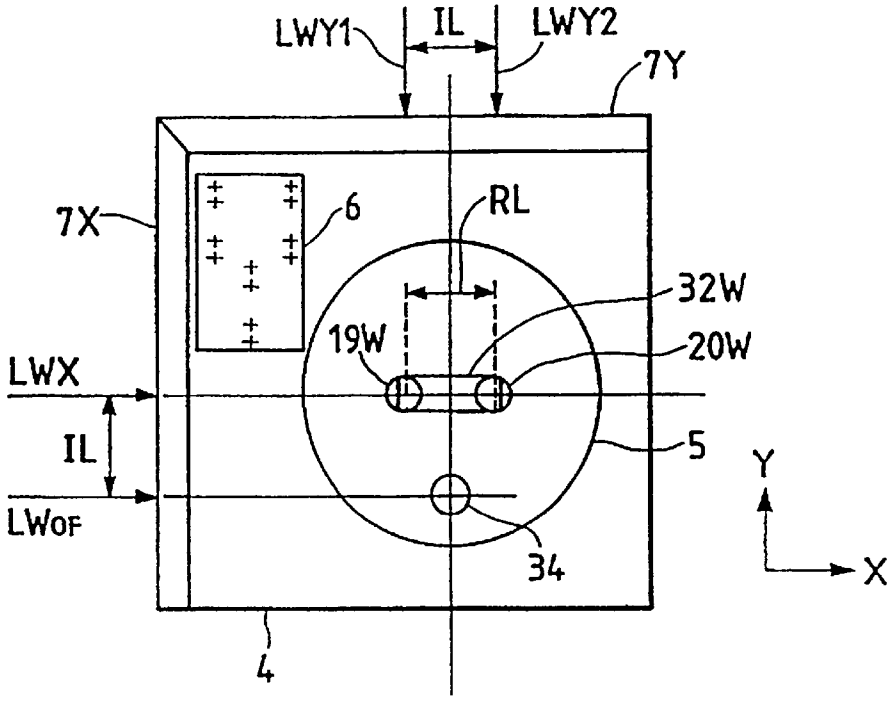
LWY1
IL
LWY2
7Y
7X
6
RL
32W
19W
20W
LWX
IL
5
Y
LWOF
34
X
4

FIG. 3B

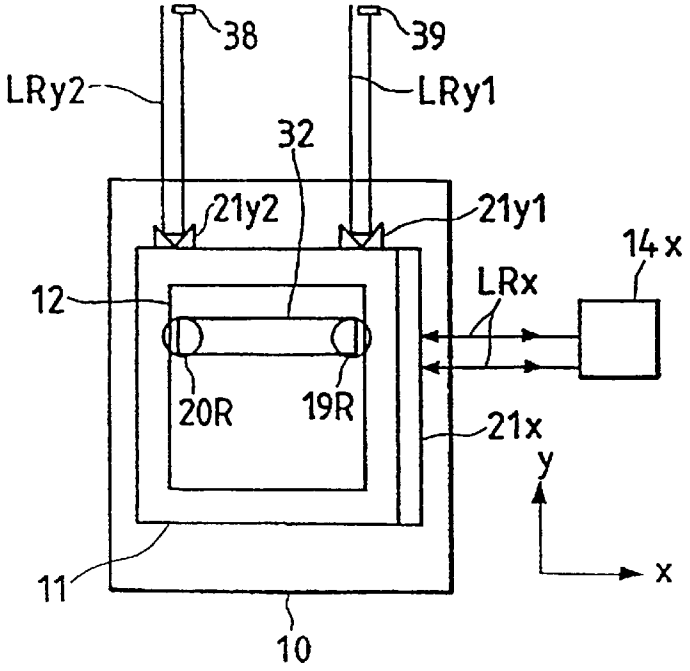
38
39
LRy2
LRy1
32
21y2
21y1
14x
12
LRx
20R
19R
21x
y
11
x
10

FIG. 4A

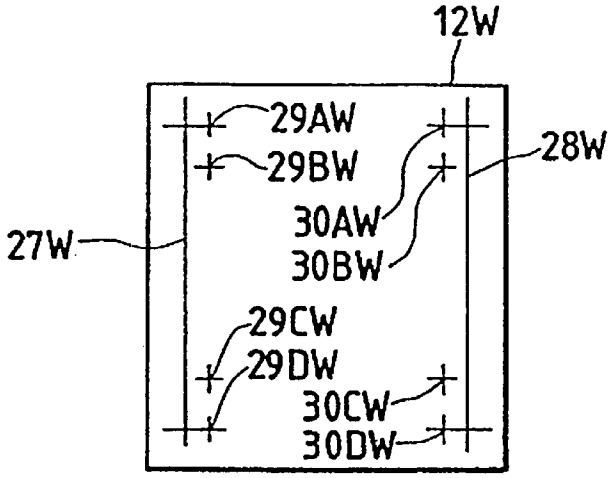

FIG. 4B

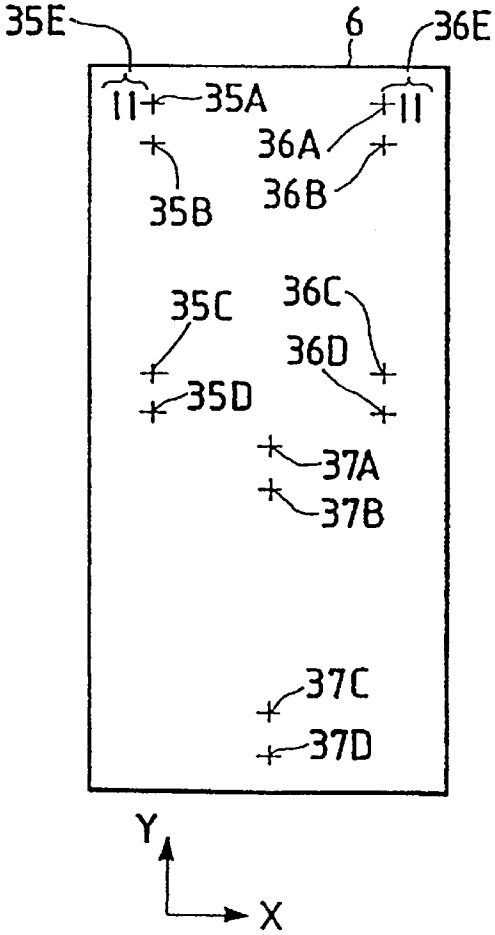

FIG. 4C

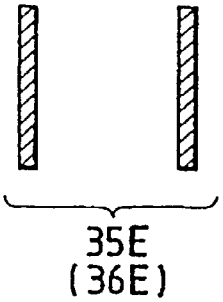

FIG. 5

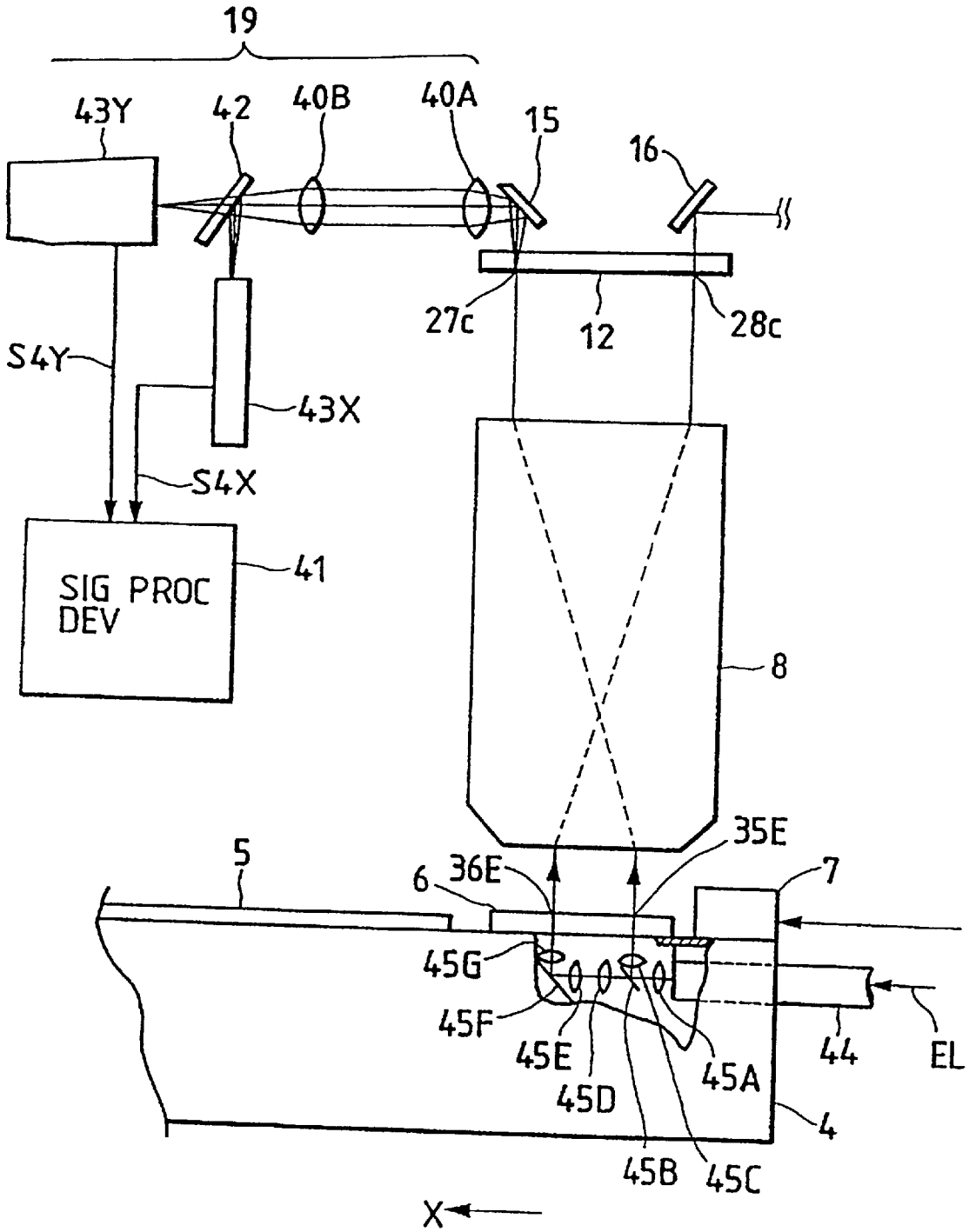
19
43Y
42
40B
40A
15
16
27c
12
28c
S4Y
43X
S4X
SIG PROC
DEV
41
8
35E
5
6
36E
7
45G
45F
45E
45D
45A
44
EL
4
45B
45C
X

FIG. 6A

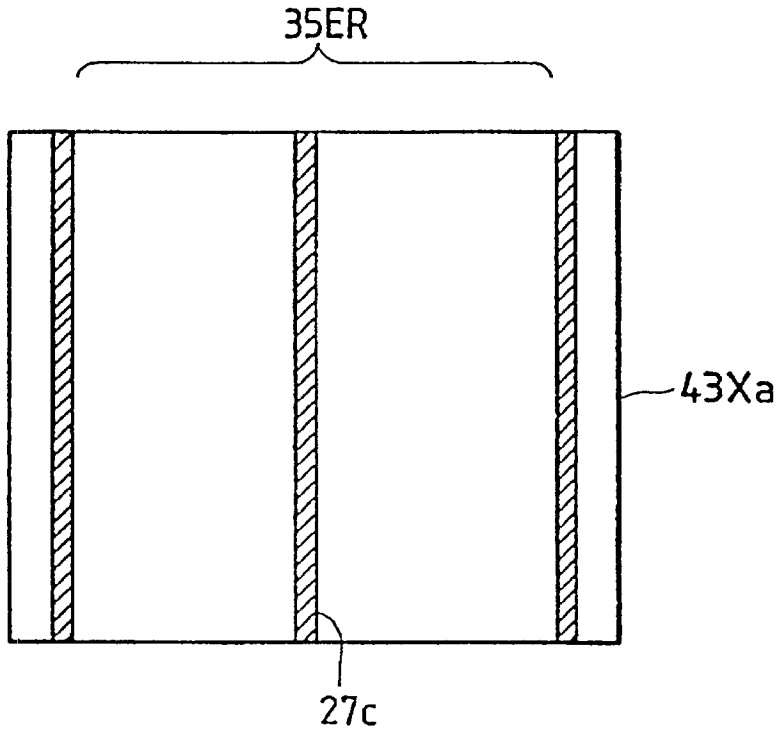

FIG. 6B

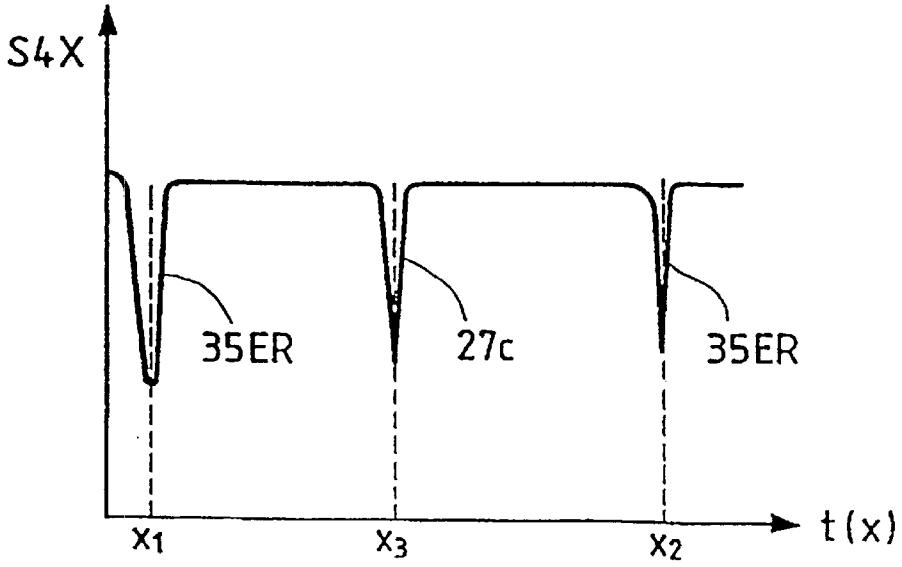

FIG. 7A

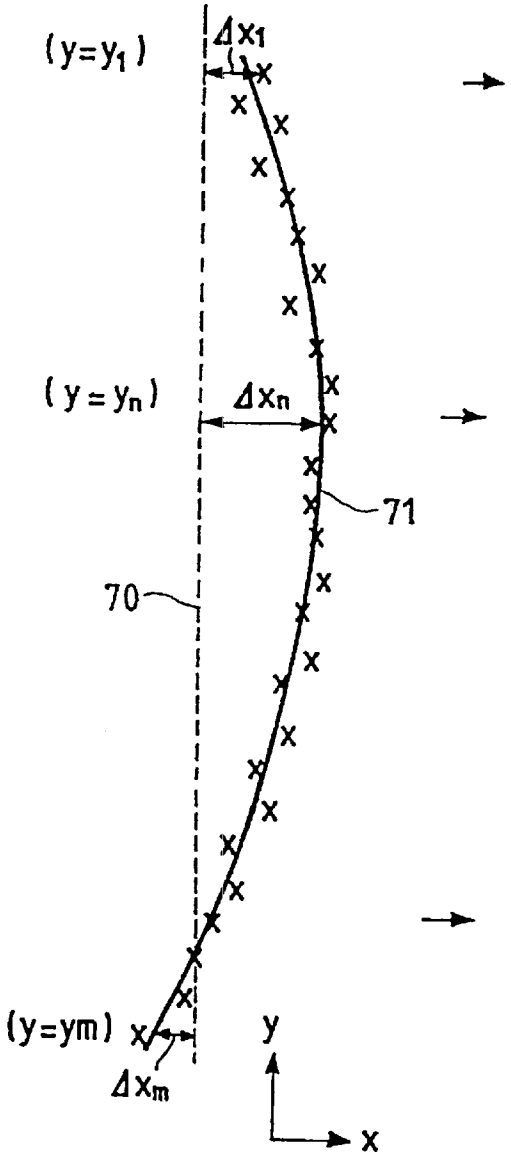

FIG. 7B

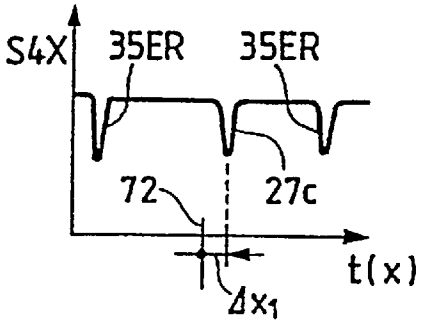

FIG. 7C

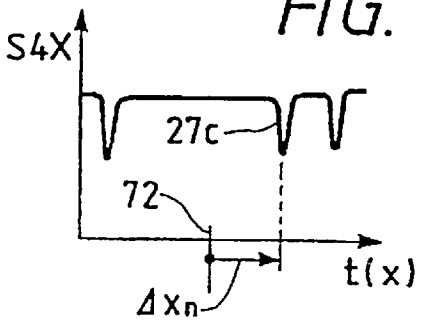

FIG. 7D

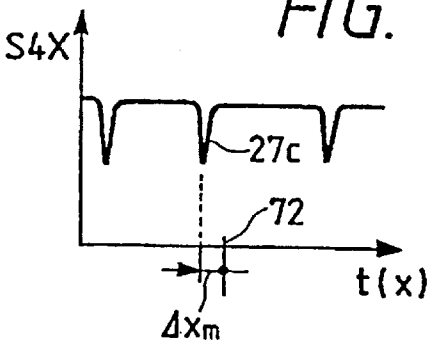

FIG. 8A

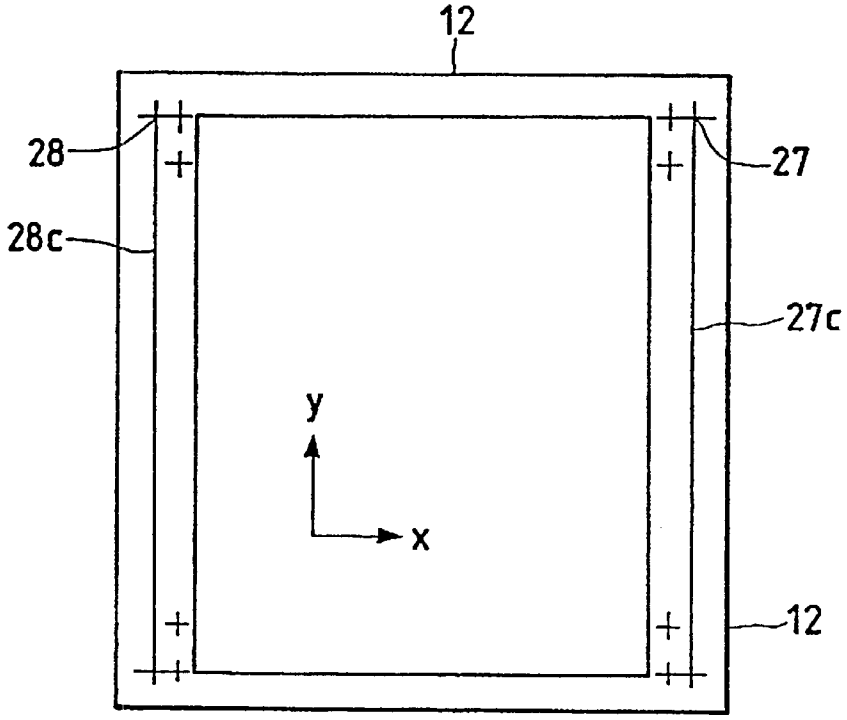

FIG. 8B

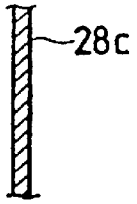

FIG. 8C

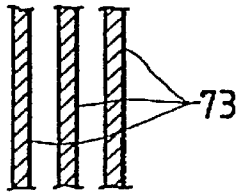

FIG. 8D

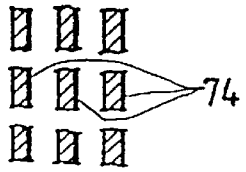

FIG. 9

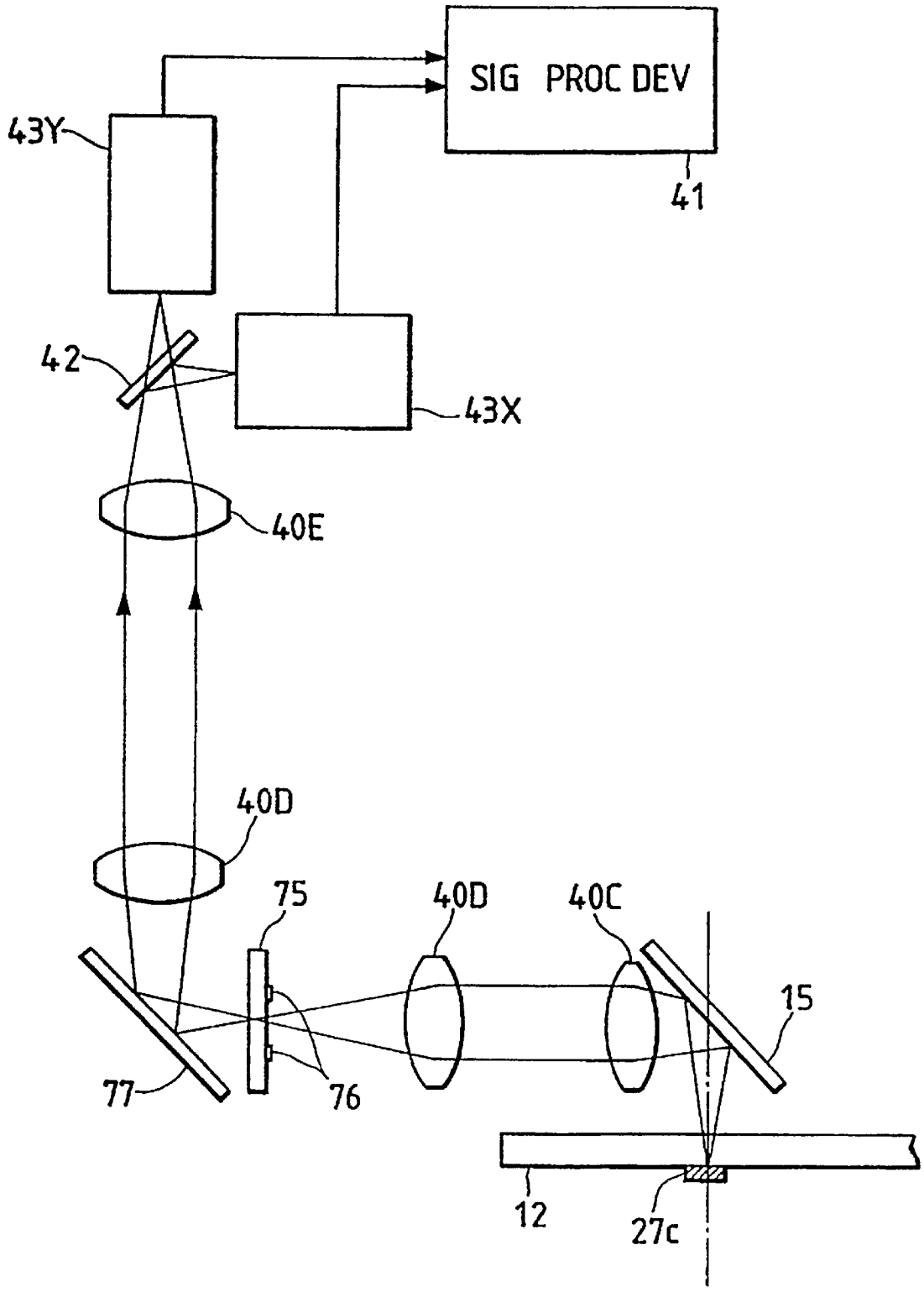

FIG. 10A

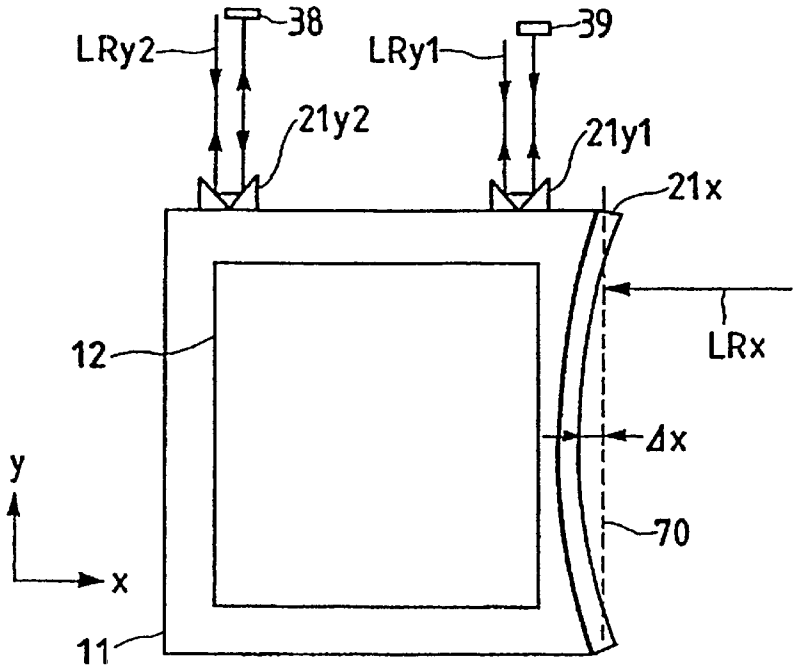

FIG. 10B

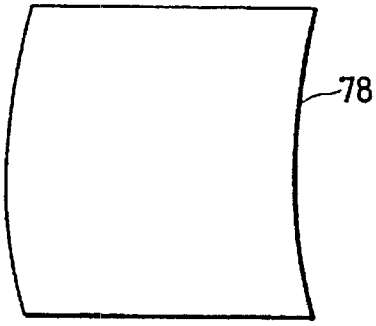

FIG. 10C

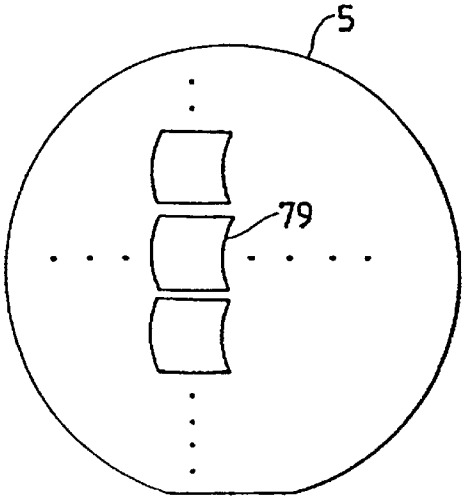

FIG. 11

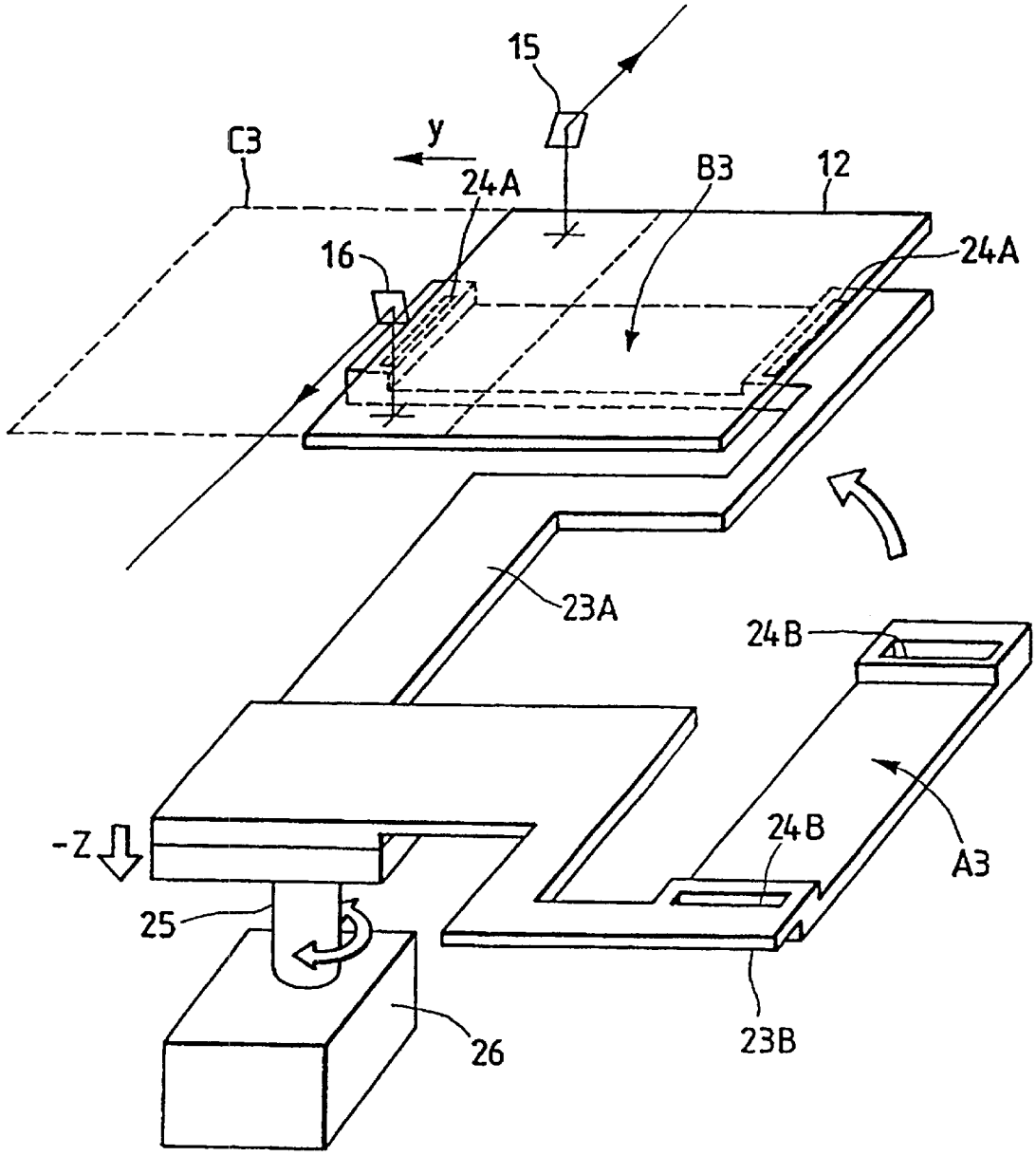

FIG. 12A

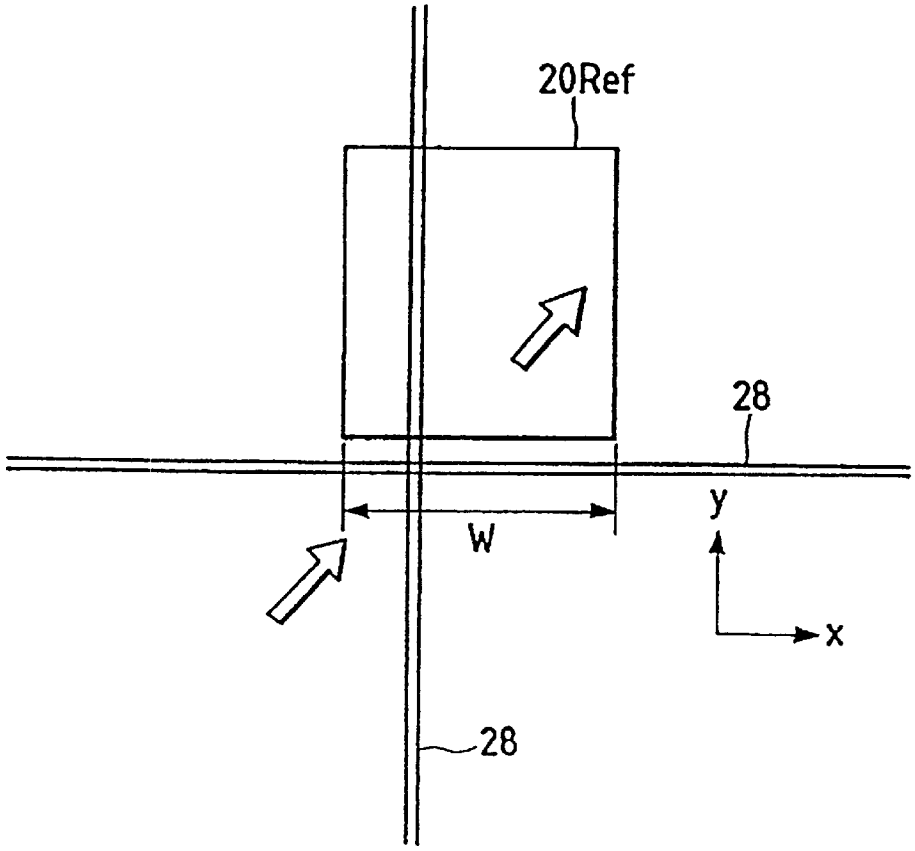

FIG. 12B

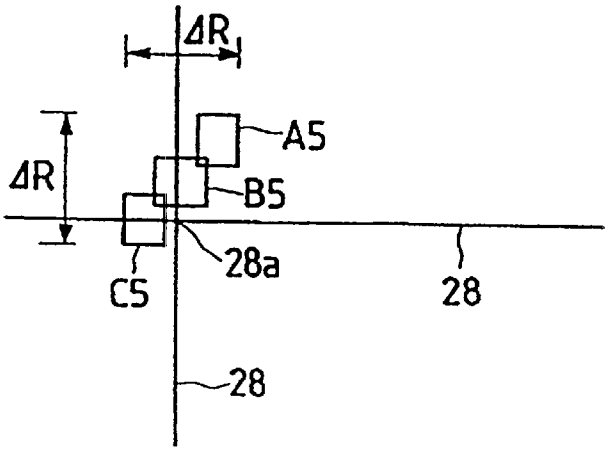

FIG. 12C

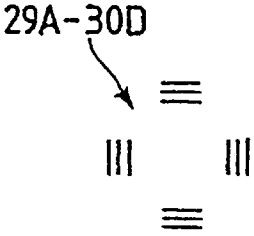

FIG. 13A

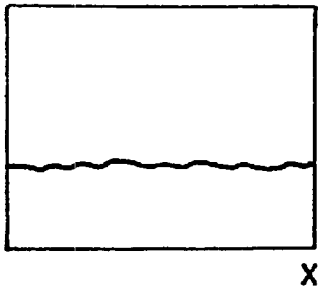

FIG. 13D

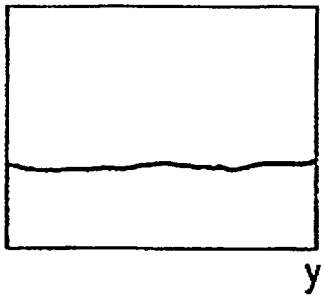

FIG. 13B

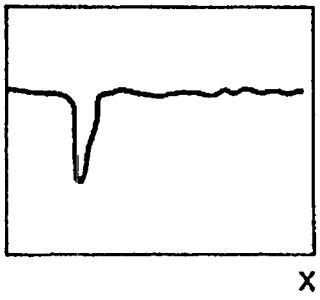

FIG. 13E

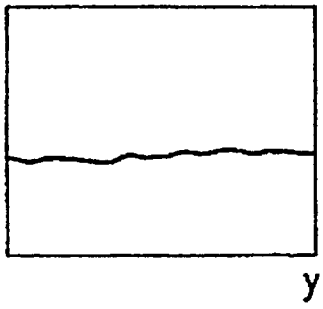

FIG. 13C

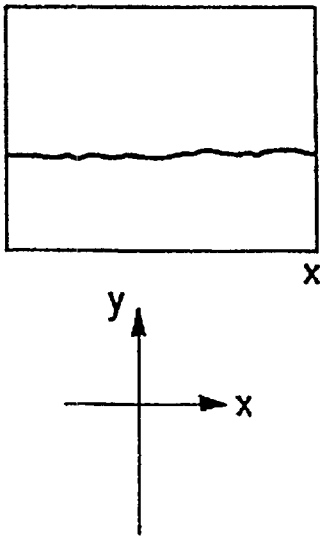

FIG. 13F

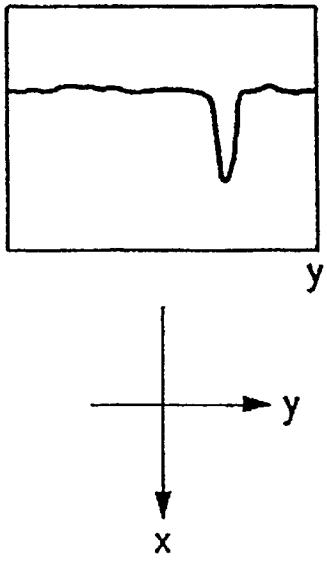

FIG. 14A

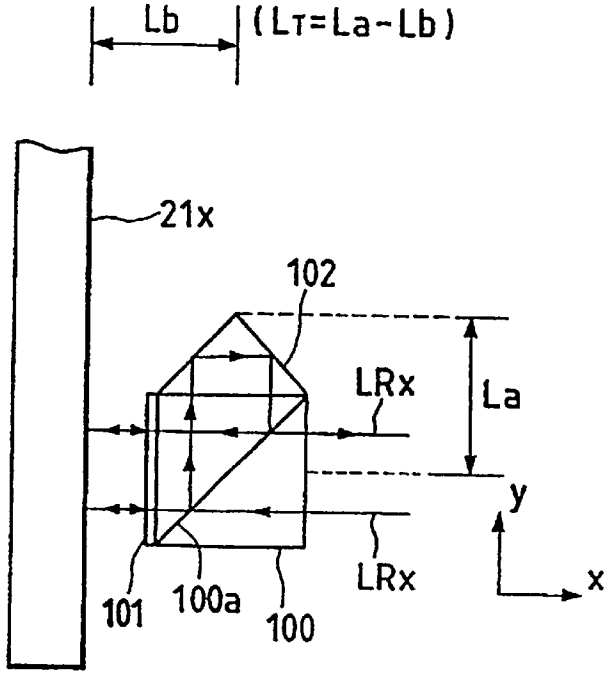

FIG. 14B

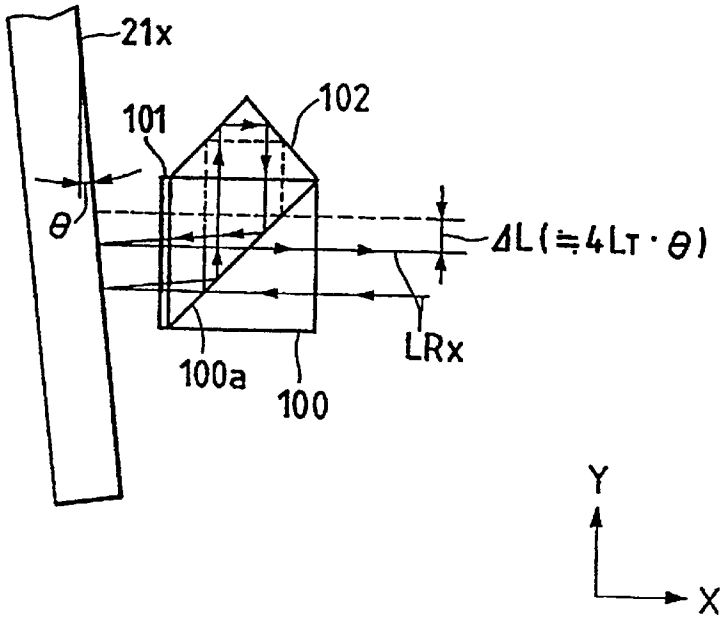

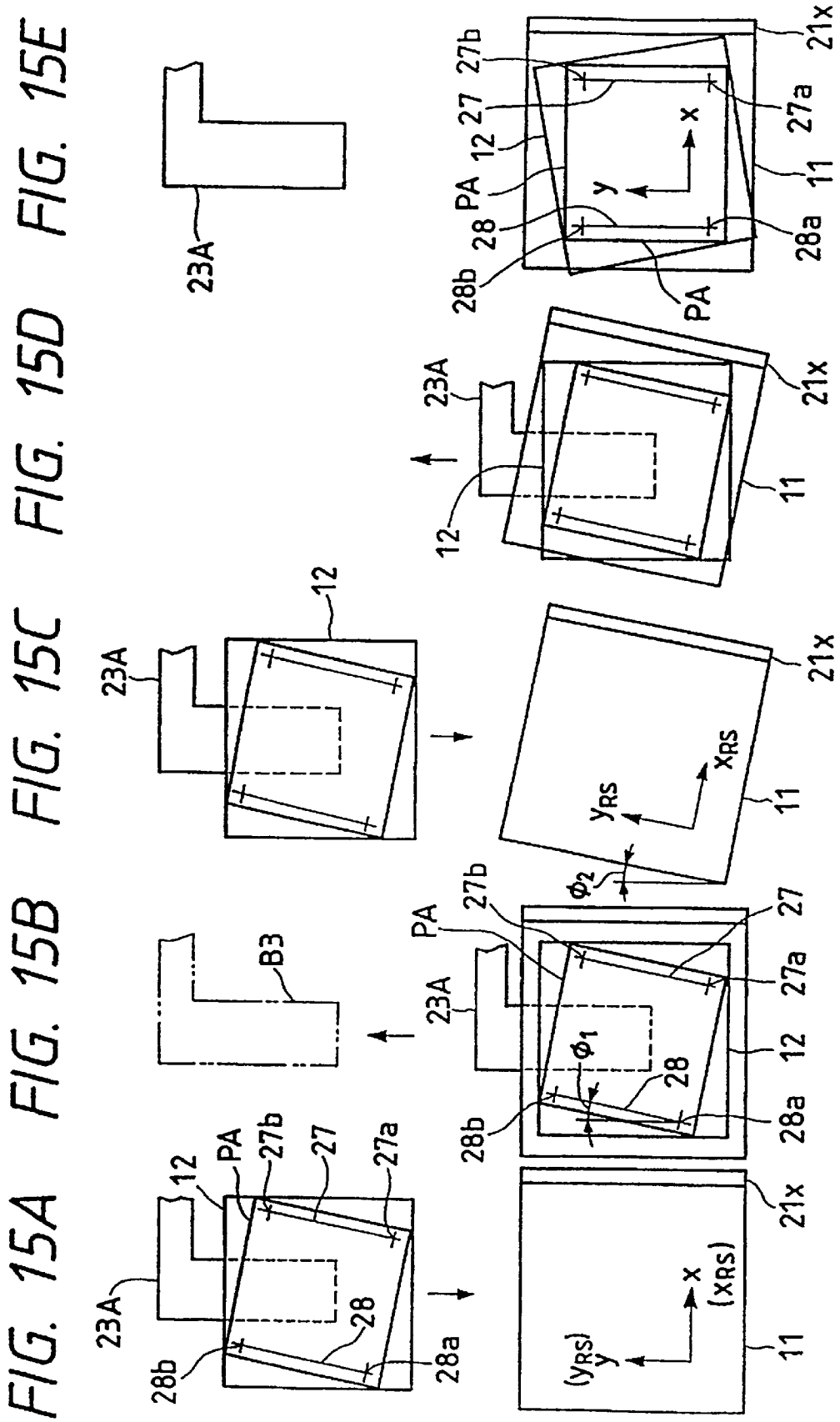
FIG. 15A
FIG. 15B
FIG. 15C
FIG. 15D
FIG. 15E
23A
12
PA
27b
27
27a
28
28b
28a
B3
21x
11
x
y
(xRS)
(yRS)
xRS
yRS
φ1
φ2

METHOD OF DRIVING MASK STAGE AND METHOD OF MASK ALIGNMENT

Matter enclosed in heavy brackets [ ] appears in the original patent but forms no part of this reissue specification; matter printed in italics indicates the additions made by reissue.

This is a continuation of Ser. No. 08/966,353 filed Nov. 7, 1997, now abandoned, which is a Reissue No. of 08/217,841 filed Mar. 25, 1994, U.S. Pat. No. 4,464,715.

BACKGROUND OF THE INVENTION

1. Field of the Invention

The present invention relates to a method of driving a mask stage and a method of mask alignment. More particularly, the present invention relates to a method of driving a stage, which is suitably applied to a case where a reticle-side stage is driven in a scan direction in a slit-scan exposure type projection exposure apparatus, and a method of mask alignment in the projection exposure apparatus.

2. Related Background Art

When a semiconductor element, a liquid crystal display element, a thin film magnetic head, or the like is manufactured in a photolithography process, a projection exposure apparatus for transferring a pattern on a photomask or a reticle (to be generally referred to as a "reticle" hereinafter) onto a substrate (a wafer, glass plate, or the like) coated with a photosensitive material is used.

As a conventional projection exposure apparatus, a step-and-repeat type reduction projection exposure apparatus (stepper) for sequentially exposing a pattern image on a reticle onto each of shot areas by sequentially moving the shot areas of a wafer into an exposure field of a projection optical system is popularly used.

In recent years, since patterns on semiconductor devices or the like tend to be miniaturized, it is required to increase the resolution of a projection optical system. For this reason, in order to increase the resolution, a technique for decreasing the wavelength of exposure light, a technique for increasing the numerical aperture of the projection optical system, and the like have been examined. However, with either technique, it becomes difficult to maintain high accuracy of imaging performance (a distortion, curvature of field, and the like) on the entire exposure field when an exposure field as large as that in the prior art is to be assured. For this reason, an apparatus which is currently reconsidered its use is a so-called slit-scan exposure type projection exposure apparatus.

In the slit-scan exposure type projection exposure apparatus, a pattern on a reticle is exposed onto a wafer, wherein the reticle and wafer are being synchronously scanned relative to a rectangular or arcuated illumination area (to be referred to as a "slit-like illumination area" hereinafter).

Therefore, when a pattern with the same area as that in the stepper system is to be exposed onto a wafer, the exposure field of the projection optical system in the slit-scan exposure system can be set to be smaller than that in the stepper system. As a result, accuracy of imaging performance in the exposure field may be improved.

The mainstream of the conventional reticle size is 6", and the mainstream of the projection magnification of the projection optical system is x⅕. However, as the area of the circuit pattern of, e.g., a semiconductor element increases, the 6 " reticle cannot serve its purpose at the x⅕ magnification. For this reason, a projection exposure apparatus in which the projection magnification of the projection optical system is changed to, e.g., x¼ must be designed. In order to cope with such an increase in area of a pattern to be transferred, the slit-scan exposure system is advantageous.

In a projection exposure apparatus of this type (stepper), a reticle must be aligned in advance on a reticle stage. For this purpose, a reticle alignment device is arranged on a reticle mark on the reticle. Such a reticle alignment device is disclosed in U.S. Pat. No. 4,710,029. In an alignment system disclosed in U.S. Pat. No. 4,710,029, light reflected by an alignment mark on a reticle is incident on a sensor via a vibration mirror and a slit. When the output from the sensor is synchronously detected by a driving signal of the vibration mirror, the position of the alignment mark relative to a slit is detected. The position of the alignment mark is detected based on a signal from the sensor in the alignment system, and the reticle is moved by a servo system, so that the alignment mark accurately coincides with the slit. As a result, alignment of the reticle with respect to the apparatus main body is executed.

SUMMARY OF THE INVENTION

In such a slit-scan exposure system, when the moving path of the reticle stage for driving a reticle is curved with respect to a desired path (for example, the moving path has a predetermined curvature with respect to a desired linear path), each shot area on a wafer undesirably has an intra-shot distortion according to the curve (curvature) of the moving path of the reticle stage. Furthermore, when the characteristics of an intra-shot distortion vary from one exposure apparatus to another, such a variation results in a matching error between different layers on the wafer. When the reticle stage is controlled by a method of measuring the position of the reticle stage by interfering light components reflected by a stationary mirror and a movable mirror provided to the reticle stage using an optical interferometer, such a curve of the path of the reticle stage is caused by a curve of the movable mirror.

The present invention has been made in consideration of the above situation, and has as its object to provide a method of driving a stage, which can prevent generation of an intra-shot distortion even when a movable mirror provided to a stage at the side of reticle (mask) has a curve in a slit-scan exposure type exposure apparatus.

In order to achieve the above object, according to the first invention, there is provided a method of driving a mask stage using the mask stage which mounts a mask formed with a predetermined pattern and is movable in a predetermined scan direction, a movable mirror which is arranged on the mask stage and has a reflection surface substantially parallel to the scan direction, measurement means for measuring a coordinate position, in a direction perpendicular to the scan direction, of the mask stage by radiating a measurement beam into the movable mirror, a substrate stage which mounts a photosensitive substrate and is movable in a direction substantially parallel to the scan direction, an illumination system for illuminating a predetermined area on the mask with illumination light, a projection optical system for projecting the pattern on the mask onto the photosensitive substrate, and an exposure device for sequentially exposing the pattern on the mask onto the photosensitive substrate while synchronously scanning the mask stage and the substrate stage in the scan direction with respect to an optical axis of the projection optical system, comprising:

the first step of placing the mask on the mask stage;

the second step of calculating a curved amount of the movable mirror by measuring the coordinate position, in the direction perpendicular to the scan direction, of the mask stage by the measurement means while scanning the mask stage in the scan direction; and

the third step of moving the mask stage in the direction perpendicular to the scan direction to correct the curved amount of the movable mirror calculated in the second step when the mask stage is scanned in the scan direction with respect to the optical axis.

According to the second invention, there is provided a method of driving a mask stage using a mask guide which is formed with a guide portion extending in predetermined scan direction, the mask stage which is mounted on the mask. Guide to be movable in the scan direction, and mounts a mask formed with a predetermined pattern, a movable mirror which is attached to the mask stage, and has a reflection surface substantially parallel to the scan direction, measurement means for measuring a coordinate position, in a direction perpendicular to the scan direction, of the mask stage by radiating a measurement beam into the movable mirror, a substrate stage which is movable in the direction substantially parallel to the scan direction and mounts a photosensitive substrate, an illumination system for illuminating a predetermined area on the mask with illumination light, a projection optical system for projecting the pattern on the mask onto the photosensitive substrate, and an exposure device for sequentially exposing the pattern on the mask onto the photosensitive substrate while synchronously scanning the mask stage and the substrate stage in the scan direction with respect to an optical axis of the projection optical system, comprising the steps of:

calculating a curved amount of the movable mirror by measuring the coordinate position, in the direction perpendicular to the scan direction, of the mask stage by the measurement means by scanning the mask stage in the scan direction with reference to the mask guide; and

moving the mask stage in the direction perpendicular to the scan direction so as to correct the curved amount of the movable mirror when a transfer mask is scanned via the mask stage in the scan direction with respect to the predetermined shaped illumination area.

According to the first invention, since the curved amount of the movable mirror is measured with reference to the measurement mark provided to the mask, and the measured curved amount is corrected in exposure, even when the movable mirror provided to the mask stage on the side of the mask has a curve, generation of an intra-shot distortion at the substrate side can be prevented.

According to the second invention, since the curved amount of the movable mirror is measured with reference to the mask guide, when the straightness of the mask guide is good, the curve amount of the movable mirror can be quickly and easily measured, and the measured curved amount can be corrected in exposure.

In the slit-scan exposure type projection exposure apparatus as well, when a reticle is exchanged with another one, the new reticle must be aligned. However, in the slit-scan exposure system for driving a reticle in a predetermined direction with high accuracy during exposure, a reticle interferometer for monitoring the position of the reticle with high accuracy must be mounted. For this reason, it is difficult to assure larger driving strokes of the reticle in the X and Y directions and the rotational direction than those in a conventional stepper type projection exposure apparatus upon alignment of a reticle. Therefore, it is difficult to directly apply an alignment method used in the conventional stepper to the slit-scan exposure type projection exposure apparatus.

In general, the electron beam drawing error of a reticle mark with respect to the outer shape of a reticle is about ±0.5 mm to ±1 mm. In this case, when the reticle is aligned on the reticle stage with reference to its outer shape, if a pattern drawing area is inclined at a maximum inclination angle with respect to the outer shape of the reticle, the lateral shift amount of a laser beam from a reticle interferometer exceeds an allowable value of the lateral shift amount in a receiver of the interferometer. Therefore, it is difficult to completely correct the drawing error of a reticle in the conventional alignment method without causing a measurement error of the reticle interferometer.

Furthermore, an apparatus which mounts such a reticle interferometer can align a reticle at an arbitrary position with high accuracy by open-loop control. For this reason, an alignment method which can detect the position of a reticle mark at high speed by open-loop control must be developed in place of conventional closed-loop control (servo control) based on synchronous detection.

The present invention has been made in consideration of the above situation, and has as its object to provide an alignment method which can align a reticle (mark) at high speed with high accuracy in a slit-scan exposure type projection exposure apparatus.

In order to achieve the above object, according to the third invention, there is provided a method of aligning a mask with respect to a coordinate system on the side of a mask stage as pre-processing for exposing a pattern on the mask onto a photosensitive substrate using the mask stage which mounts the mask formed with a predetermined pattern and is movable in a predetermined scan direction, a substrate stage which mounts the photosensitive substrate and is movable in a direction substantially parallel to the scan direction, an illumination system for illuminating a predetermined illumination area on the mask with illumination light, a projection optical system for projecting the pattern on the mask onto the photosensitive substrate, observation means for observing a mark on the mask, and an exposure device for sequentially exposing the pattern on the mask onto the photosensitive substrate while synchronously scanning the mask stage and the substrate stage in the scan direction with respect to an optical axis of the projection optical system, comprising:

the first step of placing, as the mask, a mask formed with a first alignment mark having two linear patterns which cross each other, on the mask stage;

the second step of moving the two linear patterns in a direction to cross each other on the first alignment mark on the mask relative to an observation area of the observation means;

the third step of calculating a coordinate position, in the coordinate system on the side of the mask stage, of a crossing point of the two linear patterns of the first alignment mark by processing image data obtained by the observation means; and

the fourth step of aligning the mask to the coordinate system on the side of the mask stage on the basis of the coordinate position of the crossing point of the two linear patterns of the first alignment mark.

According to the fourth invention, there is provided a method of aligning a mask with respect to a coordinate system on the side of a mask stage as pre-processing for exposing a pattern on the mask onto a photosensitive substrate using the mask stage which mounts the mask formed

with a predetermined pattern and is movable in a predetermined scan direction, a substrate stage which mounts the photosensitive substrate and is movable in a direction substantially parallel to the scan direction, an illumination system for illuminating a predetermined illumination area on the mask with illumination light, a projection optical system for projecting the pattern on the mask onto the photosensitive substrate, and an exposure device for sequentially exposing the pattern on the mask onto the photosensitive substrate while synchronizing scanning the mask stage and the substrate stage in the scan direction with respect to an optical axis of the projection optical system, comprising:

the first step of placing, as the mask, a mask formed with an alignment mark, on the mask stage; and

the second step of calculating a rotational angle of the mask with respect to the coordinate system on the side of the mask stage by calculating a coordinate position of the alignment mark, and when the rotational angle calculated in the second step exceeds a predetermined allowable value, the method further comprising:

the third step of unloading the mask from the mask stage;

the fourth of rotating the mask stage by a predetermined rotational angle in a direction of the rotational angle calculated in the second step; and

the fifth stage of placing the mask on the mask stage again, and rotating the mask stage in a direction opposite to the rotational direction in the fourth step.

According to the fifth invention, there is provided a method of aligning a mask with respect to a coordinate system on the side of a mask stage as pre-processing for exposing a pattern on the mask onto a photosensitive substrate using the mask stage which mounts the mask formed with a predetermined pattern and is movable in a predetermined scan direction, a substrate stage which mounts the photosensitive substrate and is movable in a direction substantially parallel to the scan direction, an illumination system for illuminating a predetermined illumination area on the mask with illumination light, a projection optical system for projecting the pattern on the mask onto the photosensitive substrate, and an exposure device for sequentially exposing the pattern on the mask onto the photosensitive substrate while synchronously scanning the mask stage and the substrate stage in the scan direction with respect to an optical axis of the projection optical system, comprising:

the first step of placing, as the mask, a mask formed with an alignment mark, on the mask stage; and

the second step of calculating a rotational angle of the mask with respect to the coordinate system on the side of the mask stage by calculating a coordinate position of the alignment mark, and when the rotational angle calculated in the second step exceeds a predetermined allowable value, the method further comprising:

the third step of rotating the mask stage in a direction opposite to the rotational angle calculated in the second step;

the fourth step of unloading the mask from the mask stage; and

the fifth stage of rotating the mask stage in a direction opposite to the rotational direction in the third step, and placing the mask on the mask stage again.

According to the third invention, when the mask stage is driven with respect to the observation area of the observation means so as to obliquely scan the mask, the coordinate position of the crossing point of the two linear patterns of the alignment mark on the mask can be measured by the open-loop control. Therefore, mask alignment can be realized at high speed with high accuracy.

According to the fourth and fifth inventions, when a mask is re-placed on the mask stage upon occurrence of a rotation error of the mask which poses a problem when a slit-scan exposure type mask stage is used, mask alignment can be realized at high speed with high accuracy. Also, strokes of the reticle stage upon alignment need not be increased, and length measuring means need not have any correction mechanism.

BRIEF DESCRIPTION OF THE DRAWINGS

FIG. **1** is a schematic view showing a projection exposure apparatus according to an embodiment of the present invention;

FIG. **2**A is a plan view showing the arrangement of a curve measurement mark and an alignment mark on a reticle;

FIG. **2**B is a plan view showing the arrangement of the alignment mark and the like on an area conjugate with the effective field of a projection optical system;

FIG. **2**C is an enlarged view showing fine alignment marks **29**A to **30**D;

FIG. **3**A is a plan view of a stage on the side of a wafer;

FIG. **3**B is a plan view of a stage on the side of a reticle;

FIG. **4**A is a projection view showing the mark arrangement on a reticle;

FIG. **4**B is a plan view showing the arrangement of reference marks on a reference mark plate **6**;

FIG. **4**C is an enlarged view showing an example of a reference mark **35**E (or **36**E);

FIG. **5** is a partially cutaway schematic view showing the arrangement of a reticle alignment microscope **19** and an illumination system;

FIG. **6**A is a view showing an image observed by an image pickup element shown in FIG. **5**; FIG. **6**B is a waveform chart showing an image signal in the X direction corresponding to the image shown in FIG. **6**A;

FIGS. **7**A to **7**D are waveform charts showing a curve which is obtained by approximately measurement values upon measurement of the curve of a movable mirror, and image signals corresponding to respective portion of the movable mirror;

FIG. **8**A is a plan view showing a reticle **12** of the embodiment;

FIG. **8**B is an enlarged view showing a linear pattern **28**c of a curve measurement mark **28** in FIG. **8**A;

FIG. **8**C is an enlarged view showing another example of the curve measurement mark;

FIG. **8**D is an enlarged view showing still another example of the curve measurement mark;

FIG. **9** is a schematic view showing another example of a reticle alignment microscope;

FIG. **10**A is a plan view showing of the curve of movable mirror on the side of a reticle stage in a slit scan exposure type projection exposure apparatus;

FIG. **10**B is an enlarged view showing a distortion generated in a shot area formed on a wafer due to the curve of the movable mirror;

FIG. **10**C is a plan view showing the arrangement of shot areas on the wafer;

FIG. **11** is a perspective view showing a reticle loader system;

FIG. **12**A is a plan view showing the arrangement of alignment marks on a reticle;

FIG. 12B is a plan view showing the arrangement of alignment marks and the like on an area conjugate with the effective field of a projection optical system;

FIG. 12C is an enlarged view showing fine alignment marks 29A to 30A;

FIGS. 13A, 13B, 13C, 13D, 13E, and 13F are waveform charts showing various image pickup signals obtained from an image pickup element upon execution of rough alignment of a reticle;

FIG. 14A is an optical path chart showing the state of a laser beam between an interferometer for the x-axis on the side of a reticle stage and a movable mirror 21x;

FIG. 14B is an optical path chart showing a case wherein the movable mirror 21X is rotated from the state shown in FIG. 14A; and

FIGS. 15A, 15B, 15C, 15D, and 15E are views for explaining an operation for re-placing a reticle 12 by rotating a reticle fine driving state 11 when a pattern drawing area PA on the reticle 12 inclined with respect to a reticle coordinate system.

DESCRIPTION OF THE PREFERRED EMBODIMENTS

An embodiment of a projection exposure method according to the present invention will be described below with reference to the accompanying drawings. In this embodiment, the present invention is applied to a case wherein a pattern on a reticle is exposed onto a wafer using a slit-scan exposure type projection exposure apparatus.

FIG. 1 shows a projection exposure apparatus of this embodiment. Referring to FIG. 1, a pattern on a reticle 12 is illumination with exposure light EL from an illumination optical system ILS. The illumination optical system ILS forms a rectangular illumination area (to be referred to as a "slit-like illumination area" hereinafter) by the exposure light EL on the reticle 12. The reticle pattern and the surface of a wafer 5 are optically conjugate with each other with respect to a projection optical system 8. A reticle pattern image of the slit-like illumination area is projected and exposed onto the wafer 5 via the projection optical system 8.

In this case, the wafer 5 is scanned at a constant velocity V/β ($1/\beta$ is the reduction factor of the projection optical system 8) in the backward direction with respect to the plane of the drawing of FIG. 1 (in the backward direction with respect to the plane of the drawing in the Y-axis) in synchronism with the reticle 12 which is scanned relative to the slit-like illumination area of the exposure light EL at a constant velocity V in the forward direction with respect to the plane of the drawing of FIG. 1 (in the forward direction with respect to the plane of the drawing in the Y-axis).

Driving systems of the reticle 12 and the wafer 5 will be described below.

A reticle Y-driving stage 10, which is movable in the Y-axis direction (the direction perpendicular to the plane of the drawing of FIG. 1) is mounted on a reticle support table 9. A reticle fine driving stage 11 is mounted on the reticle Y-driving stage 10. The reticle 12 is held by, e.g., a vacuum chuck on the reticle fine driving stage 11. The reticle fine driving stage 11 is finely movable in the X direction parallel to the plane of the drawing of FIG. 1 in a plane perpendicular to the optical axis of the projection optical system 8, the Y direction perpendicular to the plane of the drawing, and the rotational direction (8 direction) in the X-Y plane. The reticle fine driving stage 11 performs position control of the reticle 12 in the X, Y, and θ direction by a very small amount with high accuracy.

A movable mirror 21 is arranged on the reticle fine driving stage 11.

An interferometer 14 arranged on the article support table 9 radiates a laser beam onto the movable mirror 21, and always monitors the positions, in the X, Y, and 8 directions, of the reticle fine driving stage 11 on the basis of light reflected by the movable mirror.

Position information S1 obtained by the interferometer 14 is supplied to a main control system 22A.

On the other hand, a wafer Y-axis driving stage 2, which is movable in the Y-axis direction, is mounted on a wafer support table 1. A wafer X-axis driving stage 3, which is movable in the X-axis direction, is mounted on the wafer Y-axis driving stage 2. A Zθ-axis driving stage 4 is arranged on the wafer X-axis driving stage 3. The wafer 5 is held on the ZS-axis driving stage 4 by vacuum chucking.

A movable mirror 7 is also fixed on the Zθ-axis driving stage 4, and the positions, in the X, Y and θ directions, of the Zθ-axis driving stage 4 are monitored by an interferometer 13 which is arranged outside the apparatus. Position information obtained by the interferometer 13 is also supplied to the main control system 22A. The main control system 22A controls the alignment operations of the wafer Y-axis driving stage 2 to the Zθ-axis driving stage 4 via a wafer driving device 22B and the like, and also controls the operations of the entire apparatus.

As will be described later, a reference or fiducial mark plate 6 is fixed on the Zθ-axis driving stage 4 so as to attain a correspondence between a wafer coordinate system and a reticle coordinate system. The reference mark plate 6 is arranged near the wafer 5. The wafer coordinate system is defined by coordinates measured by the interferometer 13 on the wafer side, and the reticle coordinate system is defined by coordinates measured by the interferometer 14 on the reticle side. Various reference marks are formed on the reference mark plate 6, as will be described later. These reference marks include a luminous reference mark. The luminous reference mark is a reference mark illuminated from the back side with illumination light guided to the Zθ-axis driving stage 4 side.

Reticle alignment microscopes 19 and 20 for simultaneously observing the reference marks on the reference mark plate 6 and marks on the reticle 12 are equipped above the reticle 12 of this embodiment.

In this case, deflection mirrors 15 and 16 for guiding detection light from the reticle 12 to the reticle alignment microscopes 19 and 20 are arranged. The deflection mirrors 15 and 16 are movable in the X direction. When the exposure sequence is started, the deflection mirrors 15 and 16 are respectively retreated from the exposure light EL by mirror driving devices 17 and 18 in accordance with an instruction from the main control system 22A.

Furthermore, an off-axis alignment device 34 for observating alignment marks (wafer marks) on the wafer 5 is arranged on the side surface portion, in the Y direction, of the projection optical system 8.

The mechanism and operation for performing alignment of the reticle 12 and measurement of the curve of the movable mirror (to be described later) will be described below.

FIG. 2A shows the arrangement of alignment marks (reticle marks) and curve measurement marks on the reticle 12, and FIG. 2B shows a slit-like illumination area 32 and

the like in an area **33**R conjugate with the effective exposure field of the projection optical system on the reticle. Assume that the scan direction is defined as a y direction, and a direction perpendicular to the y direction is defined as an x direction. Referring to FIG. **2**A, a light-shielding portion **31** is formed around a pattern area of a central portion on the reticle **12**. Marks formed outside the light-shielding portion **31** are classified into curve measurement marks **27** and **28**, and fine alignment marks **29**A, **29**B, **29**C, **29**D, **30**A, **30**B, **30**C, and **30**D. The curve measurement mark **27** on the right side is defined by a linear pattern **27**c elongated along the y direction as the scan direction, and cross patterns formed at the two end portions of the linear pattern. The curve measurement mark **28** on the left side is defined to have a linear pattern **28**c symmetrical with that of the curve measurement mark **27** on the right side.

As will be described later, the curve measurement marks **27** and **28** of this embodiment can also be used as alignment marks upon execution of coarse alignment (rough alignment) of the reticle **12**, i.e., as rouch search alignment marks.

The fine alignment marks **29**A and **29**B are formed between a light-shielding portion **31**R on the right side and one cross pattern of the curve measurement mark **27** so as to be close to each other in the y direction, and the fine alignment marks **29**C and **29**D are formed between the light-shielding portion **31**R on the right side and the other cross pattern of the curve measurement mark **27** so as to be close to each other in the y direction. The fine alignment marks **30**A to **30**D are formed on the left side to be symmetrical with these fine alignments marks **29**A to **29**D. Each of these fine alignment marks **29**A to **29**D and **30**A to **30**D is defined by arranging two sets of three linear patterns at a predetermined interval in the x direction, and arranging two sets of three linear patterns at a predetermined interval in the y direction, as shown in FIG. **2**C.

Upon execution of rough alignment of the reticle **12** in this embodiment, the cross patterns of the curve measurement mark **28** on the left side in FIG. **2**A are detected by the reticle alignment microscope (to be referred to as an "RA microscope" hereinafter) **20** in FIG. **1**. Thereafter, the cross patterns of the curve measurement mark **27** are moved to the observation area of the RA microscope **19**, and the position of the alignment mark **27** is similarly measured. In this case, a pattern-free portion of the reference mark plate **6** in FIG. **1** is moved into the exposure field of the projection optical system **8**, and is illuminated from its bottom portion. In this manner, the curve measurement marks **27** and **28** are illuminated from their rear surface side with illumination light emerging from the reference mark plate **6**.

In the above-mentioned sequence, the positions of the cross patterns of the curve measurement marks **27** and **28** with respect to the RA microscopes **19** and **20** in FIG. **1** can be obtained. More specifically, the positional relationship between the reticle **12** and the reticle coordinate system can be roughly determined in the above mentioned sequence. A rough correspondence between the RA microscopes **19** and **20** and the wafer coordinate system can be attained by measuring the reference marks on the reference mark plate **6** in FIG. **1** by the RA microscopes **19** and **20**. Thus, rough alignment that can avoid an overlap between the fine alignment marks **29**A to **29**D and **30**A to **30**D and the reference marks on the reference mark plate **6** is completed. A mark search sequence in the rough alignment will be described later.

The curve measurement sequence for the movable mirror and the fine alignment sequence will be described below. Prior to the description of these sequences, the detailed arrangement of the wafer stage and the reticle stage will be explained.

FIG. **3**A is a plan view of the wafer stage. Referring to FIG. **3**A, the wafer **5** and the reference mark plate **6** are arranged on the Zθ-axis driving stage **4**. An X-axis movable mirror **7**X and a Y-axis movable mirror **7**Y are fixed on the Zθ-axis driving stage **4**. On the wafer **5**, a slit-like illumination area **32**W corresponding to the slit-like illumination area **32** in FIG. **2**B is illuminated with exposure light, and observation areas **19**W and **20**W are respectively conjugate with observation areas **19**R and **20**R in FIG. **2**B.

Laser beam LWX and LW_{of} which are separated by an interval IL are radiated onto the movable mirror **7**X along optical paths which are parallel to the X-axis and respectively pass the optical axis of the projection optical system and the reference point of the alignment device **34**, and two laser beams LWY**1** and LWY**2** which are separated by the interval IL are radiated onto the movable mirror **7**Y along optical paths parallel to the Y axis. In exposure, the coordinate value measured by an interferometer using the laser beam LWX is used as the X-coordinate of the Zθ-axis driving stage **4**, and an average value (Y_1+Y_2) of coordinate values Y_1 and Y_2 measured by interferometers which respectively use the laser beams LWY**1** and LWY**2** is used as the Y coordinate. The rotational amount of the Zθ-axis driving stage in the rotational direction (θ direction) is measured based on e.g., the difference between the coordinate values Y_1 and Y_2. Based on these coordinates, the position, on the X-Y plane, and the rotational angle of the Zθ-axis driving stage **4** are controlled.

In particular, in the Y direction as the scan direction deterioration of accuracy caused by, e.g., an inclination upon scanning is prevented using the average value of the measurement results from the two interferometers. On the other hand, the position in the X-axis direction when the off-axis alignment device **34** is used is controlled based on the measurement value from a special-purpose interferometer using the letter beam LW_{of} so as to not cause a so-called Abbe's error.

FIG. **3**B is a plan view of the reticle stage. Referring to FIG. **3**B, the reticle fine driving stage **11** is mounted on the reticle Y-driving stage **10**, and the reticle **12** is held thereon. An x-axis movable mirror **21**x and two y-axis movable mirrors **21**y**1** and **21**y**2** are fixed to the reticle fine driving stage **11**. Laser beams LRx are radiated onto the movable mirror **21**x in a direction parallel to the x-axis, and laser beams LRy**1** and LRy**2** are radiated onto the movable mirrors **21**y**1** and **21**y**2** in a direction parallel to the y-axis.

As in the wafer stage, the coordinate, in the y direction, of the reticle fine driving stage **11** adopts an average value $(y_1+y_2)/2$ of coordinate values y_1 and y_2 measured by two interferometers using the laser beams LRy**1** and LRy**2**.

Also, a coordinate value measured by an interferometer **14**x using the two laser beams LRx in the x direction is used. At this time, an average value of the coordinate values measured using the two laser beams may be used, or the coordinate value may be obtained using either one laser beam LRx. In addition, the rotational amount, in the rotational direction (θ direction), of the reticle fine driving stage is measured based on e.g., the difference between the coordinate values y_1 and Y_2.

In this case, as the movable mirrors **21**y**1** and **21**y**2** for the y direction as the scan direction, corner cube type reflection members are used. The laser beams LRy**1** and LRy**2** reflected by the movable mirrors **21**y**1** and **21**y**2** are respec-

tively reflected by reflection mirrors **39** and **38**, and are returned. More specifically, the interferometers for the reticle are double-pass interferometers, thereby preventing positional shifts of the laser beams upon rotation of the reticle fine driving stage **11**. Note that the X-axis interferometer **14**x may comprise a double-pass interferometer.

As in the wafer stage, the slit-like illumination area **32** and the observation areas **19**R and **20**R of the RA microscopes **19** and **20** are arranged on the reticle **12**. The reticle **12** and the ZS-axis driving stage **4** in FIG. **3**A can be observed from only the observation areas **19**R and **20**R.

The curve of the movable mirror **21**x is measured by measuring the relationship between the reticle **12** and the Zθ-axis driving stage **4**, as described above, and alignment accuracy in exposure and rotational accuracy of the reticle **12** and wafer **5** can be improved.

FIG. **4**A shows a reticle image **12**W obtained by projecting the reticle **12** shown in FIG. **2**A onto the reference mark plate **6** shown in FIG. **3**A. FIG. **4**A illustrates mark images **29**AW to **29**DW conjugate with the fine alignment marks **29**A to **29**D in FIG. **2**A, and mark images **30**AW to **30**DW conjugate with the fine alignment marks **30**A to **30**D. Furthermore, FIG. **4**A illustrates mark images **27**W and **28**W conjugate with the curve measurement marks **27** and **28**.

FIG. **4**B shows the arrangement of reference marks on the reference mark plate **6**. On the reference mark plate **6** in FIG. **4**C, reference marks **35**E and **36**E are formed to be separated by the same interval, in the X direction, as that between the mark images **27**W and **28**W in FIG. **4**A. The reference mark **35**E is defined by two linear patterns of light-shielding portions arranged at a predetermined interval in the X direction, as shown in FIG. **4**C, and the same applies to the reference mark **36**E. These reference marks **35**E and **36**E are illuminated with illumination light of the same wavelength as that of the exposure light from the rear surface side.

Also, on the reference mark plate **6**, reference marks **35**A to **35**D and **36**A are formed to have substantially the same arrangement as that of the mark images **29**AW to **29**DW and **30**AW to **30**DW in FIG. **4**A. These reference marks are illuminated with illumination light of the same wavelength as that of the exposure light from the rear surface of the reference mark plate **6**. On the reference mark plate **6**, a reference mark **37**A is formed at a position separated by an interval IL in the Y direction as the scan direction from the middle point between the reference marks **35**A and **36**A. The interval IL is equal to a base line amount as an interval between the reference point in an image field of the projection optical system **8** and the reference point of the off-axis alignment device **34** in FIG. **1**. Similarly, reference marks **37**B, **37**C, and **37**D are respectively formed at positions separated by the interval IL in the Y direction from the middle point between the reference marks **35**B and **36**B, the middle point between the reference marks **35**C and **36**C, and the middle point between the reference marks **35**D and **36**D.

Then, reticle **12** is finally aligned by measuring the positional relationship between the fine alignment marks **29**A to **29**D and the corresponding reference marks **35**A to **35**D using the RA microscope **19**, and measuring the positional relationship between the fine alignment marks **30**A to **30**D and the corresponding reference marks **36**A to **36**D using the RA microscope **20**.

Upon measurement of the curve of the movable mirror **21**x, the positional shift amount between the reference mark **35**E (or **36**E) in FIG. **4**B and the linear pattern **27**c (or the linear pattern **28**c) of the curve measurement mark **27** on the side of the reticle **12** in FIGS. **2**A is detected by the RA microscope **19** (or the RA microscope **20**).

The arrangement of the RA microscope **19** and the like shown in FIG. **1** will be described in detail below for the purpose of explaining the method of obtaining the positional shift amount.

FIG. **5** shows the RA microscope **19** and its illumination system. Referring to FIG. **5**, illumination light EL of the same wavelength as that of the exposure light is guided from a portion outside the Zθ-axis driving stage **4** to the interior of the Zθ-axis during stage **4** via an optical fiber **44**. In place of the optical fiber **44**, the exposure light may be relayed by a lens system. The illumination light guided in this manner illuminates the reference marks **35**A to **35**D on the reference mark plate **6** via a lens **45**A, a beam splitter **45**B, and a lens **45**C, and the illumination light transmitted through the beam splitter **45**B illuminates the reference marks **36**A to **36**D on the reference mark plate **6** via lenses **45**D and **45**E, a mirror **45**F, and a lens **45**G. The illumination light can also illuminate the reference marks **35**E and **36**E.

For example, light transmitted through the reference mark **35**E forms an image of the reference mark **35**E on the linear pattern **27**c on the reticle **12** via the projection optical system **8**. Light from the optical image of the reference mark **35**E and the linear pattern **27**c reaches a half mirror **42** via a deflection mirror **15**, and lenses **40**A and **40**B. The light is split into two light beams by the half mirror **42**, and the two light beams are respectively incident on the image pickup surfaces of x- and y-axis image pickup elements **43**X and **43**Y, each comprising a two-dimensional CCD. Of these image pickup elements, on an image pickup screen **43**Xa of the image pickup element **43**X, the image of the reference pattern **27**c and an image **35**ER of the reference mark **35**E are projected, as shown in FIG. **6**A. In this case, the direction of the horizontal scan line of the image pickup screen **43**Xa of the x-axis image pickup element **43**X corresponds to the x direction, and the direction of the horizontal scan line of the image pickup screen of the y-axis image pickup element **43**Y corresponds to the y direction.

Therefore, the positional shift amount, in the x direction between the image **35**ER of the reference mark **35**E and the linear pattern **27**c can be calculated from an additive mean of an image pickup signal S4X from the image pickup element **43**X. The image pickup signal S4X is supplied to a signal processing device **41**. The image pickup signal S4X is detected to be a digital signal by analog/digital conversion in the signal processing device **41**. Image data on respective scan lines are added and averaged on the. X-axis in the signal processing device **41**, and the image signal S4X on the X-axis as the additive mean is as shown in FIG. **6**B. These image data are respectively processed as one-dimensional image processing signals. On FIG. **6**B, the abscissa of the image signal S4X corresponds to time t. However, when the width of the image pickup screen of the image pickup element **43**X is measured in advance, the abscissa can be regarded to plot a position x.

When the signal obtained as described above is subjected to arithmetic processing in the signal processing device **41**, a position x_3 in the x direction corresponding to the image of the linear pattern **27**c of the reticle **12** in FIG. **6**A, a position x_1 corresponding to the left pattern of the image **35**ER of the reference mark **35**E, and a position x_2 corresponding to the right pattern of the image **35**ER can be obtained. A relative positional shift amount Δx, in the x direction, between the linear pattern **27**c and the reference mark **35**E is given by:

$$\Delta x = x_3 - (x_1 + x_2)/2 \quad (1)$$

In this manner, the positional shift amount, in the x direction between the linear pattern **27**c of the curve mea-

surement mark **27** in FIG. **2**A and the projected image of the reference mark **35**E in FIG. **4**B can be obtained. Similarly, the positional shift amount, in the x direction, between the linear pattern **28**c of the curve measurement mark **28** in FIG. **2**A and the projected image of the reference mark **36**E in FIG. **4**B can be obtained using the RA microscope **20**.

Examples of a method of measuring the curved amount of the reflection surface of the movable mirror **21**x on the reticle stage side in FIG. **3**B using these potential shift amounts will be described below.

The first method of measuring the curve of the movable mirror **21**x is a method executed with reference to the linear pattern **27**c (or the linear pattern **28**c) of the curve measurement mark **27** in FIG. **2**A. More specifically, in this case, in a state wherein the image of the reference mark **35**E and the linear pattern **27**c are observed by the RA microscope **19** to monitor the positional shift amount Δx in the x direction therebetween, as shown in FIG. **5**, and in a state wherein the measurement value of the x-axis interferometer **14**x on the reticle side in FIG. **3**B is maintained to be a constant value, the reticle fine driving stage **11** is moved in the y direction as the scan direction. Then, positional shift amounts Δx_i, in the x direction, between the image of the reference mark **35**E and the linear pattern **27**c are calculated at a large number of measurement positions y_i in the y direction.

FIG. **7**A shows the results of plotting the positional shift amounts Δx_i at the measurement positions y_i, a line **70** is a straight line which extends straight in the y direction, and curve **71** is obtained by approximating a series of sampling points (points with marks x in FIG. **7**A). In the measurement data as the basis of the curve **71**, a positional shift amount Δx_1 from the straight line **70** is calculated to be the positional shift amount, in the x direction, between a middle point **72** of the image **35**ER of the reference pattern **35**E and the linear pattern **27**c in the image pickup signal S4X, as shown in FIG. **7**B. Similarly, positional shift amounts Δx_n and Δx_m are respectively calculated from image pickup signals shown in FIGS. **7**C and **7**D. FIGS. **7**B to **7**D show image pickup signals from the image pickup element **43**X. The sampling interval in the y direction is determined by the curvature to be calculated, and the measurement accuracy of the RA microscope **19** as an alignment sensor.

The respective relative positional shift amounts Δx_i are measured along the curve of the movable mirror **21**x, as indicated by the marks x in FIG. **7**A.

Upon calculation of the curve **71**, filtering is executed in a software manner in accordance with a variation of the positional shift amounts Δx_i. A function corresponding to the calculated curve **71** is approximately by a quadratic curve as a function of the position y. For example, a coefficient A of the term of y^2 of the approximated function is calculated, and when the reticle fine driving stage **11** is scanned in the y direction in slit-scan exposure, the reticle fine driving state **11** is finely driven in the x direction in accordance with the position in the y direction so as to cancel the curve of the movable mirror **21**x. In this manner, an intra-shot distortion of a pattern image exposed onto each shot area of the wafer **5** can be eliminated.

Referring to FIG. **7**A, the curve **71** may be divided at proper intervals in the y direction, and the respective curve sections may be linearly approximated to obtain a coefficient B at each position y. Correction may then be performed on the basis of the coefficient B in the slit-scan exposure.

When image sampling is performed, in order to average reticle drawing errors, additive mean values in the vertical direction may be calculated for scan lines on the entire image pickup screen. Alternatively, sampling may be performed while scanning the reticle **12**, and the sampled values may be averaged.

In the above-mentioned embodiment, the reticle fine driving stage **11** is scanned in the y direction while maintaining the measurement value, in the x direction, of the x-axis interferomenter **14**x to be a predetermined value. Conversely, the reticle fine driving stage **11** may be scanned in the y direction while the linear pattern **27**c is set at the middle point of the image **35**ER of the reference mark **35**E in FIG. **6**A. In this case, the positional shift amount Δx measured by the RA microscope **19** is always 0, and the measurement value, in the x direction, of the x-axis interferometer **14**x directly represents the curved amount of the movable mirror **21**x.

In the projection exposure apparatus, when heat is accumulated due to exposure light radiated onto the pattern formation surface of the reticle **12** in exposure, and a temperature change of the reticle stage itself (the reticle fine driving stage **11**) occurs, the curved state of the movable mirror **21**x may change. However, a temperature sensor or the like may be arranged on the reticle stage to measure the relationship between the temperature change amount and the change in curved state in advance, and the correction coefficient may be varied in accordance with the measurement result, thereby canceling the change in curved state. Furthermore, after the curve correction of the movable mirror **21**x, when another reticle is set and the same measurement is performed in the x- and y-axes, reticle drawing errors at the respective positions can be measured. Since the reticle drawing error between adjacent pattern portions is small, reticle drawing errors from a position near the curve measurement mark to the pattern portion are assumed to be almost the same and are grouped, and the error group may be corrected in slit-scan exposure, thus allowing reticle drawing error correction.

FIG. **10**A shows a case wherein the movable mirror **21**x on the reticle stage is curved. If the reflection surface of the movable mirror **21**x is parallel to the straight line **70** which is perfectly parallel to the y-axis, the pattern on the reticle **12** can be exposed on the wafer without any distortion by scanning the reticle fine driving stage **11** in the y direction in a state wherein the x coordinate measured by the laser beam LRx is maintained to be a predetermined value.

However, when the reflection surface of the movable mirror **21**x is curved to have a maximum shift amount Δx in the x direction, as indicated by a solid curve in FIG. **10**A, it is controlled to maintain the position, on the reflection surface, of the laser beam LRx from the interferometer to be the position of the straight line **70** indicated by a broken line upon scanning of the reticle **12**. Therefore, the reticle fine driving stage **11** is driven along a curved path in a direction opposite to the curve of the movable mirror **21**x. As a result, as shown in FIG. **10**B, each shot area **78** on the wafer has an intra-shot distortion according to the curvature of the moving path of the reticle fine driving stage **11**. As shown in FIG. **10**C, the intra-shot distortion is common to all shot areas **79** on the wafer **5**. In this case, if the characteristics of the intra-shot distortion vary among exposure apparatuses, such a variation results in a matching error between different layers on the wafer.

As described above, when the reticle fine driving stage **11** is scanned in the y direction in slit-scan exposure, the reticle fine driving stage **11** is finely driven in the x direction in accordance with the position in the y direction so as to cancel the curve of the movable mirror **21**x. Thus, the intra-shot distortion of the pattern image exposed onto each shot area is eliminated, and a matching error between different layers on the wafer can also be eliminated.

In the above-mentioned embodiment, the curve measurement marks **27** and **28** shown in FIG. **8**A are used as curve measurement marks, and for example, the linear pattern **28**c (see FIG. **8**B) of the curve measurement mark **28** is used as a reference upon measurement of the curve of the movable mirror. However, as a reference used upon measurement of the curve of the movable mirror, a multi-pattern **73** which is defined by aligning linear patterns, extending in the y direction, in the x direction at a predetermined interval, as shown in FIG. **8**C, may be used. When the multi-pattern **73** is used, and the measurement results of the linear patterns are averaged in the x direction, the curved amount of the movable mirror can be measured with higher accuracy. Also, as a reference used upon measurement of the curve of the movable mirror, a multi-line-and-space pattern **74**, which is defined by aligning line-and-space patterns, formed at a predetermined pitch the y direction, in the x direction at a predetermined interval, as shown in FIG. **8**D, may be used. The multi-line-and-space pattern **74** can be easily formed on, e.g., a reticle by an electron beam drawing device or the like.

In the above-mentioned embodiment, the positional shift amounts of the linear patterns **27**c and **28**c are calculated with reference to the reference marks **35**E and **36**E formed on the reference mark plate **6** on the wafer side. Alternatively, these reference marks may be arranged in the RA microscope.

FIG. **9** shows an RA microscope which comprises internal reference marks. Referring to FIG. **9**, illumination light from the linear pattern **27**c on the reticle **12** is reflected by the half mirror **15**, and forms an image of the linear pattern **27**c on an index plate **75** via lenses **40**C and **49**D. An index mark **76** defined by linear patterns aligned at a predetermined interval in a direction conjugate with the x direction on the reticle **12** is formed on the index plate **75**, and illumination light passing through the index plate **75** reaches the half mirror **42** via a mirror **77** and lenses **40**D and **40**E. The light is split into two light beams by the half mirror **42**, and these two beams are respectively incident on the image pickup surfaces of the x- and y-axis image pickup elements **43**X and **43**Y. Other arrangements are the same as those in the RA microscope **19** shown in FIG. **5**.

In the RA microscope shown in FIG. **9**, the positional shift amount of the linear pattern **27**c is detected with reference to the index mark **76**. Therefore, upon measurement of the curve of the movable mirror **21**x, the reference mark plate **6** on the wafer side need not be used.

In the above-mentioned embodiment, the curve measurement marks **27** and **28** are used. However, in FIG. **3**B, if the straightness of the movement, in the y direction, of the reticle fine driving stage **11** is good, when the measurement values in the x direction are monitored by the x-axis interferometer **14**x while the reticle fine driving stage **11** is simply scanned in the y direction, the measurement values directly represent the curved amount of the movable mirror **21**x.

Next, a sequence from loading of the wafer **5** and the reticle **12** to the end of alignment in the projection exposure apparatus of this embodiment will be explained below. First, the reticle **12** is pre-aligned with reference to its outer shape on a reticle loader (to be described later).

FIG. **11** shows a reticle loader system for loading the reticle **12** onto the reticle fine driving stage **11** shown in FIG. **1**. The reticle loader shown in FIG. **11** is constituted by two reticle arms **23**A and **23**B, an arm rotation shaft **25** coupled to these reticle arms **23**A and **23**B, and a rotation mechanism **26** for rotating the arm rotation shaft **25**. Vacuum chucking grooves **24**A and **24**B are respectively formed on the reticle placing surfaces of the reticle arms **23**A and **23**B, and the reticle arms **23**A and **23**B are supported to be independently rotatable via the arm rotation shaft **25**.

Upon loading of the reticle **12**, the reticle **12** is transferred from another reticle convey mechanism (not shown) onto the reticle arm **23**A at a position A**3**. In this case, the other reticle arm **23**B is used for unloading the reticle used in the previous process. Then, the reticle **12** is aligned to predetermined accuracy on the reticle arm **23**A with reference to its outer shape by a reticle outer shape pre-alignment mechanism arranged near the position A**3**, and thereafter, the reticle **12** is vacuum-chucked on the reticle arm **23**A. The reticle outer shape pre-alignment mechanism is disclosed in, e.g., FIG. **7** of U.S. Pat. No. 4,716,299, although not shown in FIG. **11**. The rotation mechanism **26** rotates the reticle arm **23**A via the arm rotation shaft **25** to convey the reticle **12** to a position B**3** in the Y direction (in the direction of the reticle fine driving stage **11** in FIG. **1**).

At this time, since the vacuum chucking groove **24**A is located at a position in the direction perpendicular to the chucking position on the reticle fine driving stage **11** and outside the pattern area of the reticle **12**, the reticle arm **23**A can freely load/unload the reticle **12** onto the reticle fine driving stage **11** in a state wherein the reticle fine driving stage **11** is moved to a front portion in the y direction as the scan direction. When the reticle **12** has reached a position above the reticle fine driving stage **11** (see FIG. **1**), the arm rotation shaft **25** is moved downward in the −Z direction. Then, the reticle **12** is placed on the vacuum chucking surface on the reticle fine driving stage **11**, and the reticle arm **23**A retreats after the end of transfer of the reticle **12**. Thereafter, the reticle fine driving stage **11** conveys the reticle **12** in the direction of a position C**3**. In this case, the reticle arms **23**A and **23**B are independently driven to respectively perform, e.g., reticle loading and unloading operations at the same time, thus increasing the reticle exchange speed.

Then, alignment of the reticle **12** is performed, and a mechanism and operation therefor will be described below. As described above, rough alignment of the reticle **12** can be performed using the curve measurement marks **27** and **28**. Thus, the rough alignment mechanism and operation using the curve measurement marks (rough search alignment marks) **27** and **28** will be described in detail below, partially repeating the above-mentioned description.

After the reticle **12** is placed on the reticle fine driving stage **11**, the curve measurement mark (rough search alignment mark) **28** on the left side in FIG. **2**A is detected by the RA microscope **20** in FIG. **1**. FIG. **2**B shows the observation areas **19**R and **20**R, on the reticle **12**, of the RA microscopes **19** and **20** in this case. Upon execution of rough search of the reticle **12**, the curve measurement marks (rough search alignment marks) **27** and **28** are respectively located outside the observation areas **19**R and **20**R and outside the area **33**R conjugate with the effective exposure field. Although the curve measurement marks (rough search alignment marks) **27** and **28** must have a large size for rough search, if the size of the exposure field of the projection optical system is increased accordingly, this results in an increase in cost. Thus, a procedure upon execution of rough search in this embodiment will be described below with reference to FIGS. **12**A and **12**B.

FIG. **12**A is an enlarged view showing a portion near one cross pattern of the curve measurement mark (rough search alignment mark) **28**, and FIG. **12**B shows FIG. **12**A in the reduced scale. Referring to FIGS. **12**A and **12**B, the widths, in the x and y directions, of a square effective field **20**R_{ef} of

the RA microscope **20** are represented by W, and the design value of a sum of a drawing error and a setting error of a pattern with respect to the outer shape of the reticle **12** is represented by ΔR. Therefore, as shown in FIG. **12**B, a square area having the width ΔR always includes a crossing point **28**a of one cross pattern of the curve measurement mark (rough search alignment mark) **28**. An object to be detected is the x- and y-coordinates of the crossing point **28**a of the cross pattern. In this embodiment, the reticle **12** is stepped via the reticle fine driving stage **11** in a direction that crosses, at 45°, the two straight lines passing the crossing point **28**a of the curve measurement mark (alignment mark) **28**, thereby scanning the effective field $20R_{ef}$ having the width W relative to a position near the crossing point **28**a obliquely with respect to the x- and y-axes. Upon execution of the oblique scanning, the x- and y-coordinates of the crossing point **28**a are obtained as those of the reticle fine driving stage **11** when the two straight lines passing the crossing point **28**a cross reference point in the effective field $20R_{ef}$.

For this purpose, if the integral part of a positive real number a is expressed by INT(a), the number of search frames as the minimum number of times of scanning the square area having the width ΔR with the effective field $20R_{ef}$ having the width W is given by {INT(ΔR/W)+1}. The number of search frames is calculated in advance. Then, {INT(ΔR/W)+1} effective fields AS, BS, C**5**, . . . each having the width W are set in a square area having the width ΔR and including the effective field B**5** (FIG. **12**B) at substantially the central position, so that the edge portions of the effective areas slightly overlap each other in the 45° direction with respect to the x- and y-axes. The reticle fine driving stage **11** (FIG. **1**) is driven by the stepping method under the open-loop control, and an image in each effective field is sampled while setting each effective field in the effective field $20R_{ef}$ in FIG. **12**A in turn.

As shown in FIG. **12**B, the crossing point **28**a of the curve measurement mark (alignment mark) **28** to be searched is present within at least a ΔR×ΔR wide search range, and the curve measurement mark (alignment mark) **28** is sufficiently larger than the search range. Therefore, as can be understood from the above description, when the effective field is stepped in the oblique direction with respect to curve measurement mark (alignment mark) **28**, the coordinates of the crossing point **28**a of the curve measurement mark (alignment mark) **28** can be detected by the minimum number of frames. Image processing at that time can be one-dimensional image processing for an image signal obtained by adding all scan lines in the pickup frame.

FIGS. **13**A to **13**F show various image signals obtained by adding all scan lines. FIGS. **13**A and **13**D show image signals along the x and y directions obtained in the effective field A**5** in FIG. **12**B, FIGS. **13**B and **13**E show image signals along the x and y directions obtained in the effective field B**5** in FIG. **12**B, and FIGS. **13**C and **13**F show image signals along the x and y directions obtained in the effective field C**5** in FIG. **12**B. The x-coordinate of the crossing point **28**a is calculated from the image signal shown in FIG. **13**B, and the y-coordinate of the crossing point **28**a is calculated from the image signal shown in FIG. **13**F. Similarly, the RA microscope **20** detects the x- and y-coordinates of a crossing point **28**b of the other cross pattern of the curve measurement mark (alignment mark) **28** shown in FIG. **2**A.

After the two-dimensional coordinate positions of the crossing points **28**a and **28**b of the cross patterns at the two ends of the curve measurement mark (alignment mark) **28** are detected, as described above, the curve measurement mark (alignment mark **27**) is, in turn, moved to the observation area of the RA microscope **19**, and the two-dimensional coordinate positions of the crossing points **27**a and **27**b of the cross patterns at the two ends of the curve measurement mark (alignment mark) **27** are similarly detected. In this case, a pattern-free portion of the reference mark plate **6** in FIG. **1** is moved into the exposure field of the projection optical system **8**, and is illuminated from its bottom portion. In this manner, the curve measurement marks **27** and **28** are illuminated from their rear surface side with illumination light emerging from the reference mark plate **6**.

In the above-mentioned sequence, the positional relationship of the curve measurement marks (alignment marks) **27** and **28** with respect to the observation areas **19**R and **20**R of the RA microscopes **19** and **20** in FIG. **2**B, and a rough positional relationship of the curve measurement marks (alignment marks) **27** and **28** with respect to the reticle coordinate system can be obtained. A rough correspondence between the observation areas **19**R and **20**R of the RA microscopes and the wafer coordinate system can be attained by measuring the reference marks on the reference mark plate **6** (FIG. **1**) using the RA microscopes **19** and **20**. Thus, rough alignment that can avoid an overlap between the fine alignment marks **29**A to **29**D and **30**A to **30**D and the reference marks (**35**A to **35**D and **36**A to **36**D) on the reference mark plate **6** in FIG. **4**B is completed.

In this embodiment, in order to reduce the lens diameter of the projection optical system **8**, alignment marks on the reticle **12** are classified into the curve measurement marks (alignment marks) and fine alignment marks. However, when the projection optical system **8** can have a large lens diameter, these curve measurement marks (alignment marks) and fine alignment marks can be common marks. In this case as well, the technique for searching the curve measurement marks (alignment marks) by stepping the stage in the oblique direction (FIGS. **12**A and **12**B) can be adopted, and the RA microscopes **19** and **20** can simultaneously search the curve measurement marks (alignment marks).

The allowable value of a rotational angle when the reticle **12** of this embodiment is placed on the reticle fine driving stage **11** will be examined below. For this purpose, the arrangement of an interferometer for measuring the coordinate, in the x direction, of the reticle fine driving stage **11** on which the reticle **12** is placed, as shown in FIG. **3**B, will be partially described in detail below with references to FIGS. **14**A and **14**B.

As shown in FIG. **14**A, the x-axis interferometer (not shown in FIGS. **14**A and **14**B) radiates a laser beam LRx of p-polarized light onto a polarization beam splitter **100**. The laser beam LRx is transmitted through a junction surface **100**a of the polarized beam splitter **100**a, passes through a quaterwave plate **101**, and is then incident on the x-axis movable mirror **21**x in a state of circularly polarized light. The laser beam LRx reflected by the movable mirror **21**x is reflected by the junction surface **100**a of the polarization beam.splitter **100** via a quaterwave plate **71** in a state of s-polarized light, and propagates toward a corner cube **102**. The laser beam LRx reflected by the corner cube **102** is reflected by the junction surface **100**a of the polarization beam splitter **100**, and is incident on the movable mirror **21**x in a state of circularly polarized light via the quaterwave plate **101**.

Thereafter, the laser beam LRx reflected by the movable mirror **21**x is incident on the junction surface **100**a of the polarization beam splitter **100** in a state of p-polarized light

via the quaterwave plate **71**, and the laser beam LRx transmitted through the junction surface **100**a is returned to a receiver of the x-axis interferometer (not shown). More specifically, when the movable mirror **21**x is displayed by Δx in the x direction, since the optical path length of the laser beam LRx changes by $4\cdot\Delta x$, the x-axis interferometer on the reticle side also serves as a double-pass interferometer. In this case, if the interval, in the y direction, between the middle point in the y direction between the laser beam LRx emerging from the interferometer and the laser beam LRx returned to the interferometer, and the vertex of the corner cube **102** is represented by La, and the interval, in the x direction, from the movable mirror **21**x to the vertex of the corner cube **102** is represented by Lb, a distance L_T of the path of the laser beam LRx after the laser beam LRx is reflected by the movable mirror **21**x until the laser beam LRx passes through the junction surface **100**a of the polarization beam splitter is given by the following equation:

$$L_T = La + Lb \tag{2}$$

In this case, as shown in FIG. **14**B, when the reflection surface of the movable mirror **21**x is largely rotated at an an angle θ about an axis perpendicular to the plane of the drawing of FIG. **14**B with respect to a plane perpendicular to the incident laser beam LRx, the position, in the y direction, of the laser beam LRx returned to the interferometer laterally shifted by an interval ΔL from a case wherein the angel θ is 0. The interval ΔL can be expressed as follows using the above-mentioned distance L_T:

$$\Delta L = 4\cdot L_T\cdot\theta \tag{3}$$

Therefore, when the rotational angle θ of the movable mirror **21**x exceeds an allowable value θ_1, the lateral shift amount ΔL of the laser beam LRx incident on the receiver of the interferometer exceeds a predetermined allowable amount. Thus, a reference beam and the laser beam LRx for length measurement can no longer sufficiently overlap each other, resulting in a length measurement error of the interferometer. In this case, the allowable value θ_1 of the rotational angle which does not cause an interferometer error is calculated in advance, and the rotation error of the reticle **12** must be controlled not to exceed the calculated allowable value θ_1 upon execution of rough alignment of the reticle **12**. The movable mirror **21**x is rotated when the pattern drawing area on the reticle **12** has been rotated with respect to the reticle coordinate system defined by the measurement value of the interferometer on the reticle side and when the reticle fine driving stage **11** is rotated in a direction to cancel the rotational angle of the pattern drawing area. Therefore, in order to control the rotational angle θ of the movable mirror **21**x to be equal to or smaller than the allowable value θ_1, the rotational angle of the pattern drawing area on the reticle **12** must be controlled to be equal to or smaller than the allowable value θ_1 upon execution of rough alignment of the reticle **12**.

In this embodiment, when the reticle **12** is placed on the reticle fine driving stage **11**, the rotational angle of the pattern drawing area on the reticle **12** is controlled to be equal to or smaller than the allowable value θ_1. The technique for attaining this control will be described below with reference to FIGS. **15**A, **15**B, **15**C, **15**D, and **15**E.

As shown in FIG. **15**A, in an initial state of reticle loading, the reticle **12** is aligned with reference to its outer shape, and is vacuum-chucked on the reticle arm **23**A. For the sake of descriptive convenience, a pattern drawing area PA is largely inclined with respect to the outer shape of the reticle **12**. In this case, the x-axis is assumed in a direction parallel to the laser beam LRx in FIG. **3**B, the y-axis is assumed in a direction parallel to the laser beams LRy**1** and LRy**2**, and the reticle coordinate system is formed by these x- and y-axes. The inclination of the drawing area PA is expressed by the crossing angle between a straight line passing the two crossing points **27**a and **27**b at the two ends of one curve measurement mark (rough search alignment mark) **27** (or a straight line passing the two crossing points **28**a and **28**b at the two ends of the other curve measurement mark (rough search alignment mark) **28**), and the y-axis of the reticle coordinate system. In this initial state, an x_{RS}-axis and a y_{Rs}-axis are assumed on the reticle fine driving stage **11** to be parallel to the x- and y-axes, respectively.

Subsequently, as shown in FIG. **15**B, after the reticle **12** is placed on the reticle fine driving stage **11** by the reticle arm **23**A, the reticle arm **23**A is escaped to the position B**3**. In this state, the above-mentioned rough alignment is executed for the alignment marks **27** and **28**, and a rotation angle (rotation error) ϕ of the drawing area PA on the reticle **12** with respect to the y-axis of the reticle coordinate system is measured. The rotational angle ϕ_1 is obtained to be, e.g., an angle defined between a straight line connecting the crossing points **27**a and **27**b at the two ends of the alignment mark **27**, and the y-axis. For the purpose of descriptive convenience, assume that the drawing area PA is rotated clockwise with respect to the y-axis.

When the rotational angle ϕ_1 exceeds the allowable value θ_1, the reticle **12** is temporarily detached from the reticle fine driving state **11** using the reticle arm **23**A, as shown in FIG. **15**C. Then, the reticle fine driving stage **11** is rotated by a mechanical limit angle ϕ_2 of the rotational angle in the direction of the rotational angle ϕ_1. More specifically, the y_{Rs}-axis on the reticle fine driving stage **11** is rotated clockwise by the limit angle ϕ_2 with respect to the y-axis. Thereafter, as shown in FIG. **15**D, the reticle **12** is attached on the reticle fine driving stage **11** again using the reticle arm **23**A. The reticle fine driving stage **11** is then rotated counterclockwise by the limit angle ϕ_2 with respect to the y-axis, and is restored to the original position. Thus, as shown in FIG. **15**E, the angle of the drawing area PA of the reticle **12** with respect to the y-axis of the reticle coordinate system becomes smaller than the allowable value θ_1.

When the angle of the drawing area PA of the reticle **12** with respect to the y-axis of the reticle coordinate system exceeds the allowable value θ_1 even in the state shown in FIG. **15**E, the operations shown in FIGS. **15**C to **15**E can be repeated again. By the operation for rotating the reticle fine driving stage **11** by one revolution, the rotation error of even a reticle which has a rotation error twice the allowable value θ_1 can be suppressed to be equal to or smaller than the allowable value θ_1. Furthermore, when the operation for rotating the reticle fine driving stage **11**, and restoring the stage **11** to an original position is repeated n times (n is an integer equal to or larger than 2), the rotation error of the drawing area PA on the reticle **12** can be suppressed to be equal to or smaller than the allowable value θ_1 regardless of the magnitude of the rotation error in the initial state of the reticle **12**. Thereafter, the above-mentioned fine alignment is executed, thus completing the alignment of the reticle **12**.

When the rotational angle ϕ_1 of the drawing area PA on the reticle **12** satisfies $\theta_1<\phi_1\leqq\phi_2$, the reticle fine driving stage **11** may be rotated by the rotational angle ϕ_1 of the drawing area PA in place of being rotated by the mechanical limit angle ϕ_2.

As described above, in this embodiment, since the positions of reticle marks are detected using the image process-

ing system while stepping the reticle **12** in an obligue direction, measurement upon execution of rough alignment of a reticle in the slit-scan exposure type projection exposure apparatus can be realized. Furthermore, in this embodiment, the image processing system for fine alignment is also used for rough alignment, and a servo control system required in a synchronous detection type alignment system like that described in U.S. Pat. No. 4,710,029 is omitted. Thus, the arrangement is simplified, and the manufacturing cost can be reduced. When the rotational angle of the drawing area on the reticle **12** exceeds an allowable value, the reticle **12** is detached from the reticle fine driving stage **11**, and after the reticle fine driving stage **11** is rotated, the reticle **12** is attached again. Since this sequence is adopted, a failure in reticle alignment can be avoided.

In the above-mentioned embodiment, as shown in FIGS. **15**B and **15**C, after the reticle **12** is detached from the reticle fine driving stage **11**, the reticle fine driving stage **11** is rotated by the rotational angle ϕ_2. Alternatively, after the reticle fine driving stage **11** is rotated in advance by $-\phi_2$, the reticle **12** may be detached. In this case, as an operation corresponding to FIGS. **15**D and **15**E, after the reticle fine driving stage **11** is rotated by the rotational angle ϕ_2 to restore an original state, the reticle **12** is attached again onto the reticle fine driving stage **11**. With this method as well, the rotational angle of the drawing area on the reticle **12** can be controlled to be equal to or smaller than the allowable value.

In the above-mentioned embodiment, as shown in FIGS. **15**A to **15**E, when the rotational angle of the pattern drawing area PA on the reticle **12** with respect to the reticle coordinate system exceeds the allowable value, the reticle fine driving stage **11** is rotated. Alternatively, the reticle **12** may be rotated in a direction opposite to the rotational angel by the reticle arm **23**A side from which the reticle **12** is detached. For this purpose, a rotation mechanism for rotating the article **12** on the reticle arm **23**A may be added.

Also, for a reticle having a reticle drawing error of the same tendency with respect to the outer shape reference, a rotation error caused by the reticle drawing error may be stored, and the reticle fine driving stage **11** may be driven in the direction of an axis defined by the rotation error. Thus, the reticle need not be re-placed on the reticle fine driving stage **11**. Furthermore, a tracking error caused by shifting the movable mirror **21**x in a non-scan direction in slit-scan exposure due to the rotation error can be decreased.

As described above, the present invention is not limited to the above-mentioned embodiment, and may adopt various arrangements within the spirit and scope of the invention.

What is claimed is:

1. A method of driving a mask stage using an exposure device having said mask stage which mounts a mask formed with a predetermined pattern and is movable in a predetermined scan direction, a movable mirror which is arranged on said mask stage and has a reflection surface substantially parallel to the scan direction, measurement means for measuring a coordinate position, in a direction perpendicular to the scan direction, of said mask stage by radiating a measurement beam onto said movable mirror, a substrate stage which mounts a photosensitive substrate and is movable in a direction substantially parallel to the scan direction, an illumination system for illuminating a predetermined area on the mask with illumination light, and a projection optical system for projecting the pattern on the mask onto the photosensitive substrate.

said exposure device for sequentially exposing the pattern on the mask onto the photosensitive substrate while synchronously scanning said mask stage and said substrate stage in the scan direction with respect to an optical axis of said projection optical system, comprising the steps of:

the first step of placing the mask on said mask stage;

the second step of calculating a curved amount of said movable mirror by measuring the coordinate position, in the direction perpendicular to the scan direction, of said mask stage by said measurement means while scanning said mask stage in the scan direction; and

the third step of moving said mask stage in the direction perpendicular to the scan direction to correct the curved amount of said movable mirror calculated in the second step when said mask stage is scanned in the scan direction with respect to the optical axis;

wherein the mask has a measurement mark, and

the second step includes the step of calculating the curved amount of said movable mirror with reference to the measurement mark.

2. A method of driving a mask stage using an exposure device having said mask stage which mounts a mask formed with a predetermined pattern and is movable in a predetermined scan direction, a movable mirror which is arranged on said mask stage and has a reflection surface substantially parallel to the scan direction, measurement means for measuring a coordinate position, in a direction perpendicular to the scan direction, of said mask stage by radiating a measurement beam onto said movable mirror, a substrate stage which mounts a photosensitive substrate and is movable in a direction substantially parallel to the scan direction, an illumination system for illuminating a predetermined area on the mask with illumination light, and a projection optical system for projecting the pattern on the mask onto the photosensitive substrate,

said exposure device for sequentially exposing the pattern on the mask onto the photosensitive substrate while synchronously scanning said mask stage and said substrate stage in the scan direction with respect to an optical axis of said projection optical system, comprising the steps of:

the first step of placing the mask on said mask stage;

the second step of calculating a curved amount of said movable mirror by measuring the coordinate position, in the direction perpendicular to the scan direction, of said mask stage by said measurement means while scanning said mask stage in the scan direction; and

the third step of moving said mask stage in the direction perpendicular to the scan direction to correct the curved amount of said movable mirror calculated in the second step when said mask stage is scanned in the scan direction with respect to the optical axis;

wherein the mask has a measurement mark, and

the second step includes the step of scanning said mask stage while the measurement mark is aligned to a reference position, and calculating the curved amount of said movable mirror on the basis of the coordinate position, in the direction perpendicular to the scan direction, of said mask stage measured by said measurement means.

3. A method of aligning a mask with respect to a coordinate system on the side of a mask stage as pre-processing for exposing a pattern on the mask onto a photosensitive substrate using an exposure device having said mask stage which mounts the mask formed with a predetermined pattern and is movable in a predetermined scan direction, a substrate stage which mounts the photosensitive substrate and is

movable in a direction substantially parallel to the scan direction, an illumination system for illuminating a predetermined illumination area on the mask with illumination light, a projection optical system for projecting the pattern on the mask onto the photosensitive substrate, and observation means for observing a mark on the mask, the exposure device for sequentially exposing the pattern on the mask onto the photosensitive substrate while synchronously scanning said mask stage and said substrate stage in the scan direction with respect to an optical axis of said projection optical system, comprising:

the first step of placing, as the mask, a mask formed with a first alignment mark having two linear patterns which cross each other, on said mask stage;

the second step of moving the two linear patterns [in a direction to cross each other on the first alignment mark on the mask] relative to an observation area of said observation means *in a direction which is transverse to each of the two linear patterns*;

the third step of calculating a coordinate position, in the coordinate system on the side of said mask stage, of a crossing point of the two linear patterns of the first alignment mark by processing image data obtained by said observation means; and

the fourth step of aligning the mask to the coordinate system on the side of said mask stage on the basis of the coordinate position of the crossing point of the two linear patterns of the first alignment mark.

4. A method according to claim **3**, wherein the mask has a second alignment mark having two linear patterns which cross each other, at a position different from the first alignment mark;

said method further comprises:

the fifth step of moving the two linear patterns [in a direction to cross each other on the second alignment mark on the mask] relative to an observation area of said observation means *in a direction which is transverse to each of the two linear patterns*, and

the sixth step of calculating a coordinate position, in the coordinate system on the side of said mask stage, of a crossing point of the two linear patterns of the second alignment mark by processing image data obtained by said observation means; and

the fifth step comprises the step of aligning the mask to the coordinate system on the side of said mask stage on the basis of the coordinate position of the crossing point of the two linear patterns of the first alignment mark and the coordinate position of the crossing point of the two linear patterns of the second alignment mark.

5. A method of aligning a mask with respect to a coordinate system on the side of a mask stage as pre-processing for exposing a pattern on the mask onto a photosensitive substrate using an exposure device having said mask stage which mounts the mask formed with a predetermined pattern and is movable in a predetermined scan direction, a substrate stage which mounts the photosensitive substrate and is movable in a direction substantially parallel to the scan direction, an illumination system for illuminating a predetermined illumination area on the mask with illumination light, and a projection optical system for projecting the pattern on the mask onto the photosensitive substrate, said exposure device for sequentially exposing the pattern on the mask onto the photosensitive substrate while synchronously scanning said mask stage and said substrate stage in the scan direction with respect to an optical axis of said projection optical system, comprising:

the first step of placing, as the mask, a mask formed with an alignment mark, on said mask stage; and

the second step of calculating a rotational angle of the mask with respect to the coordinate system on the side of said mask stage by calculating a coordinate position of said alignment mark, and when the rotational angle calculated in the second step exceeds a predetermined allowable value, said method further comprising:

the third step of unloading the mask from said mask stage;

the fourth step of rotating said mask stage by a predetermined rotational angle in a direction of the rotational angle calculated in the second step; and

the fifth stage of placing the mask on said mask stage again, and rotating said mask stage in a direction opposite to the rotational direction in the forth step.

6. A method of aligning a mask with respect to a coordinate system on the side of a mask stage as pre-processing for exposing a pattern on the mask onto a photosensitive substrate using an exposure device having said mask stage which mounts the mask formed with a predetermined pattern and is movable in a predetermined scan direction, a substrate stage which mounts the photosensitive substrate and is movable in a direction substantially parallel to the scan direction, an illumination system for illuminating a predetermined illumination area on the mask with illumination light, and a projection optical system for projecting the pattern on the mask onto the photosensitive substrate, said exposure device for sequentially exposing the pattern on the mask onto the photosensitive substrate while synchronously scanning said mask stage and said substrate stage in the scan direction with respect to an optical axis of said projection optical system, comprising:

the first step of placing, as the mask, a mask formed with an alignment mark, on said mask stage; and

the second step of calculating a rotational angle of the mask with respect to the coordinate system on the side of said mask stage by calculating a coordinate position of said alignment mark, and when the rotational angle calculated in the second step exceeds a predetermined allowable value, said method further comprising:

the third step of rotating said mask stage in a direction opposite to the rotational angle calculated in the second step;

the fourth step of unloading the mask from said mask stage; and

the fifth step of rotating said mask stage in a direction opposite to the rotational direction in the third step, and placing the mask on said mask stage again.

7. A method of driving a mask when a mask stage carrying a mask having a predetermined pattern and a mark for a measurement and a substrate stage carrying a substrate are synchronously moved, comprising the steps of:

measuring a positional deviation of said mask stage along a direction perpendicular to a movement direction, by moving said mask stage along the movement direction while measuring a position of said mask stage along the direction substantially perpendicular to a movement direction and a position of said mark relating to a direction substantially perpendicular to the movement direction; and

correcting the positional deviation when said mask stage and said substrate stage are synchronously moved, based on said measuring of positional deviation of said mask stage, including said measuring of said position of said mask stage and said measuring of said position of said mark.

8. A method according to claim **7**, wherein said mark is elongated along the movement direction.

9. An exposing apparatus synchronously moving a mask stage carrying a mask having a predetermined pattern and a mark for a measurement and a substrate stage carrying a substrate, to form the pattern image onto said substrate, comprising:

a position measuring system for measuring a position of said mask stage along a direction substantially perpendicular to a movement direction;

a mark detecting system for measuring a position of said mark; and

a control system for obtaining a positional deviation of said mask stage along the direction substantially perpendicular to the movement direction based on the result of the measurement of said mark detecting system *and the result of the measurement of said position measuring system*, and for correcting the positional deviation, and for synchronously moving said mask stage and said substrate stage.

10. Apparatus for driving a mask stage using an exposure device having said mask stage which mounts a mask formed with a predetermined pattern and is movable in a predetermined scan direction, a movable mirror which is arranged on said mask stage and has a reflection surface substantially parallel to the scan direction, said reflection surface having an undesirable curvature, a measurement system to measure a position, in a direction perpendicular to the scan direction, of said mask stage by radiating a measurement beam onto said reflection surface, and a substrate stage which mounts a sensitive substrate, said exposure device being operative for exposing the pattern on the mask onto the sensitive substrate while scanning said mask stage in the scan direction, said apparatus comprising a device connected to said mask stage that moves said mask stage in the direction perpendicular to the scan direction in accordance with said undesirable curvature of said reflection surface so as to reduce an undesirable effect on a pattern exposed onto the sensitive substrate, when said mask stage is scanned in the scan direction for an exposure.

11. Apparatus for aligning a mask on a mask stage as pre-processing for exposing a pattern on a mask onto a sensitive substrate using an exposure device having said mask stage which mounts the mask formed with said pattern and is movable in a predetermined scan direction, and a substrate stage which mounts the sensitive substrate, said exposure device being operative for exposing the pattern on the mask onto the sensitive substrate while scanning said mask stage in the scan direction, said apparatus comprising a device connected to said mask stage which rotates said mask stage by a predetermined rotational angle in a rotational direction without the mask mounted on the mask stage and which rotates said mask stage in a direction opposite to the rotational direction after the mask is mounted on the mask stage.

12. A scanning exposure method in which an exposure beam and an object are moved relatively in a predetermined direction during a scanning exposure, the method comprising:

measuring information relating to a curvature of a reflection surface which is substantially parallel to the predetermined direction on a supporting member for supporting the object, the reflection surface being used for obtaining positional information of the supporting member; and

controlling an operation, in which the supporting member is used, based on the measured information.

13. A scanning exposure method according to claim 12, wherein the object includes a mask having a pattern.

14. A scanning exposure method according to claim 13, wherein the pattern of the mask is transferred onto a sensitive substrate and wherein movement of the supporting member is controlled during the scanning exposure, based on said measured information, such that undesirable distortion does not occur in a pattern transferred on the sensitive substrate.

15. A scanning exposure method according to claim 12, wherein the operation includes the scanning exposure.

16. A scanning exposure method according to claim 12, wherein the operation includes a control of a position of the supporting member during the scanning exposure.

17. A scanning exposure method according to claim 12, wherein the measuring is performed while said supporting member is moved in said predetermined direction.

18. A scanning exposure method according to claim 12, wherein the measuring is performed by using a mark of the object supported by said supporting member.

19. A scanning exposure method according to claim 12, wherein the measuring includes obtaining positional information of said reflection surface in a direction perpendicular to said predetermined direction at plural positions in said predetermined direction.

20. A scanning exposure method according to claim 19, wherein said positional information of said reflection surface includes a deviation from a reference position of said reflection surface in the direction perpendicular to said predetermined direction.

21. A scanning exposure method according to claim 12, wherein said exposure beam includes light.

22. A scanning exposure method according to claim 12, wherein said reflection surface is used for obtaining positional information of said supporting member in a direction orthogonal to said predetermined direction by using an interferometer.

23. A scanning exposure method according to claim 12, further comprising:

detecting temperature information of said supporting member to cope with a change in curvature of said reflection surface based on the detecting.

24. A method for manufacturing a device using a method according to claim 12.

25. A method of making a scanning exposure apparatus in which an exposure beam and an object are moved relatively in a predetermined direction during a scanning exposure, the method comprising:

providing a supporting member which is movable in the predetermined direction while supporting the object;

providing a reflection surface which is substantially parallel to the predetermined direction on the supporting member and which is used for obtaining positional information of the supporting member; and

providing a measuring system which detects information relating to a curvature of the reflection surface.

26. A method according to claim 25, wherein the object includes a mask having a pattern.

27. A method according to claim 25, wherein said measuring system includes an interferometer for obtaining positional information of said supporting member in a direction orthogonal to said predetermined direction by using said reflection surface.

28. A method according to claim 25, further comprising:

providing a control system that is connected with the supporting member and the measuring system and that

controls an operation, in which the supporting member is used, based on the information detected by the measuring system.

29. A method according to claim 28, wherein the operation includes a control of a position of the supporting member during the scanning exposure.

30. A method according to claim 25, wherein said supporting member has a first driving mechanism for moving said object in said predetermined direction and a second driving mechanism for fine moving said object in said predetermined direction, in a direction orthogonal to said predetermined direction, and in a rotational direction.

31. A method according to claim 30, further comprising:

providing a control system, connected with the measuring system and the second driving mechanism, which controls the second driving mechanism based on the information detected by the measuring system.

32. A scanning exposure apparatus in which an exposure beam and an object are moved relatively in a predetermined direction during a scanning exposure, the apparatus comprising:

a supporting member which is movable in the predetermined direction while supporting the object;

a reflection surface which is substantially parallel to the predetermined direction on the supporting member and which is used for obtaining positional information of the supporting member; and

a measuring system which detects information relating to a curvature of the reflection surface.

33. A scanning exposure apparatus according to claim 32, wherein the object includes a mask having a pattern.

34. A scanning exposure apparatus according to claim 32, wherein said measuring system includes an interferometer for obtaining positional information of said supporting member in a direction orthogonal to said predetermined direction by using said reflection surface.

35. A scanning exposure apparatus according to claim 32, wherein said measuring system includes a mark sensor which detects a mark of the object supported by said supporting member.

36. A scanning exposure apparatus according to claim 32, further comprising:

a control system that is connected with the supporting member and the measuring system and that controls an operation, in which the supporting member is used, based on the information detected by the measuring system.

37. A scanning exposure apparatus according to claim 36, wherein the operation includes the scanning exposure.

38. A scanning exposure apparatus according to claim 36, wherein the operation includes a control of a position of the supporting member during the scanning exposure.

39. A scanning exposure apparatus according to claim 32, wherein said exposure beam includes light.

40. A scanning exposure apparatus according to claim 32, wherein said supporting member has a first driving mechanism for moving said object in said predetermined direction and a second driving mechanism for fine moving said object in said predetermined direction, in a direction orthogonal to said predetermined direction, and in a rotational direction.

41. A scanning exposure apparatus according to claim 40, further comprising:

a control system, connected with the measuring system and the second driving mechanism, which controls the second driving mechanism based on the information detected by the measuring system.

42. A scanning exposure apparatus according to claim 33, further comprising:

a corner cube type reflection member on the supporting member; and

an interferometer device, optically connected with said reflection member, which is used for obtaining positional information of the supporting member in the predetermined direction.

43. A scanning exposure apparatus according to claim 33, further comprising:

a plurality of interferometers, functionally associated with the supporting member, which are used for obtaining positional information of the supporting member in the predetermined direction.

44. A scanning exposure apparatus according to claim 33, further comprising:

a temperature sensor, connected with the supporting member, which is used for detecting a change in the curvature of the reflection surface.

45. A scanning exposure method comprising:

moving an exposure beam and an object relatively for a scanning exposure in a predetermined direction, the object being supported by a supporting member and a reflection surface being formed on the supporting member to obtain positional information of the supporting member; and

controlling a movement of the supporting member, during the scanning exposure, based on information relating to a curvature of the reflection surface.

46. A scanning exposure method according to claim 45, wherein the object includes a mask having a pattern.

47. A method according to claim 46, wherein the pattern of the mask is transferred onto a sensitive substrate and wherein movement of the supporting member is controlled during the scanning exposure, based on said measured information, such that undesirable distortion does not occur in a pattern transferred on the sensitive substrates.

48. A scanning exposure method according to claim 45 further comprising:

measuring the information relating to the curvature of the reflection surface.

49. A scanning exposure method according to claim 48, wherein the measuring is performed while said supporting member is moved in said predetermined direction.

50. A scanning exposure method according to claim 48, wherein the measuring is performed by using a mark of the object supported by said supporting member.

51. A scanning exposure method according to claim 48, wherein the measuring includes obtaining positional information of said reflection surface in a direction perpendicular to said predetermined direction at plural positions in said predetermined direction.

52. A scanning exposure method according to claim 51, wherein said positional information of said reflection surface includes a deviation from a reference position of, said reflection surface in the direction perpendicular to said predetermined direction.

53. A scanning exposure method according to claim 45, wherein the reflection surface is substantially parallel to the predetermined direction on the supporting member.

54. A scanning exposure method according to claim 45, wherein said exposure beam includes light.

55. A scanning exposure method according to claim 45, wherein said reflection surface is used for obtaining positional information of said supporting member in a direction orthogonal to said predetermined direction by using an interferometer.

56. A scanning exposure method according to claim 45, further comprising:

detecting temperature information of said supporting member to respond to a change in curvature of said reflection surface based on the detecting.

57. A method of making a scanning exposure apparatus in which an exposure beam and an object are moved relatively in a predetermined direction during a scanning exposure, the method comprising:

providing a supporting member which is movable in the predetermined direction while supporting the object;

providing a reflection surface which is formed on the supporting member and which is used for obtaining positional information of the supporting member during the scanning exposure; and

providing a control system, functionally associated with the supporting member, which controls a movement of the supporting member based on information relating to a curvature of the reflection surface.

58. A method according to claim 57, wherein the object includes a mask having a pattern.

59. A method according to claim 57, further comprising:

providing a measuring system, functionally connected with the control system, which detects the information relating to the curvature of the reflection surface.

60. A method according to claim 59, wherein said measuring system includes an interferometer for obtaining positional information of said supporting member in a direction orthogonal to said predetermined direction by using said reflection surface.

61. A method according to claim 59, wherein the control system controls the movement of the supporting member based on the information detected by the measuring system.

62. A method according to claim 57, wherein the reflection surface is substantially parallel to the predetermined direction on the supporting member.

63. A method according to claim 57, wherein said supporting member has a first driving mechanism for moving said object in said predetermined direction and a second driving mechanism for fine moving said object in said predetermined direction, in a direction orthogonal to said predetermined direction, and in a rotational direction.

64. A method according to claim 63, wherein the control system controls the second driving mechanism based on the information relating to the curvature of the reflection surface.

65. A scanning exposure apparatus in which an exposure beam and an object are moved relatively in a predetermined direction during a scanning exposure, the apparatus comprising:

a supporting member which is movable in the predetermined direction while supporting the object;

a reflection surface which is formed on the supporting member and which is used for obtaining positional information of the supporting member during the scanning exposure; and

a control system, functionally associated with the supporting member which controls a movement of the supporting member based on information relating to a curvature of the reflection surface.

66. A scanning exposure apparatus according to claim 65, wherein the object includes a mask having a pattern.

67. A scanning exposure apparatus according to claim 65, further comprising:

a measuring system, functionally connected with the control system, which detects the information relating to the curvature of the reflection surface.

68. A scanning exposure apparatus according to claim 67, wherein said measuring system includes an interferometer for obtaining positional information of said supporting member in a direction orthogonal to said predetermined direction by using said reflection surface.

69. A scanning exposure apparatus according to claim 67, wherein said measuring system includes a mark sensor which detects a mark of the object supported by said supporting member.

70. A scanning exposure apparatus according to claim 67, wherein the control system controls the movement of the supporting member based on the information detected by the measuring system.

71. A scanning exposure apparatus according to claim 65, wherein the reflection surface is substantially parallel to the predetermined direction on the supporting member.

72. A scanning exposure apparatus according to claim 65, wherein said exposure beam includes light.

73. A scanning exposure apparatus according to claim 65, wherein said supporting member has a first driving mechanism for moving said object in said predetermined direction and a second driving mechanism for fine moving said object in said predetermined direction, in a direction orthogonal to said predetermined direction, and in a rotational direction.

74. A scanning exposure apparatus according to claim 73, wherein the control system controls the second driving mechanism based on the information relating to the curvature of the reflection surface.

75. A scanning exposure apparatus according to claim 65, further comprising:

a corner cube type reflection member on the supporting member; and

an interferometer, optically connected with said reflection member, which is used for obtaining positional information of the supporting member in the predetermined direction.

76. A scanning exposure apparatus according to claim 65, further comprising:

a plurality of interferometers, functionally associated with the supporting member, which are used for obtaining positional information of the supporting member in the predetermined direction.

77. A scanning exposure apparatus according to claim 65, further comprising:

a temperature sensor, connected with the supporting member, which is used for detecting a change in the curvature of the reflection surface.

78. A scanning exposure method in which an object is moved relative to an exposure beam during a scanning exposure, the method comprising:

moving a stage in a moving direction prior to the scanning exposure, the object being supported on the stage, a reflection surface being formed on the stage to obtain positional information of the stage and the reflection surface being substantially parallel to the moving direction;

measuring positional information of the stage in a direction crossing the moving direction by applying a measuring beam of an interferometer to the reflection surface, during the movement of the stage prior to the scanning exposure; and

controlling, during the scanning exposure, movement of the stage based on the measured positional information.

79. A method according to claim 78, wherein the positional information measured by said interferometer prior to

the scanning exposure changes in accordance with surface state of said reflection surface.

80. A method according to claim 78, wherein said stage is moved along a guide upon moving in said moving direction.

81. A scanning exposure method according to claim 78, wherein the object is a mask having a pattern.

82. A scanning exposure method in which a mask and a substrate are moved synchronously relative to an exposure beam during a scanning exposure, the method comprising:

moving a stage in a moving direction prior to the scanning exposure, the mask being supported on the stage, a reflection surface being formed on the stage to obtain positional information of the stage and the reflection surface being substantially parallel to the moving direction;

measuring positional information of the stage in a direction crossing the moving direction by applying a measuring beam of an interferometer to the reflection surface, during the movement of the stage prior to the scanning exposure; and

adjusting, during the scanning exposure, positional relationship between the mask and the substrate based on the measured positional information.

83. A method according to claim 82, wherein the positional information measured by said interferometer prior to the scanning exposure changes in accordance with surface state of said reflection surface.

84. A method according to claim 82, wherein the positional relationship between the mask and the substrate is adjusted based on the measured positional information such that undesirable distortion does not occur in a shot area formed on said substrate by the scanning exposure.

85. A method according to claim 82, wherein the positional relationship of the mask and the substrate is adjusted by controlling a position of the stage based on the measured positional information.

86. A scanning exposure method according to claim 82, wherein the interferometer has measuring axes perpendicular to the moving direction.

87. A microdevice manufacturing method including an exposure process in which a mask and a substrate are moved in respective scanning directions relative to an exposure beam during a scanning exposure in order to form a device pattern on the substrate, the method comprising:

moving a stage in the scanning direction of the mask prior to the scanning exposure, the mask being supported on the stage, a reflection surface being formed on the stage, and the reflection surface being substantially parallel to the scanning direction of the mask;

measuring positional information of the stage in a direction crossing the scanning direction by applying a measuring beam of an interferometer to the reflection surface, during the movement of the stage prior to the scanning exposure; and

adjusting, during the scanning exposure, positional relationship between the mask and the substrate based on the measured positional information.

88. A scanning exposure method in which an object is moved relative to an exposure beam in a scanning direction during an exposure, the method comprising:

during the exposure, moving the object in the scanning direction by using a first driving mechanism;

during the exposure, measuring position of the object by applying a measuring beam of an interferometer to a reflection surface which is substantially parallel to the scanning direction, the reflection surface being moved in the scanning direction relative to the measuring beam; and

during the exposure, moving the object in a non-scanning direction perpendicular to the scanning direction by using a second driving mechanism in order to compensate for a curvature of said reflection surface.

89. A scanning exposure method according to claim 88, wherein the second driving mechanism can finely move the object in the scanning direction, the non-scanning direction, and in a rotational direction.

90. A scanning exposure method according to claim 88, wherein the second driving mechanism includes a holding member which holds the object, and wherein the reflection surface is formed on the holding member.

91. A scanning exposure method according to claim 90, further comprising:

prior to the exposure, moving the holding member in the scanning direction, while applying the measuring beam to the reflection surface, wherein the object is moved by using the second driving mechanism during the exposure, based on output of the interferometer obtained by moving the holding member in the scanning direction prior to the exposure.

92. A scanning exposure method according to claim 90, wherein the interferometer has measuring axes perpendicular to the scanning direction.

93. A scanning exposure method according to claim 88, further comprising:

prior to the exposure, measuring information on the curvature of the reflection surface, and wherein during the exposure, the object is moved in the non-scanning direction based on the measured information on the curvature.

94. A scanning exposure method according to claim 88, wherein the object includes a mask having a pattern.

95. A scanning exposure method in which a mask and a substrate are moved in respective scanning directions relative to an exposure beam during an exposure, the method comprising:

during the exposure, moving the mask in the scanning direction by using a first driving mechanism;

during the exposure, measuring position of the mask by applying a measuring beam of an interferometer to a reflection surface extending substantially parallel to the scanning direction, the reflection surface being moved in the scanning direction relative to the measuring beam; and

during the exposure, moving the mask by using a second driving mechanism in order to compensate for a curvature of said reflection surface.

96. A scanning exposure method according to claim 95, wherein the mask is moved in a direction perpendicular to the scanning direction by the second driving mechanism.

97. A scanning exposure method according to claim 95, wherein the mask is moved using the second driving mechanism such that desirable distortion does not occur in a shot area to be formed on the substrate by the scanning exposure.

98. A scanning exposure method according to claim 95, wherein the second driving mechanism can finely move the object in the scanning direction, in a direction perpendicular to the scanning direction, and in a rotational direction.

99. A scanning exposure method according to claim 95, wherein the second driving mechanism includes a holding member which holds the mask, and wherein the reflection surface is formed on the holding member.

100. A scanning exposure method according to claim 99, further comprising:

prior to the exposure, moving the holding member in the scanning direction, while applying the measuring beam

to the reflections surface, wherein the mask is moved by using the second driving mechanism during the exposure, based on output of the interferometer obtained by moving the holding member in the scanning direction prior to the exposure.

101. A scanning exposure method according to claim 99, wherein the interferometer has measuring axes perpendicular to the scanning direction.

102. A scanning exposure method according to claim 95, further comprising:

prior to the exposure, measuring information on the curvature of the reflection surface, and wherein during the exposure, the mask is moved based on the measured information on the curvature by using the second driving mechanism.

103. A microdevice manufacturing method including an exposure process in which a mask and a substrate are moved in respective scanning directions relative to an exposure beam during a scanning exposure in order to form a device pattern on the substrate, the method comprising:

during the exposure, moving the mask in the scanning direction by using a first driving mechanism;

during the exposure, measuring position of the mask by applying a measuring beam of an interferometer to a reflection surface extending substantially parallel to the scanning direction, the reflection surface being moved in the scanning direction relative to the measuring beam; and

during the exposure, moving the mask by using a second driving mechanism in order to compensate for a curvature of said reflection surface.

104. A method of making a scanning exposure device that is operative for exposing a pattern on a mask onto a sensitive substrate, comprising:

providing a mask stage that is movable in a predetermined scan direction and on which a mask formed with a predetermined pattern is mountable;

providing a movable mirror that is arranged on said mask stage and that has a reflection surface substantially parallel to the scan direction, said reflections surface having an undesirable curvature;

providing a measurement system to measure a position, in a direction perpendicular to the scan direction, of said mask stage by radiating a measurement beam onto said reflection surface;

providing a substrate state on which a sensitive substrate is mountable; and

providing a driver to move said mask stage in a direction perpendicular to the scan direction in accordance with said undesirable curvature of said reflection surface so as to reduce an undesirable effect on a pattern exposed onto the sensitive substrate, when said mask stage is scanned in the scan direction for an exposure.

105. A method of manufacturing a semiconductor device that employs a sensitive substrate, using an exposure device having a mask stage which mounts a mask that is formed with a predetermined pattern and is movable in a predetermined scan direction, a movable mirror which is arranged on said mask stage and has a reflection surface substantially parallel to the scan direction, said reflection surface having an undesirable curvature, a measurement system to measure a position, in a direction perpendicular to the scan direction, of said mask stage by radiating a measurement beam onto said reflection surface, and a substrate stage which mounts said sensitive substrate, said exposure device being operative for exposing the pattern on the mask onto the sensitive substrate while scanning said mask stage in the scan direction, said method including:

placing the mask on said mask stage; and

moving said mask stage in a direction perpendicular to the scan direction in accordance with said undesirable curvature of said reflection surface so as to reduce an undesirable effect on a pattern exposed onto the sensitive substrate, when said mask stage is scanned in the scan direction for an exposure.

* * * * *