SPRUSON & FERGUSON

Australia

Patents Act 1990

NOTICE OF ENTITLEMENT

I, John Gordon Hinde, of Spruson & Ferguson, St Martins Tower, 31 Market Street, Sydney, New South Wales 2000, Australia, being the patent attorney for the Applicant(s)/Nominated Person(s) in respect of Application No 19030/92 state the following:-

The Applicant(s)/Nominated Person(s) has/have entitlement from the actual inventor(s) as follows:-

The Applicant(s)/Nominated Person(s) is/are the assignee(s) of the actual inventor(s).

The Applicant(s)/Nominated Person(s) is/are the applicant(s) of the application(s) listed in the Declaration under Article 8 of the PCT. The basic application(s) listed on the Declaration under Article 8 of the PCT is/are the first application(s) made in a Convention country in respect of the invention.

DATED this Sixth day of January 19 93

.....

John Gordon Hinde

IRN: 256859 INSTR CODE: 63981

6

665P

AU9219030

(12) PATENT ABRIDGMENT (11) Document No. AU-B-19030/92
(19) AUSTRALIAN PATENT OFFICE (10) Acceptance No. 664842

(54) Title
PROCESS AND VALVE DEVICE FOR CLEANING A DOUBLE-SEAT VALVE

International Patent Classification(s)
(51)[5] F16K 003/30 F16K 003/24 F16K 025/00 F16K 029/00

(21) Application No. : 19030/92 (22) Application Date : 05.06.92

(87) PCT Publication Number : WO92/21900

(30) Priority Data

(31) Number	(32) Date	(33) Country
4118874	07.06.91	DE GERMANY

(43) Publication Date : 08.01.93

(44) Publication Date of Accepted Application : 07.12.95

(71) Applicant(s)
OTTO TUCHENHAGEN GMBH & CO KG

(72) Inventor(s)
HANS OTTO MIETH

(74) Attorney or Agent
SPRUSON & FERGUSON , GPO [illegible] 498, SYDNEY NSW 2001

(56) Prior Art Documents
US 5085241
US 4552167
US 4460014

(57) Claim

1. A process for cleaning a double seat valve equipped with first and second serially effecting closure elements controllable by means of first and second rods, said first and second closure elements enclosing a leakage cavity between them, said method comprising the steps of:

performing a partial stroke with at least one said closure element, said partial stroke making a substantial part of a seat area assigned to said at least one closure element accessible to a detergent stream, said partial stroke being performed while maintaining the sealing at said seat area, and with said first rod leading through a first passageway from a first assigned section of the valve casing, and said second rod leading through a second passageway from a second assigned section of the valve casing, wherein said partial stroke also clears one of said first and second passageways such that said detergent stream is branched off through said cleared passageway out of said first or second assigned section of the valve casing, cleaning said cleared first or second passageway and at least one of the following sections:

- the other said passageway;
- said leakage cavity; and
- said accessible seat area.

.../2

16. A valve device adapted to carry out the process of any one of claims 1, 2 or 5, said device comprising first and second closure elements enclosing a leakage cavity between them, and first and second rods leading from a valve casing towards one side of said valve, said first and second rods connected with control devices, wherein:

said first closure element is driven independently from said second closure element by means of said first rod, said first rod leading through a first passageway from a first assigned section of the valve casing;

said second closure element is driven by said second rod and connected with said second rod by means of a pipe, said pipe coaxially surrounding said second rod and leading through a second passage from a second assigned section of the valve casing, and wherein:

said first passageway comprises a connection to said leakage cavity through an annular gap between said first rod and said second rod, said second rod being arranged coaxially within said first rod, and a connection to said second passageway through the interior of said pipe and through openings in a wall of said pipe, said valve device being adapted such that a partial stroke of said first closure element directed opposite to the opening movement of the valve clears said first passageway, allowing a detergent stream to flow.

OPI DATE 08/01/93 APPLN. ID 19030/92
AOJ DATE 25/02/93 PCT NUMBER PCT/EP92/01275
AU9219030

E

(51) Internationale Patentklassifikation 5 : F16K 1/44

A1

(11) Internationale Veröffentlichungsnummer: WO 92/21900

(43) Internationales Veröffentlichungsdatum: 10. Dezember 1992 (10.12.92)

(21) Internationales Aktenzeichen: PCT/EP92/01275

(22) Internationales Anmeldedatum: 5. Juni 1992 (05.06.92)

(30) Prioritätsdaten:
P 41 18 874.8 7. Juni 1991 (07.06.91) DE

(71) Anmelder *(für alle Bestimmungsstaaten ausser US)*: OTTO TUCHENHAGEN GMBH & CO KG [DE/DE]; Am Industriepark 2-10, D-2059 Büchen (DE).

(72) Erfinder; und
(75) Erfinder/Anmelder *(nur für US)*: MIETH, Hans, Otto [DE/DE]; Sandkrug 3, D-2058 Schnakenbek (DE).

(81) Bestimmungsstaaten: AT (europäisches Patent), AU, BE (europäisches Patent), BR, CA, CH (europäisches Patent), DE (europäisches Patent), DK (europäisches Patent), ES (europäisches Patent), FI, FR (europäisches Patent), GB (europäisches Patent), GR (europäisches Patent), HU, IT (europäisches Patent), JP, KR, LU (europäisches Patent), MC (europäisches Patent), NL (europäisches Patent), NO, PL, RO, RU, SE (europäisches Patent), US.

Veröffentlicht
Mit internationalem Recherchenbericht.
Vor Ablauf der für Änderungen der Ansprüche zugelassenen Frist. Veröffentlichung wird wiederholt falls Änderungen eintreffen.

664842

(54) Title: PROCESS FOR CLEANING A DOUBLE SEAT VALVE AND VALVE DEVICE FOR CARRYING OUT THE PROCESS

(54) Bezeichnung: VERFAHREN ZUR REINIGUNG EINES DOPPELSITZVENTILS UND VENTILVORRICHTUNG ZUM DURCHFÜHREN DES VERFAHRENS

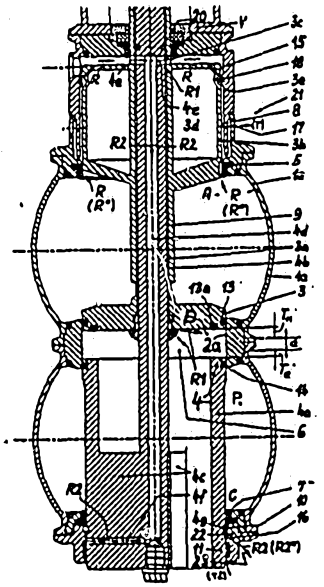

(57) Abstract

Disclosed are a process for cleaning a double seat valve, in particular a low-leakage or non-leaking double seat valve; and a valve device for carrying out the process. The aim is to ensure among other things that the relevant areas of the double seat valve can be cleaned with the minimum of detergent and/or disinfectant, in the interests of economy and the environment. To this end, provision is made in the process to clear a passageway, which leads off from part of the valve casing, by partially opening a closure element; the detergent stream flows through this passageway and cleans both the passageway (A or C) of the rod at its branching off point and at least one of the following areas: the other rod pas-

Procedure for Cleaning a Double Seat Valve and Valve Arrangement for Implementing the Procedure

Field of the Invention

The invention concerns a procedure for cleaning a double seat valve and to a valve arrangement for carrying out the procedure.

Background of the Invention

A method of the type characterized above is known from DE 31 08 778 C2. This procedure solves the problem of cleaning both seat surfaces of the closing members in a valve of the type under discussion simultaneously. In doing so, the cleansing and/or disinfecting agent is introduced either from outside the double seat valve through the leakage hollow space or through a valve housing part to both exposed seats (compare Figures 1-5a of the drawings).

In EP-A-O 208 126, the procedure known from DE 31 08 778 C2 is further developed in such a way that in a double seat valve equipped with a slider and a seat plate, for the purposes of cleaning the seat of the slide type closing member, the seat is movable only in the direction of the associated valve housing, while the seat plate remains on its seat surface. The cleansing agent is introduced from outside of the double seat valve via the leakage hollow space to the exposed seating surface. This as well as the older procedure contributes to cleansing a relevant double seat valve area, namely the seat area. Nonetheless, in practice it is necessary to include other relevant areas in the cleaning procedure, those of the rod passage guides through the associated valve housing parts.

In valves with slide type closing members, it is necessary to take special precautions so that the compressive forces exerted by the fluid in the conduits upon the closing members can be absorbed. These forces may be compensated for either through suitable measures in the valve drive or through pressure compensating measures on the closing member in the

AUSTRALIAN PATENT OFFICE

measures on the closing member in the valve housing area (cf. EP-A-00 39 319, Figure 1; EP-A-0 208 126, Fig. 3.2). The former measure leads to driving gears of relatively large dimensions, while pressure-compensating measures on the closing member naturally require large rod guide passages, which are problematic simply because of their large sealing length with regard to their ability to be cleansed and their safety with reference to mixing product and cleaning fluid.

It is known from EP-A-00 39 319 that a chamber should be placed between the seals of the pressure compensating piston which can be rinsed by cleansing agents. In order to ensure sufficient cleansing agent throughput, there must be a sufficiently large static pressure where the cleansing agent enters. Nonetheless, for safety reasons, it is generally desirable that the cleansing agent is subject to as little pressure as possible on the rod seal facing the interior area of the valve housing. In any case, one must nonetheless take care that at certain time intervals the area behind the seal, with its relatively large circumferential length (into which, because of the actuating movement of the valve, product can occasionally be dragged), and the contact surfaces between seal and rod can be subjected to or irrigated by cleansing agents. It is shown in DE 37 01 027 A1 (cf. Figures 7 and 8) how two particular sealing points arranged in series on the side of the housing which act together with a slide type closing member whose intermediate space can be rinsed from time to time in the area of one of the sealing points without having to expose the entire seating area of the closing member. While the previously cited figures show a one piece seal with two sealing points, the possibility of seal arrangements with two separate seals follows from the introduction of the description and the claims. Separate cleansing of two seals arranged at a distance on the side of the housing interacting with a slide-like closing member, or with a rod guided out of

AUSTRALIAN PATENT OFFICE

cleansing agent is explained in greater detail in publication WO 88/05512 (cf. e.g. Figures 21, 22; 25, 26 and 59, 60), which claims priority for the above named DE 37 01 0027.

Finally, it can be seen in publication DE-U-88 13 258 how a double seat valve having a closing member constructed as a seat plate and as a slider, where the compressive forces on the slider are compensated by a pressure compensation cylinder constructed on the slider, can be subjected to a cleansing in the seat region of the slider and in the region of the pressure compensation piston guide passage through the valve housing parts. In this publication, it is seen that two parallel cleansing streams (r_1, r_2) branch off from the lower valve housing part. The stream (r_1) proceeds to the valve region through the exposed seat surface of the slide type closing member over the leakage hollow space and a pipe leading downward from the valve housing part. The other stream (r_2) proceeds to this region over the exposed guide for the pressure compensation piston out of the valve housing part.

This well known solution possesses several disadvantages. First, the cleanser stream (r_1) which passes through the exposed seat surface of the slide type closing member is difficult to measure, meaning that an uncontrolled waste of cleanser with associated environmental pollution may occur. Second, a second parallel cleanser stream (r_2) is necessary to cleanse an additional critical area of the double seat valve, the guide passage area of the pressure compensation piston of the one closing member. In addition, further equally critical areas of the double seat valve remain uncleansed. These critical areas which are uncleansed can be the seat area of the closing member (constructed as a seat plate), which sometimes comes into contact with the product. In most instances, however, the critical areas of the valve which remain uncleansed include the guide of the closing member activation rod through the overlying valve housing part and the sealing area between the activation rod of the slider-form closing member and the seat plate pipe surrounding this rod.

Proceeding from the aforementioned disadvantages and state of the art requirements, the present invention seeks to create a procedure of the type characterized in the introduction for ensuring the cleansing the relevant areas of a double seat valve with a minimal and economical use of cleanser and/or disinfectant which last, but not least, is environmentally friendly.

Summary of the Invention

There is disclosed herein a process for cleaning a double seat valve equipped with first and second serially effecting closure elements controllable by means of first and second rods, said first and second closure elements enclosing a leakage cavity between them, said method comprising the steps of:

AUSTRALIAN PATENT OFFICE

member constructed as a seat plate, which occasionally comes into contact with product. In any case, these areas include the guide of the closing member activation rod through the overlying valve housing part and the sealing area between the activation rod of the slider-form closing member and the seat plate pipe surrounding this rod.

Proceeding from the aforementioned disadvantages and state of the art requirements, the present invention seeks to create a procedure of the type characterized in the introduction for ensuring the cleansing the relevant areas of a double seat valve with a minimal and economical use of cleanser and/or disinfectant which last, but not least, is environmentally friendly.

This task is solved by features under the heading of claim 1. Advantageous development of the procedure is the subject matter of claims 2-7. A valve arrangement for implementing the proposed procedure is attained by applying features covered under the heading of claim 8 or 9, while advantageous specific embodiments of the valve arrangement are the subject matter of further subclaims.

With the proposed procedure it is possible to cleanse the relevant areas of the double seat valve using a single cleansing agent stream, obtained using the partial stroke movement of a slide type closing member on its rod guide passage out of its associated valve housing part. By means of the partial stroke the guide passage (A or C) of the operating rod of the closing member is exposed to the valve housing, permitting the cleanser stream to enter there in order to cleanse the activation rod guide at the branch off point, and at least one of the following areas, the other rod guide passage, the leakage hollow space and the seat area, which has been made accessible.

The proposed procedure can be used to particular advantage in an initial refinement when the two valve

AUSTRALIAN PATENT OFFICE

said second closure element is driven by said second rod and connected with said second rod by means of a pipe, said pipe coaxially surrounding said second rod and leading through a second passage from a second assigned section of the valve casing, and wherein:

said first passageway comprises a connection to said leakage cavity through an annular gap between said first rod and said second rod, said second rod being arranged coaxially within said first rod, and a connection to said second passageway through the interior of said pipe and through openings in a wall of said pipe, said valve device being adapted such that a partial stroke of said first closure element directed opposite to the opening movement of the valve clears said first passageway, allowing a detergent stream to flow.

There is still further disclosed herein a valve device adapted to carry out the process of claim 1 or any one of claims 3 to 6, said valve device comprising first and second closure elements enclosing a leakage cavity between them, and first and second rods leading from an assigned section of the valve casing towards one side of said valve, said rods connected with control devices, wherein:

said first closure element is driven by means of said first rod, said first rod leading through a first passageway in a first assigned section of the valve casing;

said second closure element is driven by means of said second rod and connected with said second rod by means of a pipe, said pipe coaxially surrounding said second rod and leading through a second passageway from the second assigned section of the valve casing, said valve device further comprising;

a drilling in said second rod provided along the length thereof, one side of said drilling connected with said first passageway and another side of said drilling connected with said second passageway, wherein the connection path between said drilling and said first passageway comprises a branching off point from which another connection to an annular gap formed between the first rod and the second rod is provided, said second rod being coaxially arranged within said first rod, said annular gap providing a connection to the leakage cavity, said valve device being adapted such that, at a partial stroke of said first closure element directed opposite to the opening movement of the valve, said first passageway, or at a partial stroke of said second closure element, said second passageway, is cleared, allowing a detergent stream that is divided into first and second subsidiary streams at said branching off point to flow.

With the proposed procedure it is possible to cleanse the relevant areas of the double seat valve using a single cleansing agent stream, obtained using the partial stroke movement of a slide type closing member on its rod guide passage out of its associated valve housing part. By means of the partial stroke the guide passage (A or C) of the operating rod of the closing member is exposed to the valve housing,

AUSTRALIAN PATENT OFFICE

permitting the cleanser stream to enter there in order to cleanse the activation rod guide at the branch off point, and at least one of the following areas, the other rod guide passage, the leakage hollow space and the seat area, which has been made accessible.

The proposed procedure can be used to particular advantage in an initial refinement when the two valve housing parts are basically arranged vertically one upon the other and cleansing agent is available in the upper valve housing part. In this case, the cleansing stream cleanses successively, without further branching, in any order (preferably proceeding downward) at least one of the relevant areas of the double seat valve. Since the stream is conveyed to the seat area which has been rendered accessible basically as a spray stream, and to the two successive areas as a quasi swarming film under the influence of gravity, no harmful elevations in pressure occur in this proceeding. Nonetheless, this advantageous procedure variant is dependent upon the position of the valves and is hence restricted to a specific if relatively large number of applications.

If, as the proposed method alternatively likewise implies, the cleanser stream can only be obtained at the other, lower rod guide passage (C), whereby at least the upper rod guide (A) is cleansed and subsequently, the cleanser stream continues downward into the seat region which has been made accessible, or into the leakage hollow space, then it is necessary that the rod guide passage (A) be subjected to a sufficiently high pressure in order to assure a sufficiently effective cleansing in the downstream areas. However, this disadvantage is outweighed by the advantage of the proposed method, wherein the same cleansing agent stream cleansers all areas.

A further advantageous embodiment of the proposed method permits installation of the double seat valve (hereinafter also abbreviated as valve) independently of position, whereby the cleansing agent stream can be obtained from either valve housing part without encountering the above disadvantage. This is accomplished by branching the cleansing agent stream behind the rod guide passage at the branch off point into partial streams R_i which cleanse the relevant areas of the double seat valve, which can be arranged side by side or one behind the other. The total stream R and its partial streams R_i are thereby conducted as forced currents into the areas to be cleansed. Thereby it can always be assured that the respective critical rod guide passage is an end point for a partial stream, not an intermediate station.

In most applications, it is sufficient (as one further development of the

AUSTRALIAN PATENT OFFICE

the cleansing agent stream behind the rod guide passage at the branch off point into partial streams R_i which cleanse the relevant areas of the double seat valve, which can be arranged side by side or one behind the other. The total stream R and its partial streams R_i are thereby conducted as forced currents into the areas to be cleansed. Thereby it can always be assured that the respective critical rod guide passage is an end point for a partial stream, not an intermediate station.

In most applications, it is sufficient (as one further development of the proposed method provides) to split the total stream R into two partial streams, R_1 and R_2. One, R_1, cleanses the seat area which has been made accessible and the leakage hollow space, while the other, R_2 cleanses the other rod guide passage (C) or (A).

A defined adjustment and measurement of the partial stream amounts or the relationship of the partial streams to each other is possible. As a rule, several times the amount of cleansing agent is necessary for cleansing the accessible seat area and the leakage hollow space of the valve than for cleaning a rod guide passage. For this reason, adjusting the relationship between the these partial streams, for example the partial streams R_1 and R_2, with $R_1/R_2 > 1$, is indicated.

The proposed method may be applied to double seat valves with two slide type closing members and to double seat valves with a slide type closing member and a seat plate. In the latter closing member configuration, the seat plate remains on its seat area and the slide type closing member is moved from it by the partial stroke. The seat area of the seat plate is thus not cleansed in the course of applying the proposed procedure.

To the extent that the double seat valve is provided with two slide type closing members, the invention procedurally suggests two partial stroke variants. One variant is characterized by the closing members being moved by opposed partial strokes. The cleansing agent

AUSTRALIAN PATENT OFFICE

stream branches off at the rod guide passage where the partial stroke runs against the direction of the valve opening. In the other variant, the closing members are moved by partial strokes in the same direction. The cleanser stream branches off at the rod guide passage of that closing member where the partial stroke runs against the opening direction of the valve and which is dependently driven.

It is possible, using a suitable adjustment drive, to implement both forenamed partial stroke variants on the same valve arrangement. Hence it is now possible to guarantee the advantages attainable of the present invention to the full extent in every case on the same valve, regardless of whether the cleansing agent is available in one valve housing part or the other. For the case for example where the valve opens downward and the cleanser is available in the upper valve housing part, while the lower valve housing when necessary is loaded with product, provision of the cleansing agent stream over the upper rod guide passage is obtained by way of an opposed partial stroke movement. Where in the same valve cleanser is available in the lower valve housing part, the lower rod guide passage can be exposed by a partial stroke movement in the same direction against the opening direction of the valve, so that the cleanser stream can now be branched of from the lower valve housing part. The upper valve housing part can thereby at times be loaded with product. Both partial stroke variants allow a displacement of the closing member which at times is loaded with by product in the direction of the product conducting valve housing part. The seat area formerly loaded with product which is covered by the closing member is made available for the cleansing agent stream out of the leakage hollow space.

The valve arrangement for implementing the procedure initially proposed finds its most advantageous embodiment when both closing members are constructed as slides and

AUSTRALIAN PATENT OFFICE

principle likewise possible by introducing cleanser from outside and under relatively high pressure, which is conducive to an intensive cleaning. It is prohibited for safety reasons. Already at the design level, a seal which on the one hand stands under product load must be prevented from being subject to cleanser under pressure on the other.

In order to ensure a loading with cleansing agent of the rod seal which is possibly loaded with product, introducing the latter to the immediate seal area under as little pressure as possible has been suggested. It is self evident that a cleansing agent subject to pressure conditions of this type cannot be used for further cleaning purposes in a double seat valve. The preconditions for a cleansing of the relevant areas of a double seat valve with minimal, economical and last but not least environmentally friendly use of cleansing and disinfecting agents fail from the start with cleansing technological solutions of this sort. These preconditions consist in the fact the cleansing agent stream cleans all cleansing technologically relevant areas of the double seat valve.

The same advantages are attainable for double seat valves in which the cleanser must be introduced from the surroundings of the valve (since in

AUSTRALIAN PATENT OFFICE

can be measured under controlled conditions at the point of origin or at another point in the successive path of the stream according to the type of branching. In those valve arrangements in which the cleanser stream is conducted through the valve via a forced flow and subsequently in cleansing the rod guides in branched off into partial streams and the branching off point, the partial stream designated to cleanse the other rod guide passage passes through a throttle gap before reaching this unexposed rod guide passage. This measure assures that no impermissible pressure buildup occurs because of the cleanser on the associated rod seal, which occasionally is loaded by product. The partial stream allotted to the seat areas made accessible and the adjacent leakage hollow space is not critical with regard to pressure buildup, because it enters this area which is associated with the valve surroundings through an aperture of large cross section almost as a free spray stream.

In order to keep the necessary operating forces of the proposed valve arrangements as small as possible, the closing members in the area of their respective associated valve housing parts may be so constructed that the compressive forces exerted by the fluid in the valve housing parts on the closing members are largely compensated. For this purpose, the diameter of the first operating rod is increased to the valve seat diameter in the form of a pressure compensation piston in the area of its guide passage (A).

If the diameter of the pipe associated with the second operating rod is increased in its overall extension area between the closing member and its guide to approach that of the valve seat (as a further advantageous refinement provides), there first result suitable conditions for the formation of a cleanser drizzle film on the inner wall of the pipe in case the cleanser stream, without further branching, successively flows through the cleansing

PATENT OFFICE

technologically relevant areas of the valve. Second, there result conceivably suitable conditions with respect to avoiding a pressure buildup in the leakage hollow space, for example, as a consequence of defective seat seals or as a result of an unplanned or undesired opening of the upper closing member.

In order that the cleanser stream for the above named partial stroke variants can be realized with the same development of the proposed valve arrangement, a remotely controlled connecting opening for draining partial stream R_2 of the cleanser stream is provided in the area above the first rod seal or below the second rod seal.

In case partial strokes in the opposite as well as in the same direction are to be implemented in the proposed valve arrangements, the individual partial strokes are subjected to particular measuring criteria, as a further advantageous refinement of the valve arrangement provides in accord with the invention. Exposing the respective rod guide passage necessarily requires on the one hand a particular minimum stroke. On the other hand, this minimum stroke may not be attained if this rod guide passage should not be exposed. The stroke direction in same direction partial stroke motion nonetheless agrees with the direction of the partial stroke for exposing the guide passage because of the necessary exposure of the seat area. In these cases, the respective closing member implements the partial strokes which run indeed in the same direction but are of different magnitude. Since the axial extension of the common seat area of both closing members is nonetheless restricted, and in a partial stroke movement in the same direction the closing members necessarily have a small clearance of the respective end of the seat surface, an advantageous refinement of the valve arrangement provides that the closing members, in relation to their resting position in the closed position of the valve arrangement, are arranged axially displaced in the direction of the second closing member. The

AUSTRALIAN PATENT OFFICE

partial stroke variant in the same direction is not critical with regard to maintaining necessary clearances from the edges of the seat surfaces, since the closing member adjacent to the edge of the seat surface must accordingly execute a basically greater partial stroke in the same direction partial stroke variant.

An application of the valve arrangement for implementing the proposed method is presented in the illustration and is described in the following material. The illustrations depict:

Fig. 1, 1a respectively, a cross section through a valve arrangement according to the invention in its closed position, whereby the seal arrangements are designed differently in the first closing member;

Fig. 2, 2a the valve arrangement according to Figure 1 or 1a in their open position;

Fig. 3 the valve arrangement according to Figure 1 in its cleaning position with an exposure of the upper rod guide passage (A) and with a branched cleanser stream (same direction partial stroke movement);

Fig. 3a the cleansing position of the valve arrangement according to Figure 3 with a modified design of the branching point for the cleansing agent in the rod guide passage region (A);

Fig. 4 the valve arrangement according to Figure 1 in its cleaning position with exposure of the lower rod guide passage (C) and with a branched cleanser stream (same direction partial stroke movement and

Fig. 5 a schematic representation of the partial strokes likewise realizable in the same or opposite direction in the valve arrangement according to Figure 1.

AUSTRALIAN PATENT OFFICE

A double seat valve (Fig. 1, 1a) whose valve housing 1 is formed by valve housing parts 1a and 1b, has a seat ring 2 passing through these valve housing parts in their connecting area. In the latter, within a cylindrical seat surface 2a, are two slide type closing members 3 and 4 are arranged glidingly displaceable, and over seat seals 13 or 14, radially sealingly displaceable, and over seal 13a or 13, even axially sealingly displaceable toward each other. The lower closing member 4 is extends into a pipe 4a whose diameter is enlarged along its entire extension area between closing member 4 and its guide passage (C) through the lower valve housing part 1b to approximate the valve seat diameter. Pipe 4a forms on the one hand the connection between a leakage hollow space 6 formed between closing members 3 and 4 in the closed as well as the open position of the valve, and the valve surroundings. On the other hand, it forms the pressure compensation cylinder for compensating compressive forces exerted by the fluid in valve housing part 1b on closing member 4. Pipe 4a is sealed off in valve housing part 1b by a second rod seal 7. It is additionally radially conducted via a guiding ring 11 into a tubular insert in valve housing part 1b which is not described in greater detail. Closing member 4 is connected over pipe 4 a and a connecting part 4c with a second operating rod 4b conveyed to a control arrangement D which is placed above the valve, but is not shown in the present case. The second operating rod 4b is coaxially enclosed by pipe 4a, whereby within connecting part 4c at least a second supply bore 4f is disposed, which creates a connection between a second chamber 10 below the second rod seal 7 and a bore 4d disposed in axially inside the second operating rod.

The first closing member 3 is equipped with a first operating rod 3a constructed as a hollow rod mounted on the second operating rod 4b of the second closing member 4, which widens in its guide passage area (A) through the

AUSTRALIAN PATENT OFFICE

cases, the respective closing member implements the partial strokes which run indeed in the same direction but are of different magnitude. Since the axial extension of the common seat area of both closing members is nonetheless restricted, and in a partial stroke movement in the same direction the closing members necessarily have a small clearance of the respective end of the seat surface, an advantageous refinement of the valve arrangement provides that the closing members, in relation to their resting position in the closed position of the valve arrangement, are arranged axially displaced in the direction of the second closing member. The partial stroke variant in the same direction is not critical with regard to maintaining necessary clearances from the edges of the seat surfaces, since the closing member adjacent to the edge of the seat surface must accordingly execute a basically greater partial stroke in the same direction partial stroke variant.

Brief Description of the Drawings

The present invention will now be described by way of example with reference to the accompanying drawings, wherein:

Fig. 1, 1a respectively, a cross section through a valve arrangement in its closed position, whereby the seal arrangements are designed differently in the first closing member;

Fig. 2, 2a the valve arrangement according to Figure 1 or 1a in their open position;

Fig. 3 the valve arrangement according to Figure 1 in its cleaning position with an exposure of the upper rod guide passage (A) and with a branched cleanser stream (same direction partial stroke movement);

Fig. 3a the cleansing position of the valve arrangement according to Figure 3 with a modified design of the branching point for the cleansing agent in the rod guide passage region (A);

AUSTRALIAN PATENT OFFICE

Fig. 4 the valve arrangement according to Figure 1 in its cleaning position with exposure of the lower rod guide passage (C) and with a branched cleanser stream (same direction partial stroke movement);

Fig. 5 a schematic representation of the partial strokes likewise realizable in the same or opposite direction in the valve arrangement according to Figure 1.

Fig. 6 a cross section through a valve arrangement in the area of the rod guide passage (C) facing away from the control arrangements, whereby the cleanser source is provided in the surroundings of the double seat valve; and

Fig. 7 a cross section through a valve arrangement according to Figure 6 in the area of the rod guide passage (A) facing toward the control arrangements.

Detailed Description

A double seat valve (Fig. 1, 1a) whose valve housing 1 is formed by valve housing parts 1a and 1b, has a seat ring 2 passing through these valve housing parts in their connecting area. In the latter, within a cylindrical seat surface 2a, are two slide type closing members 3 and 4 are arranged glidingly displaceable, and over seat seals 13 or 14, radially sealingly displaceable, and over seal 13a or 13, even axially sealingly displaceable toward each other. The lower closing member 4 extends into a pipe 4a whose diameter is enlarged along its entire extension area between closing member 4 and its guide passage (C) through the lower valve housing part 1b to approximate the valve seat diameter. Pipe 4a forms on the one hand the connection between a leakage holiow space 6 formed between closing members 3 and 4 in the closed as well as the open position of the valve, and the valve surroundings. On the other hand, it forms the pressure

AUSTRALIAN PATENT OFFICE

part 1b. This embodiment guarantees an almost leakage-free operation of the valve arrangement, as the space between closing members 3,4 when brought together on the one hand and seat surface 2a on the other is minimized. Outlet orifices 17 and 22 are opened in the present case, since the remotely controlled closing arrangement is not actuated. A closure of this outlet orifice would nonetheless be equally possible in this valve position.

It is apparent from Figures 3 and 3a that in a displacement of the first closing member 3 by means of its operating rod 3a for partial stroke T_{11} in the direction of valve housing part 1a that the sealing point of the pressure compensation piston which acts in concert with the first rod seal 5 in the closed position of the valve is likewise displaced for this partial stroke in the direction of first chamber 8. At the same time, the second closing member 4 is displaced by its operating rod 4b by the opposed partial stroke T_{21}. The pressure compensation piston 3b is necessarily so constructed in the region of first rod seal 5 that the guide passage (A) to the first chamber 8 is exposed with partial stroke T_{11}, so that a cleanser stream R branches off from the valve housing part and is guided through the exposed guide passage (A) and into adjacent first chamber 8. From thence, the stream proceeds to ring slot 9 via connection bore 3c. Here it branches at branching point V into partial streams R_1 and R_2. Partial stream R_1 proceeds via the extending ring slot 9 into leakage hollow space 6 and the adjacent seat area 2a, which has been made accessible. Both areas are designated (B). Partial stream R_2 flows over first supply bore 4e into bore 4d, from there over the second supply bore 4f and the second throttle gap 16 of second chamber 10 below the second rod seal 7. Pipe 4a and the first guide ring 11 can be so dimensioned to each other that the passage of a relatively small partial stream r_2 into the valve surroundings is possible, while the remaining, basically

AUSTRALIAN PATENT OFFICE

larger component R_2* flows off via the second outlet orifice 22. In the area of leakage hollow space 6, partial stream R_1 is guided to the adjacent seat surface 2a, made accessible for same direction partial strokes T_{11} and T_{21}, passing from the free seat surface of closing members 3,4 with their equilibrium clearance a. After the first area relevant for cleansing technology, guide passage (A), is subjected to cleansing, the second and third areas, (B) and (C), are thereby subjected to such in a quasi parallel fashion. Outlet orifice 17 is closed by closing arrangement 21, so that the cleanser stream obtained at the guide passage (A) is compelled to enter into cleansing technologically relevant areas (B) and (C).

In case cleansing of the labyrinthine first chamber 8 which branches to outlet orifice 17 is indicated, a relatively small partial stream r can be admitted via outlet orifice 17. This partial stream must be taken into account in apportioning total stream R (increased to R*).

The first recess 3e in pressure compensation piston 3b is so positioned in relation to the third rod seal 18 that an unimpeded passage of cleansing agent stream R from first chamber 8 into ring slot 9 is possible. The first throttle gap 15 is passed around almost as in a bypass, so that cleansing stream R remains unthrottled at this point. By way of contrast, second throttle gap 16 fulfills its throttle role and impedes partial stream R_2 from causing any impermissible pressure buildup on second rod seal 7, which may be loaded with product.

The alternative cleansing method, in which the cleansing stream R is branched off at guide passage C of pipe 4a through partial stroke T_{22} of the second closing member 4 by means of its operating rod 4b in the direction of the first valve housing part from lower valve housing part 1b is presented in figure 4. At the same time, there follows a same direction displacement of first closing member 3 by its operating rod 3a for

AUSTRALIAN PATENT OFFICE

partial stroke T_{12}.

It is advantageous to dimension pipe 4a in the region of the first guide ring 11 so that there a relatively small partial stream r_1 of cleansing agent can emerge into the valve arrangement surroundings. Depending upon the size of this partial stream, a cleanser stream R* is branched off at guide passage C of pipe 4a in the second valve housing part 1b, assuring the necessary cleanser stream R for the other two areas A and B. The stream arrives unthrottled via second recess 4g in the region of second rod seal 7 at second supply bore 4f and from thence in bore 4d to enter ring slot 9 from her via first supply bore 4e. A branching into partial streams R_1 and R_2 at branching point V in the connection bore 3c region. Partial stream R_1 flows into leakage hollow space 6 and adjacent exposed seat area 2a, as previously depicted in Figure 3. Partial stream R_2 arrives in first chamber 8 via first throttle gap 15, the chamber being sealed off from the annular space above pressure compensation piston 3b by third rod seal 18. Outlet orifice 17 is open, so that cleansing agent stream R_2 can emerge in the valve arrangement surroundings out of cleansing technologically critical area (A) above first rod seal 5. Since partial stream R_2 necessarily must pass first throttle gap 15, an impermissible pressure buildup in cleanser stream R_2 above first rod seal 5, if necessary loaded by product, is safely avoided.

Components and designations indicated in Figures 2-4, but not further explained in their associated description, or components indeed mentioned in the description, but not drawn in the Figures are discussed in detail in the descriptions for Figures 1 and 1a. To the extent that the interior space of valve housing parts 1a,1b is referred to by P, this means that product can on occasion be present there during the cleaning procedure.

To the extent that the alternative cleansing

AUSTRALIAN PATENT OFFICE

procedures should be applied optionally, as needed, by exposure of guide passage (A) or guide passage (C), outlet orifices 17 and 22 may be opened and closed by remote control for discharging partial stream R_2.

Partial strokes necessary for the alternative cleansing procedures are depicted in Figure 5. The axial extension of seat surface 2a is referred to as S and the opening direction of the valve arrangement as H. The left part of the illustration shows the first and second seat seal 13 or 14 in their equilibrium position, that is, in the closed position of the valve arrangement, whereby equilibrium clearance a is provided. It is clear that seals 13, 14 and thereby closing members 3,4 are arranged axially displaced in the direction of the second closing member 4 within seat surface 2a. In the middle illustration, seals 13, 14 assume their respective outer end positions when they are displaced for opposed partial strokes T_{11} or T_{21}. First seat seal 13 has thereby a marginal clearance b_1 to the upper end of seat surface 2a, while second seat seal 14 has a marginal clearance b_2 to the lower end of seat surface 2a. In the right hand illustration, closing members 13, 14 are displaced from their equilibrium position for same direction partial strokes T_{12} or T_{22}.

It is further evident that partial strokes T_{11} and T_{21} or T_{12} and T_{22} are different. This necessarily results from the fact that guide passage (A) must be opened by partial stroke T_{11}, while partial stroke T_{21} merely causes the exposure of the seat surface of second closing member 4, which can be loaded by product. Partial stroke T_{11} is hence larger than partial stroke T_{21} (on this, cf. also Figure 3).

The opening of guide passage (C) of pipe 4a takes place in same direction partial stroke movement (compare the right hand illustration in Figure 5 and Figure 4) by partial stroke T_{22}, while T_{12} again merely exposes the seat surface of first closing member 3. For this reason,

AUSTRALIAN PATENT C

partial stroke T_{22} is here designed to be greater than partial stroke T_{12}, whereby it is assured, however, that after completion of same direction partial strokes T_{12} and T_{22}, the second closing member 4 is not in the very position which first closing member 3 previously occupied in its closed position before it completed partial stroke T_{12}. To ensure satisfactory cleaning of the first closing member 3, second closing member 4 should not yet have reached the closed position of first closing member 3 following completion of partial stroke T_{22}. A sufficient safety clearance a* is provided.

The previous exposition necessarily leads to the conclusion that closing members 3, 4 in their closed position cannot be grouped around the axis of symmetry which is vertically oriented toward the rotation axis of seat ring 2. Rather, they are positioned asymmetrically in seat ring 2.

The proposed method and the valve arrangements presented as suggestions for its implementation now in fact make it for the first time possible to subject all relevant areas of a double seat valve to cleansing with a single cleansing agent stream successively, or by branching the stream behind the exposed guide passage, also parallel or in series, with minimal, economical and environmentally friendly sue of cleansing and/or disinfecting agents.

The procedures in accord with the invention are indeed not solely applicable to the concretely proposed valve arrangements above. They are also valid for the majority of the closing member configurations, opening directions and partial stroke variants which have become known in the publications mentioned above. They are, as already explained, applicable to double seat valves which are equipped on the one hand with a seat plate and with a slide type closing member on the other. Only those arrangements are to be excluded in view of the requirement for leakage free operation in which the slide

AUSTRALIAN PATENT OFFICE

type closing member executes a "collection movement" in the direction of the seat plate in the course of the opening movement of the double seat valve (on this see DE 31 08 778 C29). With respect to the control arrangements for the operating rods which guarantee the proposed methods, the only requirement is that these must permit the opening movement of the double seat valve with the opening stroke H on the one hand, and that on the other, they must permit the opposite direction partial strokes T_{11}, T_{21} or the same direction partial strokes T_{12}, T_{21} in realizing alternative cleaning procedures on the same valve arrangement.

Cleansing agent is not available in every case which occurs in practice in at least one of the valve housing parts, so that the above proposed procedure cannot be applied. In addition, the method initially suggested is not applicable when product is present in both valve housing parts. Nor is it applicable if a cleansing of the relevant areas of the double seat valve is necessary without restriction in its closed position as well as in restricted form in its open position, namely a cleansing of all areas with exception of the exposed seat areas.

It is known from the initially cited EP-A-0 208 126 that when previously mentioned operating conditions are present, cleansing of the seat surface of the slide type closing member which is if necessary loaded with product takes place by the introduction of cleanser from outside of the double seat valve over the leakage hollow space. A cleansing of the rod guide passages in principle likewise possible by introducing cleanser from outside and under relatively high pressure, which is conducive to an intensive cleaning. It is prohibited for safety reasons. Already at the design level, a seal which on the one hand stands under product load must be prevented from being subject to cleanser under pressure on the other.

In order to ensure a loading with cleansing agent of the rod seal which is possibly loaded with product,

AUSTRALIAN PATENT OFFICE

introducing the latter to the immediate seal area under as little pressure as possible has been suggested. It is self evident that a cleansing agent subject to pressure conditions of this type cannot be used for further cleaning purposes in a double seat valve. The preconditions for a cleansing of the relevant areas of a double seat valve with minimal, economical and last but not least environmentally friendly use of cleansing and disinfecting agents fail from the start with cleansing technological solutions of this sort. These preconditions consist in the fact the cleansing agent stream cleans all cleansing technologically relevant areas of the double seat valve.

In view of the disadvantages just presented and the state of the art requirements, it is also the goal of the present invention to create a procedure of the type named at the outset which in providing cleanser from the surroundings of the double seat valve solves without restriction the relevant problem of assuring cleansing of the relevant areas of a double seat valve with minimal, economical and lastly (but not least) environmentally friendly use of cleansing and/or disinfecting agent.

The problem is solved by the features under the heading of subclaim 17. Advantageous refinements of the method are the object of claims 18-20. A valve arrangement for implementing the proposed procedure is achieved by the use of features under the heading of claim 20.

The same advantages are attainable for double seat valves in which the cleanser must be introduced from the surroundings of the valve (since in the valve housing no cleanser is available, or operations require the presence of product) with the procedure now proposed as for those double seat valves where the "valve housing" is available as a source of cleansing agent through the partial stroke of the closing member and the associated exposure of a rod guide. The two alternatively proposed procedures

AUSTRALIAN PATENT OFFICE

differ solely in terms of the position or type of cleanser source. In the method now proposed, the cleanser stream is introduced from outside the double seat valve through an introduction point (E), where it cleanses the rod guide (A or C) on the valve housing side of the introduction point and at least one of the following areas: The other rod guide passage (C or A), the leakage hollow space, and the seat area, or the seat area which has been made accessible.

Since a partial stroke of at least one closing member can be dispensed with because there is no longer a need to expose the rod guidance to the valve housing part, the drive of a double seat valve cleansed in this manner is particularly simple. Indeed the procedural partial stroke variants proposed above may be used without restriction in connection with the cleansing procedure now proposed as well. The same applies for the proposed basic structure of the valve arrangement and advantageous refinements of it.

That the procedure now proposed can use the advantages of the procedure suggested at the beginning almost without restriction results in the final analysis from the fact that it is based upon an fruitful procedural variant of the latter. Among other things, it consists of branching the cleanser stream obtained in the valve or now introduced from the valve surroundings at a branching point (V) into partial streams R_1. A throttle gap is provided between the branching point and the neighboring rod seal. A partial stream (r) is throttled in the throttle gap. It cleanses the rod seal almost without pressure and is subsequently conducted to the valve surrounding. The other partial stream (R), or the partial streams (R_1, R_2) continue unthrottled from the branching point and clean the other relevant areas of the valve, to be sure basically according to one of the advantageous refinements of the procedure proposed initially.

A refinement of the valve arrangement of almost the

AUSTRALIAN PATENT OFFICE

same construction for implementing the method now in proposed in the area of the rod guide passage works through the use of a similarly constructed insert between the housing and the pressure compensation piston or pipe. This insert forms on the one hand the necessary throttle gap with the pressure compensation piston or the pipe, and includes on the other a drain hole for draining the partial stream (r) from a chamber adjacent to the rod seal in part formed by the insert into the valve surroundings.

An application of the valve arrangement for implementation of the method now proposed is presented in Figures 6 and 7 and is briefly explained in the following material.

The illustrations depict:

Figure 6 a cross section through a valve arrangement according to the invention in the area of the rod guide passage (C) facing away from the control arrangements, whereby the cleanser source is provided in the surroundings of the double seat valve, and

Figure 7 a cross section through a valve arrangement according to Figure 6 in the area of the rod guide passage (A) facing toward the control arrangements.

It is not necessary to go into the basic construction of the valve arrangement in Figures 6 and 7, as they have been sufficiently explained in figures 1-4. Only particularities in the rod guide passage area need to be discussed.

An insert 24 is placed between pipe 4a and a housing which is not further described, which forms with pipe 4a the throttle gap 16 and contains a discharge bore 24b for draining partial stream (r) out of a chamber 24b adjacent to rod seal 7 and partially formed by insert 24 into the valve surroundings (Fig. 6). A similarly constructed arrangement is found in Figure 7. Throttle gap 15 is here

AUSTRALIAN PATENT OFFICE

formed between insert 24 and pressure compensation piston 3b.

A first flow path guide 25 is placed below insert 24 (Fig. 6) which brings the cleansing agent (R+r) introduced via an introduction point (E) to the region of the lower end of pipe 4a, diverts it, and subsequently cleanses a part of the jacket surface of pipe 4a. The cleanser stream (R+r) branches into partial streams (R) and (r) at the branching point (V). Partial stream (r) is subjected to throttling in throttle gap 16 and arrives almost pressureless in neighboring rod seal 7 to pass via discharge bore 24a into the valve surroundings. Partial stream (R) flows unthrottled over supply bore 4f to other relevant areas of the valve in order to be subjected to further treatment in accord with the proposed method. A guide and wiper part 27 impedes the introduction of crude contamination form the valve surroundings into the valve guide passage region and serves, if necessary, for guiding pipe 4a.

The cleansing agent stream (R+r) introduced via the introduction point (E) in the upper rod guide passage area (A) from the valve surroundings branches at branching point (V) into partial streams (R_1, R_2) and into partial stream (R), whereby the last mentioned already takes the basic course depicted in Figure 6, in this case to rod seal 5 and from there to the valve surroundings. A second flow guidance part 26 serves to separate and convey unthrottled partial streams (R_1 and R_2). A first and a second range spacer 26a or 26b provide for unequivocally specific passage cross sections and sufficiently defined current and pressure formation in the gaps on both sides of the second flow guide part. Partial stream R_1 arrives in ring slot 9 via connection bore 3c. Partial stream R_2 flows through a second connection bore 3f and the first supply bore 4e to bore 4d to clean the other rod guide passage (C) there.

The introduction and distribution system for the

cleanser stream introduced from the valve surroundings depicted in Figures 6 and 7 is not dependent upon the manner in which this cleanser stream is further processed in the remaining course through the double seat valve. In the further course a number of modifications are possible. A operation of the areas relevant for cleaning technology purely in series is possible, as a purely parallel operation, or a mixed in series and parallel operation.

AUSTRALIAN PATENT OFFICE

The claims defining the invention are as follows:

1. A process for cleaning a double seat valve equipped with first and second serially effecting closure elements controllable by means of first and second rods, said first and second closure elements enclosing a leakage cavity between them, said method comprising the steps of:

performing a partial stroke with at least one said closure element, said partial stroke making a substantial part of a seat area assigned to said at least one closure element accessible to a detergent stream, said partial stroke being performed while maintaining the sealing at said seat area, and with said first rod leading through a first passageway from a first assigned section of the valve casing, and said second rod leading through a second passageway from a second assigned section of the valve casing, wherein said partial stroke also clears one of said first and second passageways such that said detergent stream is branched off through said cleared passageway out of said first or second assigned section of the valve casing, cleaning said cleared first or second passageway and at least one of the following sections:

- the other said passageway;
- said leakage cavity; and
- said accessible seat area.

2. A process according to claim 1, wherein said detergent stream branched off from said first or second assigned section of the valve casing cleans one of said first or second passageways at the branching off point and, without further branching off, at least one of the following sections:

- said accessible seat area;
- said leakage cavity; and
- the other said passageway.

3. A process according to claim 1, wherein after the cleaning of one of said first or second passageways, said detergent stream is divided into subsidiary streams cleaning the areas of the double seat valve that are connected in parallel or in parallel and in series.

4. A process according to claim 3, wherein the detergent stream divides into first and second subsidiary streams, said first subsidiary stream cleaning:

- said accessible seat area; and
- said leakage cavity;

and the second subsidiary stream cleaning

- the other said passageway.

5. A process according to any one of claims 1 to 4, wherein both said closure elements are designed as slides, and wherein said closure elements are shifted for opposite direction partial strokes, with said detergent stream being branched off at

AUSTRALIAN PATENT OFFICE

each rod passageway of the closure element that has a partial stroke counter to the opening movement of the valve.

6. A process according to any one of claims 1 to 4, wherein both said closure elements are designed as slides, one said closure element being driven independently from the other said closure element, said other closure element being driven dependently, and wherein said closure elements are shifted for same direction partial strokes, with the detergent stream being branched off at the rod passageway of the closure element that has a partial stroke counter to the opening movement of the valve and that is driven dependently.

7. A process according to any one of claims 1 to 4, wherein one said closure element is designed as a slide and the other closure element is designed as a seat plate, wherein the closure element designed as a slide is driven independently and is placed at a distance equal to the partial stroke from the seat plate remaining on its seat area.

8. A process for cleaning a double seat valve equipped with first and second serially effecting closure elements controllable by means of first and second rods, said closure elements enclosing a leakage cavity between them, said method comprising the steps of:

performing a partial stroke with at least one said closure element, said partial stroke making a substantial part of the seat area assigned to said at least one closure element accessible to a detergent stream supplied from the exterior of said valve, said partial stroke being performed while maintaining the sealing at the seat area, and with the first rod of said first closure element leading through a first passageway from a first assigned section of the valve casing, and the second rod of said second closure element leading through a second passageway from a second assigned section of the valve casing, wherein said detergent stream is introduced into said double seat valve at an introduction point where it cleans one of said passageways at a side of the introduction point towards the valve casing and at least one of following sections:

- the other said passageway;
- said leakage cavity; and
- said accessible or cleared seat area.

9. A process according to claim 8, wherein said detergent stream is divided after said introduction point into subsidiary streams, of which one subsidiary stream is throttled to perform a substantially pressure-free cleaning of an adjacent rod sealing and is afterwards expelled to the exterior of said valve, and wherein another subsidiary stream is branched off from said first or second assigned section of the valve casing, cleaning one of said first or second passageways and, without further branching off, at least one of the following sections:

AUSTRALIAN PATENT OFFICE

- said accessible seat area;
- said leakage cavity; and
- said other passageway.

10. A process according to claim 8, wherein said detergent stream is divided after said introduction point into subsidiary streams, of which one subsidiary stream is throttled to perform a substantially pressure-free cleaning of an adjacent rod sealing and is afterwards expelled to the exterior of said valve, and wherein the remaining subsidiary streams clean the areas of the double seat valve that are connected in parallel or in parallel and in series.

11. A process according to claim 10, wherein said detergent stream is divided after said introduction point into three subsidiary streams, of which one subsidiary stream is throttled to perform a substantially pressure-free cleaning of an adjacent rod sealing and is afterwards expelled to the exterior of the valve, and wherein one of the two remaining subsidiary streams cleans:

- said accessible seat area;
- said leakage cavity;

and wherein the other of the two remaining subsidiary streams cleans:

- said other passageway.

12. A process according to any one of claims 8-11, wherein said two closure elements are designed as slides and wherein said closure elements are shifted for opposite direction partial strokes, with the detergent stream being branched off at each rod passageway of the closure element that has a partial stroke counter to the opening movement of the valve.

13. A process according to any one of claims 8-11, wherein said two closure elements are designed as slides, one said closure element being driven independently from the other said closure element, said other closure element being driven dependently, wherein said closure elements are shifted for same direction partial strokes with the detergent stream being branched off at the rod passageway of the closure element that has a partial stroke counter to the opening movement of the valve and that is driven dependently.

14. A process according to any one of claims 8-13, wherein one said closure element is designed as a slide and the other said closure element is designed as a seat plate, and wherein the closure element designed as a slide is driven independently and is placed at a distance equal to said partial stroke from the seat plate remaining on its seat area.

15. The process defined in any one of the preceding claims, wherein said valve is a low-leakage or non-leaking double seat valve.

AUSTRALIAN PATENT OFFICE

16. A valve device adapted to carry out the process of any one of claims 1, 2 or 5, said device comprising first and second closure elements enclosing a leakage cavity between them, and first and second rods leading from a valve casing towards one side of said valve, said first and second rods connected with control devices, wherein:

said first closure element is driven independently from said second closure element by means of said first rod, said first rod leading through a first passageway from a first assigned section of the valve casing;

said second closure element is driven by said second rod and connected with said second rod by means of a pipe, said pipe coaxially surrounding said second rod and leading through a second passage from a second assigned section of the valve casing, and wherein:

said first passageway comprises a connection to said leakage cavity through an annular gap between said first rod and said second rod, said second rod being arranged coaxially within said first rod, and a connection to said second passageway through the interior of said pipe and through openings in a wall of said pipe, said valve device being adapted such that a partial stroke of said first closure element directed opposite to the opening movement of the valve clears said first passageway, allowing a detergent stream to flow.

17. A valve device adapted to carry out the process of claim 1 or any one of claims 3 to 6, said valve device comprising first and second closure elements enclosing a leakage cavity between them, and first and second rods leading from an assigned section of the valve casing towards one side of said valve, said rods connected with control devices, wherein:

said first closure element is driven by means of said first rod, said first rod leading through a first passageway in a first assigned section of the valve casing;

said second closure element is driven by means of said second rod and connected with said second rod by means of a pipe, said pipe coaxially surrounding said second rod and leading through a second passageway from the second assigned section of the valve casing, said valve device further comprising;

a drilling in said second rod provided along the length thereof, one side of said drilling connected with said first passageway and another side of said drilling connected with said second passageway, wherein the connection path between said drilling and said first passageway comprises a branching off point from which another connection to an annular gap formed between the first rod and the second rod is provided, said second rod being coaxially arranged within said first rod, said annular gap providing a connection to the leakage cavity, said valve device being adapted such that, at a partial stroke of said first closure element directed opposite to the opening movement of the valve, said first passageway, or at a partial stroke of said second closure element, said

AUSTRALIAN PATENT OFFICE

second passageway, is cleared, allowing a detergent stream that is divided into first and second subsidiary streams at said branching off point to flow.

18. A valve device according to claim 17, wherein the connection path between said first passageway and said branching off point in the closed position of the valve or in valve position for clearing said second passageway comprises a first reduction gap, and wherein the connection path between said second passageway and said drilling comprises a second reduction gap in the closed position of the valve or in the valve position for clearing said first passageway.

19. A valve device according to any one of claims 16 to 18, wherein the diameter of said pipe is enlarged in its whole extension area between said second closure element and said second passageway to approximately the seat diameter of said valve.

20. A valve device according to any one of claims 16 to 19, wherein the diameter of said first rod in the area of said first passageway through said first assigned section of the valve casing is enlarged to the diameter of the valve seat in the form of a pressure balancing piston.

21. A valve device according to any one of claims 16 to 20, wherein a discharge opening for discharge of a second subsidiary stream of the detergent stream can be opened and closed by remote control above a first rod sealing or below a second rod sealing.

22. A valve device according to claim 20 to 21, wherein said first and second passageways are cleared by means of a group of first grooves in said first rod or in said pressure balancing piston, or by means of a group of second grooves in said pipe, each said group comprising cavities separated from each other, said cavities being aligned in the direction of or at a predetermined angle to a valve axis, said cavities being distributed over the diameter of said first rod, said pressure balancing piston, or said pipe.

23. A valve device according to any one of claims 16 to 22, wherein said closure elements are designed as slides able to perform partial strokes in opposite or same directions within an assigned seat area while maintaining their respective sealing in said assigned seat area, said device adapted such that a said partial stroke of said first closure element clears said first passageway of said first rod in said first assigned section of the valve casing, and a said partial stroke of said second closure element of substantially the same length and alignment as said first partial stroke of said first closure element alternatively clears said second passageway, and for same direction partial strokes, another said partial stroke of said first closure element is regulated in a way that said first passageway remains closed.

AUSTRALIAN PATENT OFFICE

24. A valve device according to claim 23, wherein, when said valve is closed, said closure elements are axially staggered relative to their resting position in the direction of said second closure element within the seat area such that for opposite direction partial strokes, wherein the partial stroke of said first closure element is longer than the partial stroke of said second closure element, said opposite direction partial strokes can be performed with a small safety distance to the respective ends of the seat area.

25. A valve device according to any one of claims 20 to 24, said device adapted to carry out the process of any one of claims 8 to 15, said device further comprising an insert in the areas of said first and second passageways between the valve casing and the pressure balancing piston or the pipe, respectively, wherein said insert forms a reduction gap with the pressure balancing piston or the pipe, and wherein said insert accommodates a discharge drilling for discharge of a subsidiary stream from a chamber adjacent to the rod sealing and partially formed by said insert into the exterior of the valve.

26. A process for cleaning a double seat valve, said process being substantially as hereinbefore described with reference to the accompanying drawings.

27. A valve device for carrying out the process according to any one of claims 1-15, said valve device being substantially as hereinbefore described with reference to the accompanying drawings.

DATED this Twelfth Day of September 1995
Otto Tuchenhagen GmbH & Co KG
Patent Attorneys for the Applicant
SPRUSON & FERGUSON

AUSTRALIAN PATENT OFFICE

19030/92

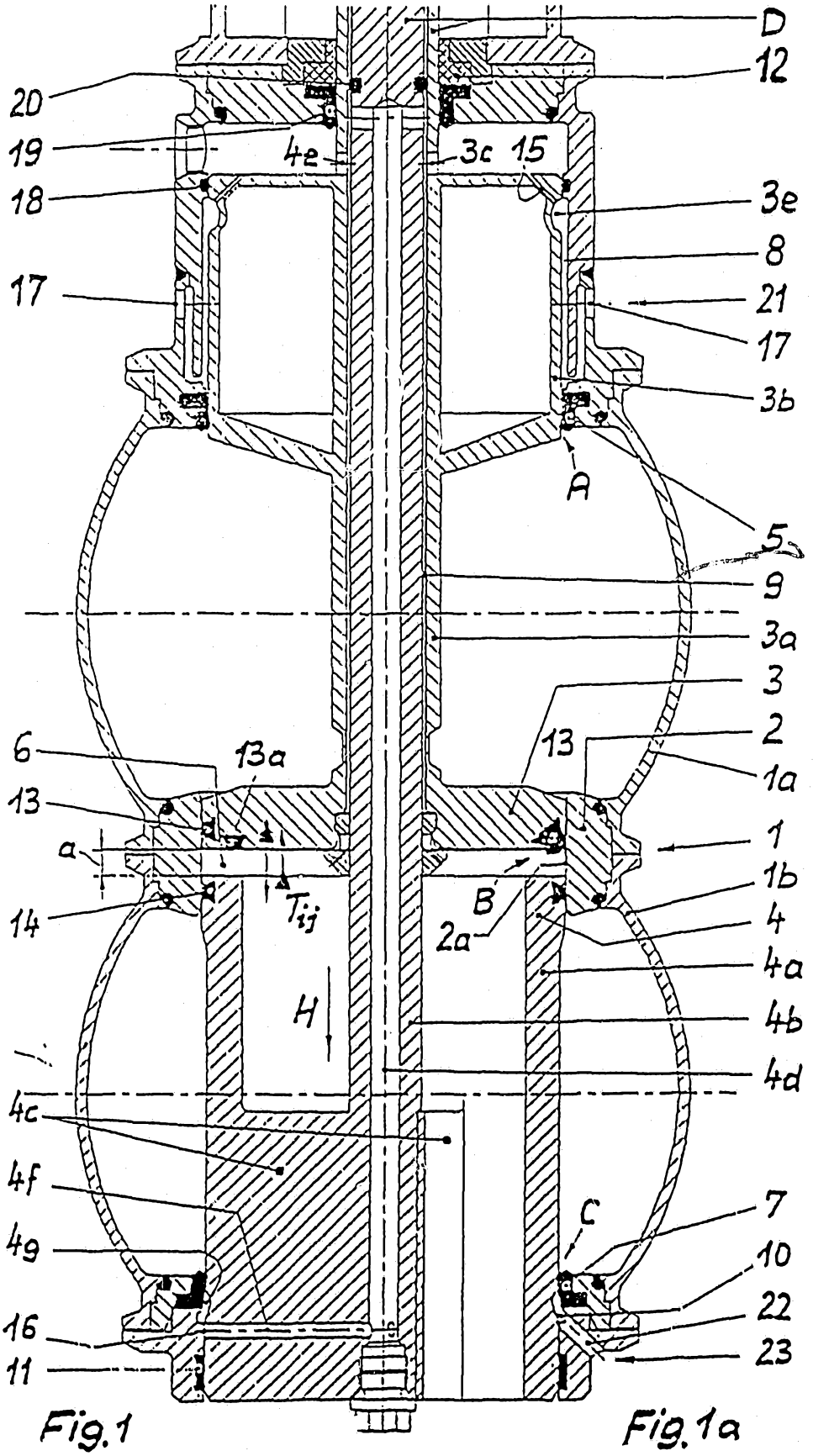

Fig.1

Fig.1a

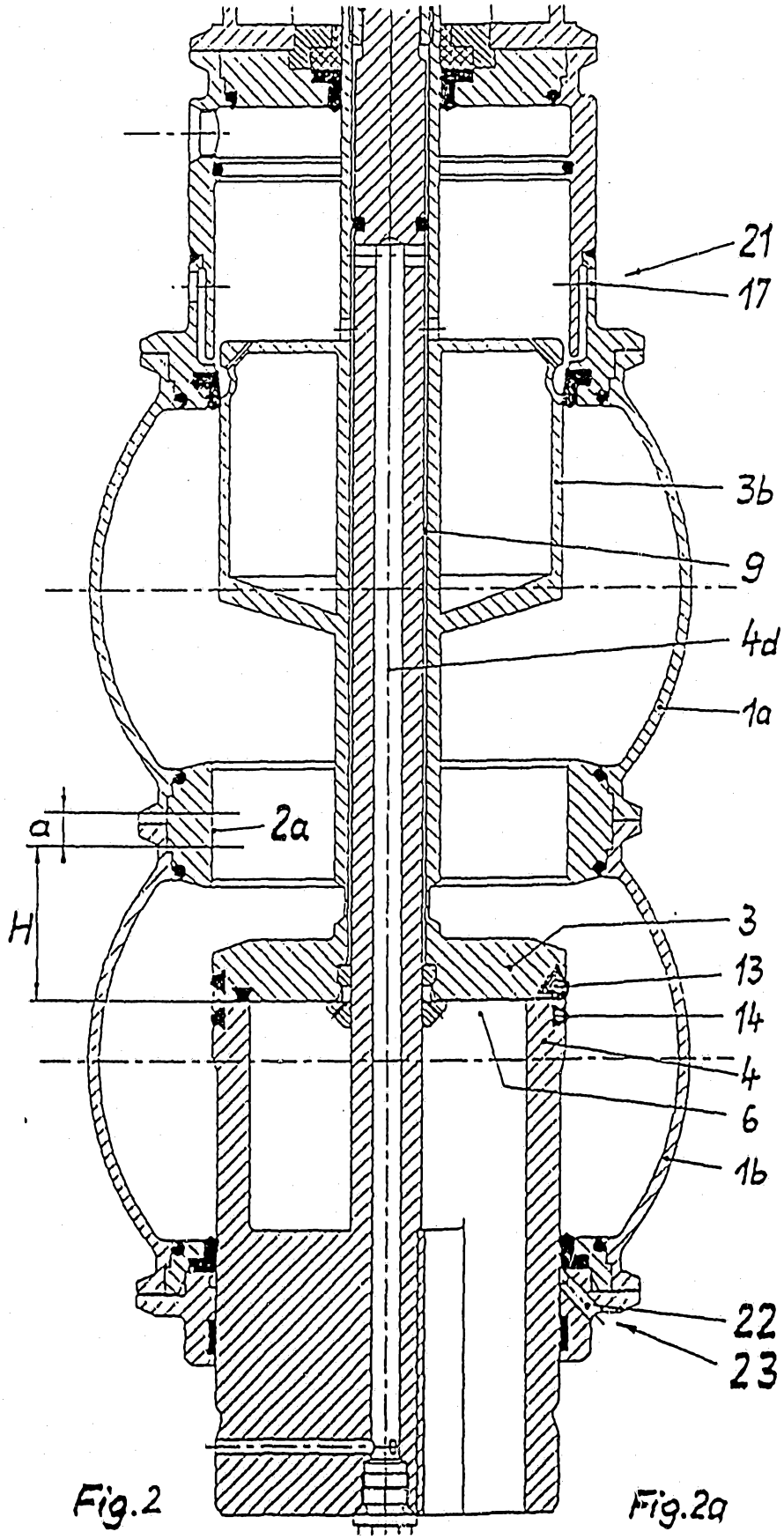

Fig.2

Fig.2a

19030/92

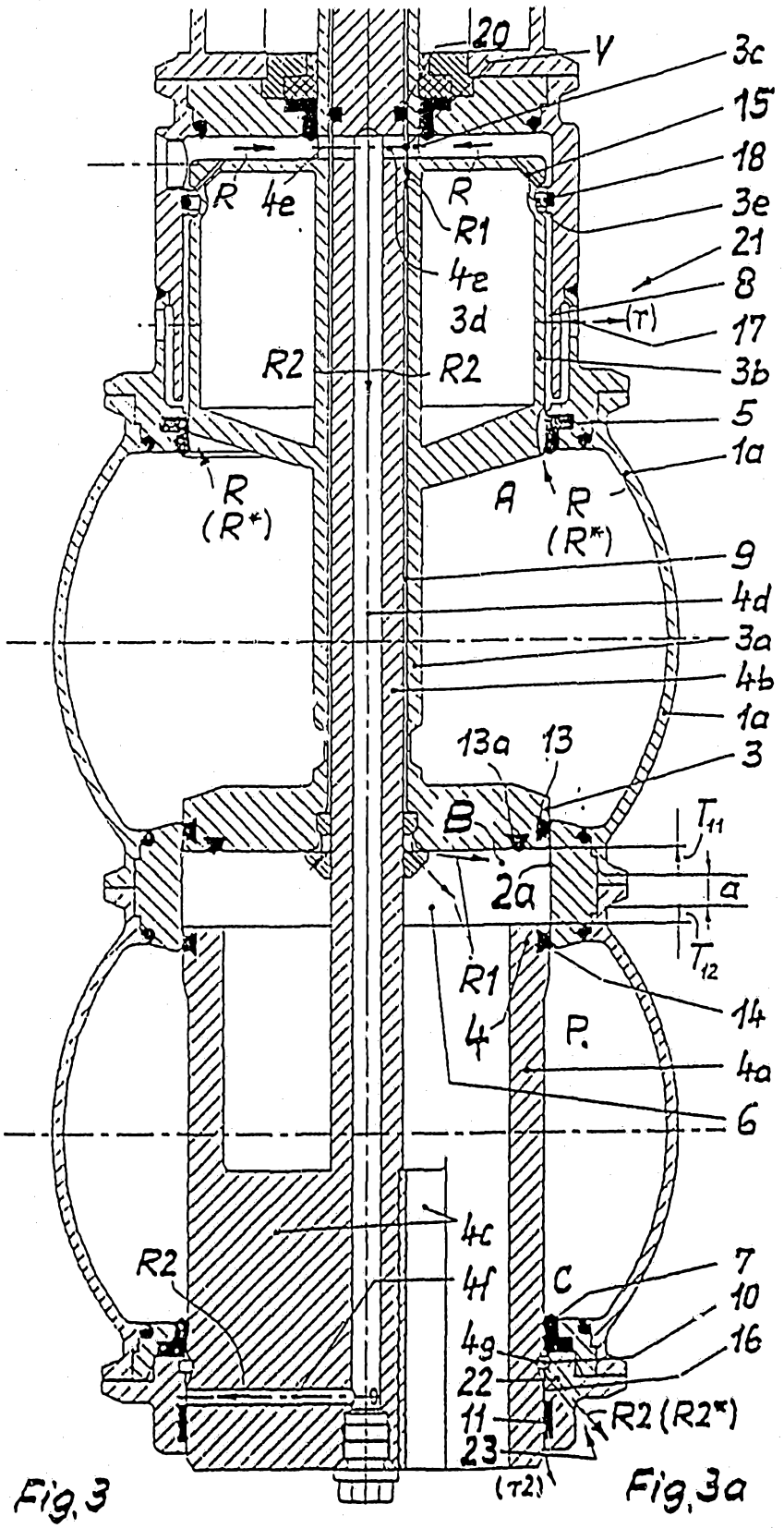

Fig. 3

Fig. 3a

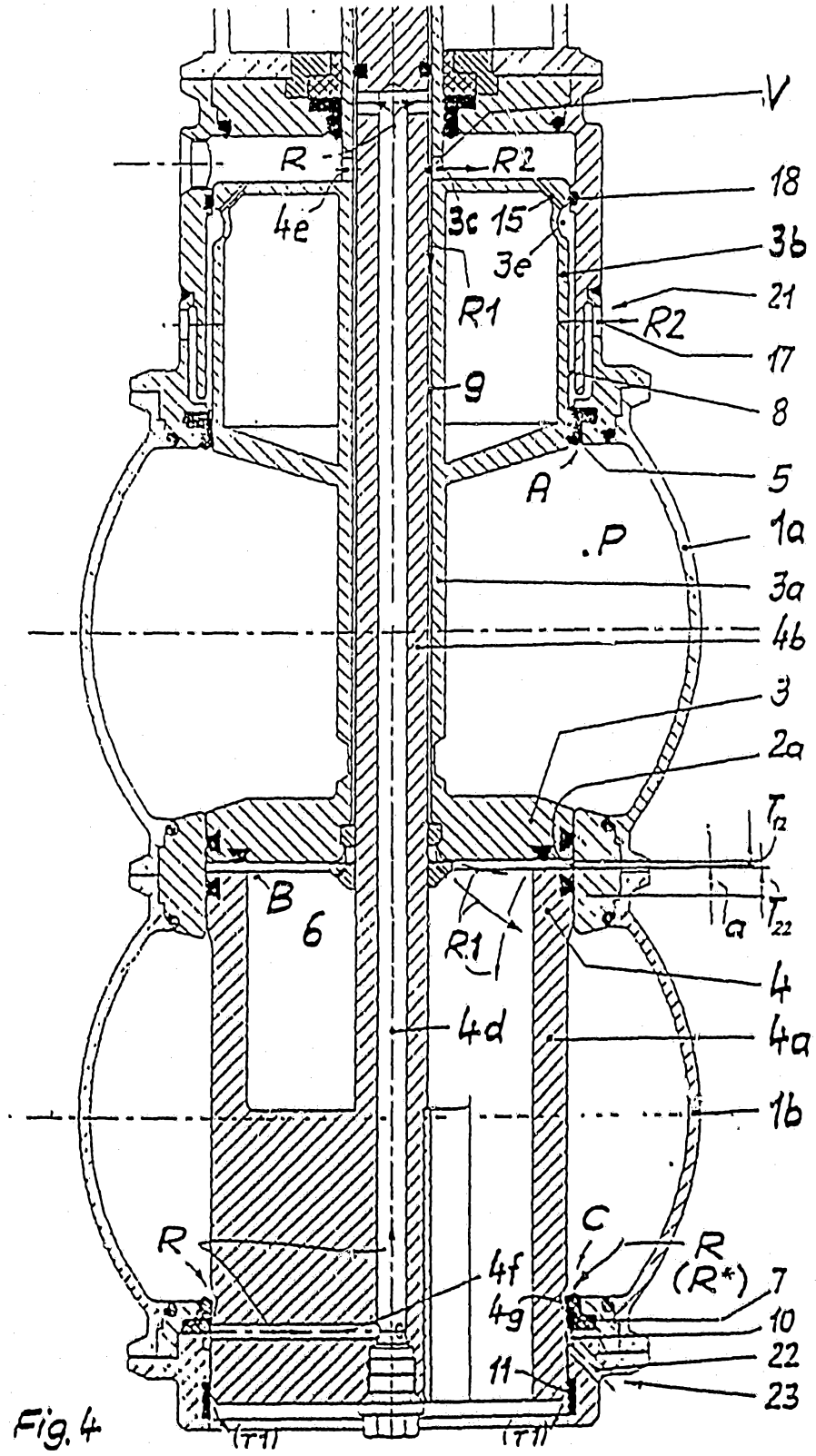
V
R
R2
18
4e
3c
15
3b
3e
21
R1
R2
17
9
8
5
A
P
1a
3a
4b
3
2a
B
6
R1
4
4d
4a
1b
C
R
R
(R*)
7
4f
4g
10
22
11
23
(T1)
(T1)

Fig. 4

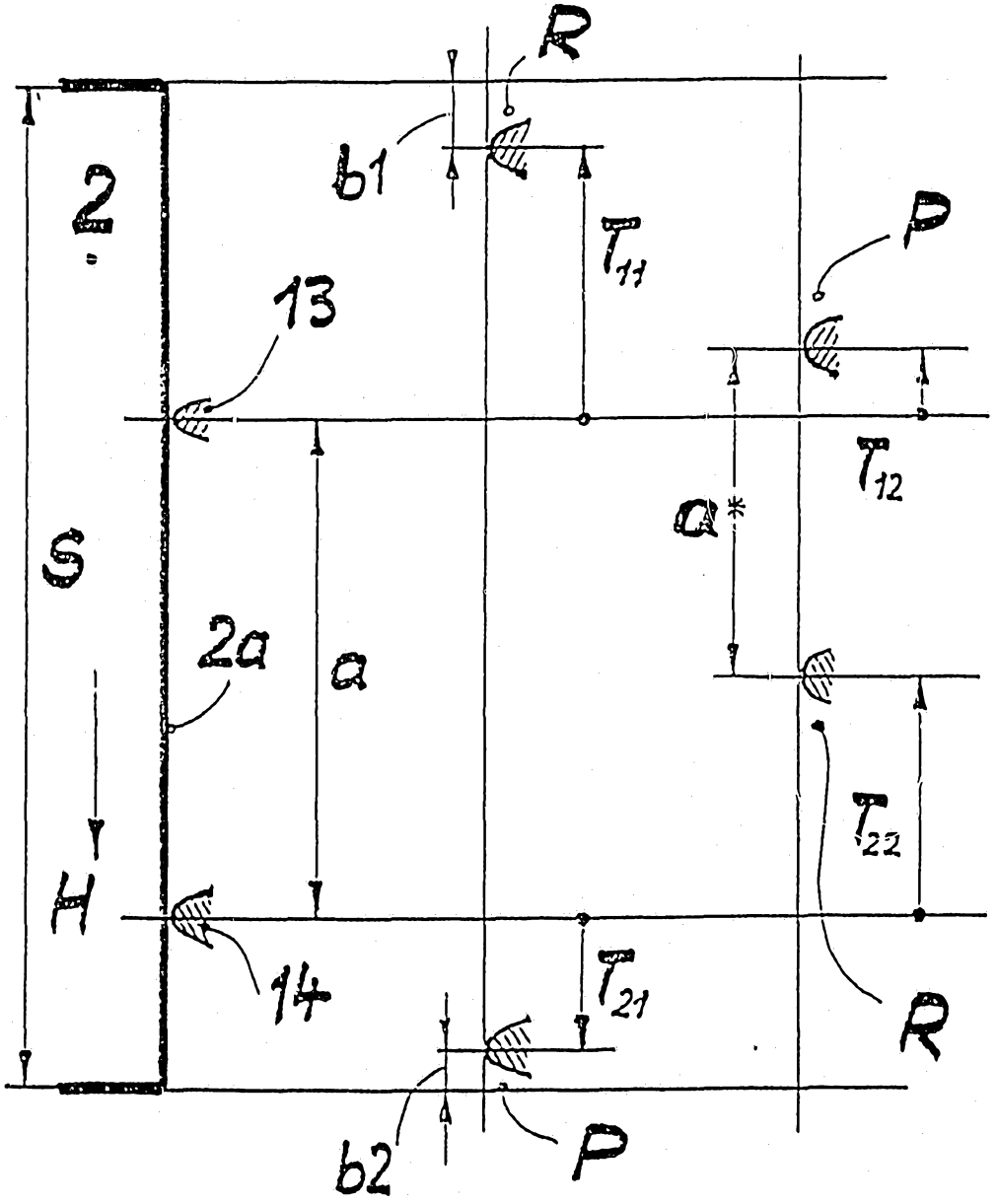

Fig. 5

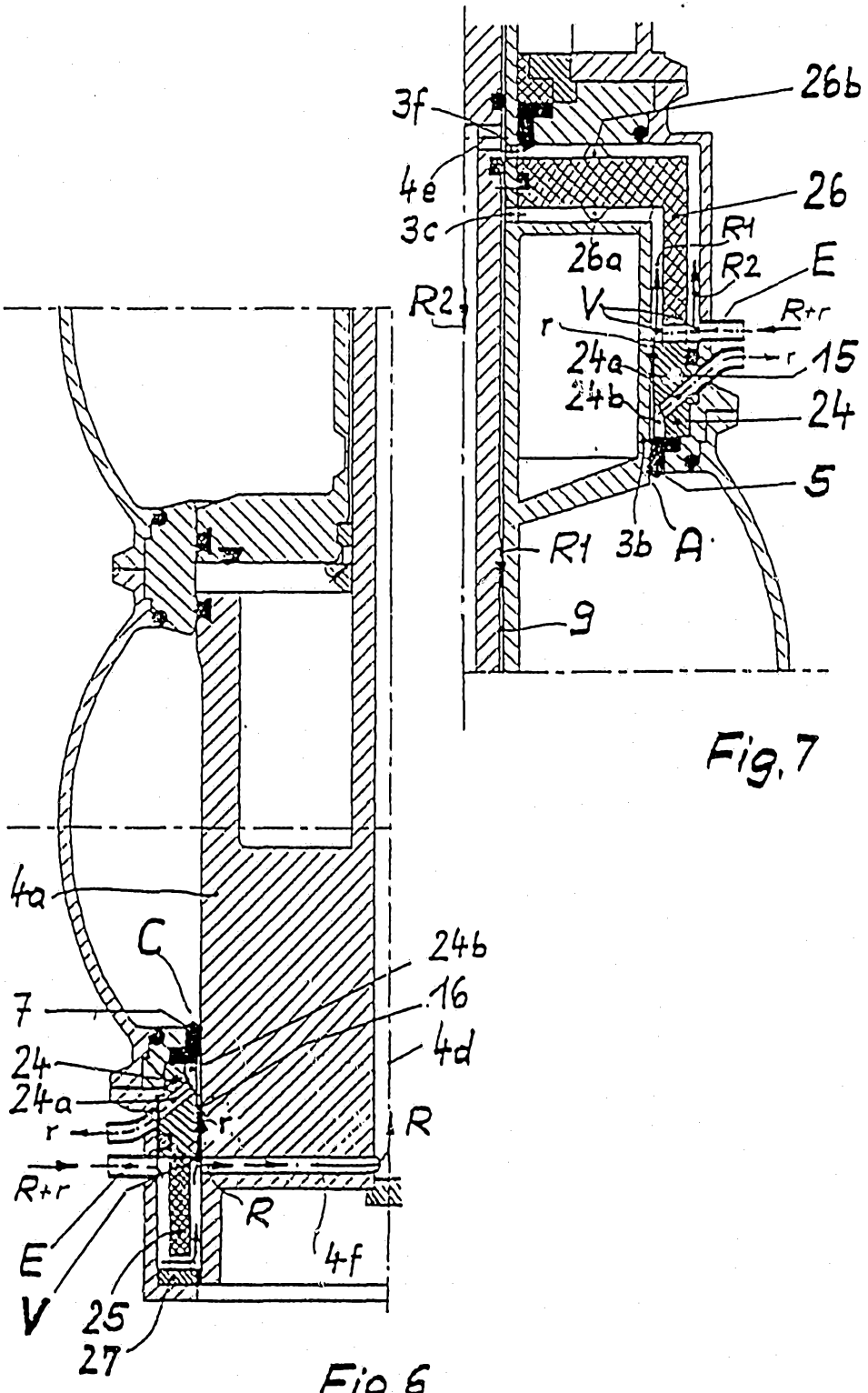
4a
C
24b
16
7
4d
24
24a
r
r
R
R+r
R
4f
E
V
25
27

Fig. 6

3f
26b
4e
26
3c
R1
26a
R2
E
R2
V
R+r
r
r
15
24a
24b
24
5
R1
3b
A
9

Fig. 7

INTERNATIONAL SEARCH REPORT

International application No.
PCT/EP 92/01275

A. CLASSIFICATION OF SUBJECT MATTER

Int.Cl.[5]: F 16 K 1/44

According to International Patent Classification (IPC) or to both national classification and IPC

B. FIELDS SEARCHED

Minimum documentation searched (classification system followed by classification symbols)

Int.Cl.[5]: F 16 K

Documentation searched other than minimum documentation to the extent that such documents are included in the fields searched

Electronic data base consulted during the international search (name of data base and, where practicable, search terms used)

C. DOCUMENTS CONSIDERED TO BE RELEVANT

Category*	Citation of document, with indication, where appropriate, of the relevant passages	Relevant to claim No.
Y	DE, C 2, 3701027 (MIETH, HANS OTTO) 20 July 1989, see figures 1-5B -.-	1-2
Y	DK, B, 158111 (HOLSTEIN UND KAPPERT GMBH) 26 March 1990, see figures 1,2,3 -.-	1,8,17
Y	EP, A1, 0039319 (ALFA-LAVAL AB) 4 November 1981, see figure 1, claim 1 ----------	1,8,9,17

☐ Further documents are listed in the continuation of Box C. ☐ See patent family annex.

* Special categories of cited documents:

"A" document defining the general state of the art which is not considered to be of particular relevance

"E" earlier document but published on or after the international filing date

"L" document which may throw doubts on priority claim(s) or which is cited to establish the publication date of another citation or other special reason (as specified)

"O" document referring to an oral disclosure, use, exhibition or other means

"P" document published prior to the international filing date but later than the priority date claimed

"T" later document published after the international filing date or priority date and not in conflict with the application but cited to understand the principle or theory underlying the invention

"X" document of particular relevance; the claimed invention cannot be considered novel or cannot be considered to involve an inventive step when the document is taken alone

"Y" document of particular relevance; the claimed invention cannot be considered to involve an inventive step when the document is combined with one or more other such documents, such combination being obvious to a person skilled in the art

"&" document member of the same patent family

Date of the actual completion of the international search	Date of mailing of the international search report
7 October 1992 (07.10.92)	3 November 1992 (03.11.92)
Name and mailing address of the ISA/ European Patent Office	Authorized officer
Facsimile No.	Telephone No.

Form PCT/ISA/210 (second sheet) (July 1992)

ANNEX TO THE INTERNATIONAL SEARCH REPORT ON INTERNATIONAL PATENT APPLICATION NO. PCT/EP 92/01275

SA 62282

This annex lists the patent family members relating to the patent documents cited in the above-mentioned international search report.
The members are as contained in the European Patent Office EDP file on 28/08/92
The European Patent office is in no way liable for theseparticulars which are merely given for the purpose of information.

Patent document cited in search report	Publication date	Patent family member(s)		Publication date
DE-C2- 3701027	20/07/89	AU-B-	609772	09/05/91
		AU-D-	1151888	10/08/88
		EP-A-B-	0279177	24/08/88
		EP-A-	0299029	18/01/89
		EP-A-	0387918	19/09/90
		JP-T-	1501889	29/06/89
		US-A-	5085241	04/02/92
		WO-A-	88/05512	28/07/88
		ZA-A-	8800260	29/06/88
DK-B- 158111	26/03/90	NONE		
EP-A1- 0039319	04/11/81	CA-A-	1167017	08/05/84
		JP-C-	1448543	11/07/88
		JP-A-	56164282	17/12/81
		JP-B-	62056395	25/11/87
		SE-B-	432982	30/04/84
		SE-A-	8003130	25/10/81
		US-A-	4460014	17/07/84

For more details about this annex : see Official Journal of the European patent Office, No. 12/82

EPO FORM P0479

INTERNATIONALER RECHERCHENBERICHT

Internationales Aktenzeichen PCT/EP 92/01275

I. KLASSIFIKATION DES ANMELDUNGSGENSTANDS (bei mehreren Klassifikationssymbolen sind alle anzugeben)[6]

Nach der Internationalen Patentklassifikation (IPC) oder nach der nationalen Klassifikation und der IPC

Int.Cl.5 F 16 K 1/44

II. RECHERCHIERTE SACHGEBIETE

Recherchierter Mindestprüfstoff[7]

Klassifikationssystem	Klassifikationssymbole
Int.Cl.5	F 16 K

Recherchierte nicht zum Mindestprüfstoff gehörende Veröffentlichungen, soweit diese unter die recherchierten Sachgebiete fallen[8]

III. EINSCHLÄGIGE VERÖFFENTLICHUNGEN[9]

Art *	Kennzeichnung der Veröffentlichung[11], soweit erforderlich unter Angabe der maßgeblichen Teile[12]	Betr. Anspruch Nr.[13]
A	DE, C2, 3701027 (MIETH, HANS OTTO) 20 Juli 1989, siehe Figuren 1-5B	1-2
	--	
Y	DK, B, 158111 (HOLSTEIN UND KAPPERT GMBH) 26 März 1990, siehe Figuren 1,2,3	1,8, 17
	--	
Y	EP, A1, 0039319 (ALFA-LAVAL AB) 4 November 1981, siehe Figur 1, Anspruch 1	1,8,9, 17
	--	
	--------	

* Besondere Kategorien von angegebenen Veröffentlichungen[10]:

"A" Veröffentlichung, die den allgemeinen Stand der Technik definiert, aber nicht als besonders bedeutsam anzusehen ist

"E" älteres Dokument, das jedoch erst am oder nach dem internationalen Anmeldedatum veröffentlicht worden ist

"L" Veröffentlichung, die geeignet ist, einen Prioritätsanspruch zweifelhaft erscheinen zu lassen, oder durch die das Veröffentlichungsdatum einer anderen im Recherchenbericht genannten Veröffentlichung belegt werden soll oder die aus einem anderen besonderen Grund angegeben ist (wie ausgeführt)

"O" Veröffentlichung, die sich auf eine mündliche Offenbarung, eine Benutzung, eine Ausstellung oder andere Maßnahmen bezieht

"P" Veröffentlichung, die vor dem internationalen Anmeldedatum, aber nach dem beanspruchten Prioritätsdatum veröffentlicht worden ist

"T" Spätere Veröffentlichung, die nach dem internationalen Anmeldedatum oder dem Prioritätsdatum veröffentlicht worden ist und mit der Anmeldung nicht kollidiert, sondern nur zum Verständnis des der Erfindung zugrundeliegenden Prinzips oder der ihr zugrundeliegenden Theorie angegeben ist

"X" Veröffentlichung von besonderer Bedeutung, die beanspruchte Erfindung kann nicht als neu oder auf erfinderischer Tätigkeit beruhend betrachtet werden

"Y" Veröffentlichung von besonderer Bedeutung, die beanspruchte Erfindung kann nicht als auf erfinderischer Tätigkeit beruhend betrachtet werden, wenn die Veröffentlichung mit einer oder mehreren anderen Veröffentlichungen dieser Kategorie in Verbindung gebracht wird und diese Verbindung für einen Fachmann naheliegend ist

"&" Veröffentlichung, die Mitglied derselben Patentfamilie ist

IV. BESCHEINIGUNG

Datum des Abschlusses der Internationalen Recherche	Absendedatum des Internationalen Recherchenberichts
7. Oktober 1992	03 NOV 1992
Internationale Recherchenbehörde	**Unterschrift des bevollmächtigten Bediensteten**
Europäisches Patentamt	C. Westberg

ANHANG ZUM INTERNATIONALEN RECHERCHENBERICHT ÜBER DIE INTERNATIONALE PATENTANMELDUNG NR. PCT/EP 92/01275

SA 62282

In diesem Anhang sind die Mitglieder der Patentfamilien der im obengenannten internationalen Recherchenbericht angeführten Patentdokumente angegeben.
Die Angaben über die Familienmitglieder entsprechen dem Stand der Datei des Europäischen Patentamts am 28/08/92
Diese Angaben dienen nur zur Unterrichtung und erfolgen ohne Gewähr.

Im Recherchenbericht angeführtes Patentdokument	Datum der Veröffentlichung	Mitglied(er) der Patentfamilie		Datum der Veröffentlichung
DE-C2- 3701027	20/07/89	AU-B-	609772	09/05/91
		AU-D-	1151888	10/08/88
		EP-A-B-	0279177	24/08/88
		EP-A-	0299029	18/01/89
		EP-A-	0387918	19/09/90
		JP-T-	1501889	29/06/89
		US-A-	5085241	04/02/92
		WO-A-	88/05512	28/07/88
		ZA-A-	8800260	29/06/88
DK-B- 158111	26/03/90	KEINE		
EP-A1- 0039319	04/11/81	CA-A-	1167017	08/05/84
		JP-C-	1448543	11/07/88
		JP-A-	56164282	17/12/81
		JP-B-	62056395	25/11/87
		SE-B-	432982	30/04/84
		SE-A-	8003130	25/10/81
		US-A-	4460014	17/07/84