(No Model.)

2 Sheets—Sheet 1.

S. S. MOHN.

WOOD SAWING MACHINE.

No. 436,669. Patented Sept. 16, 1890.

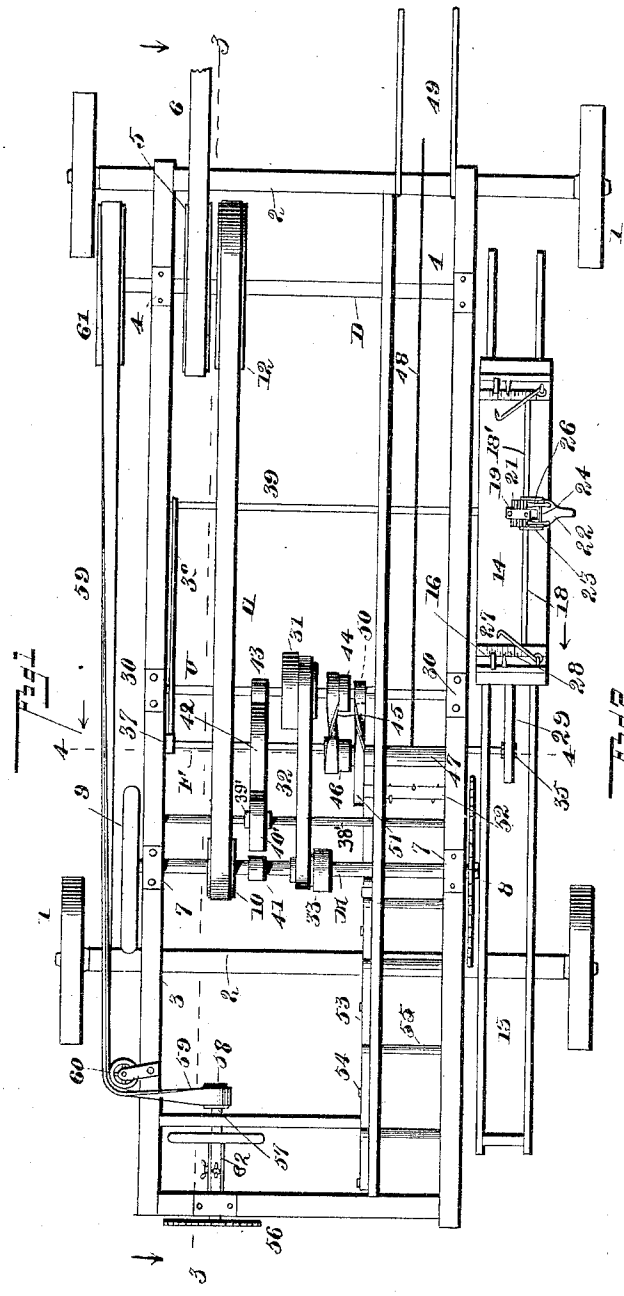

Fig. 1.

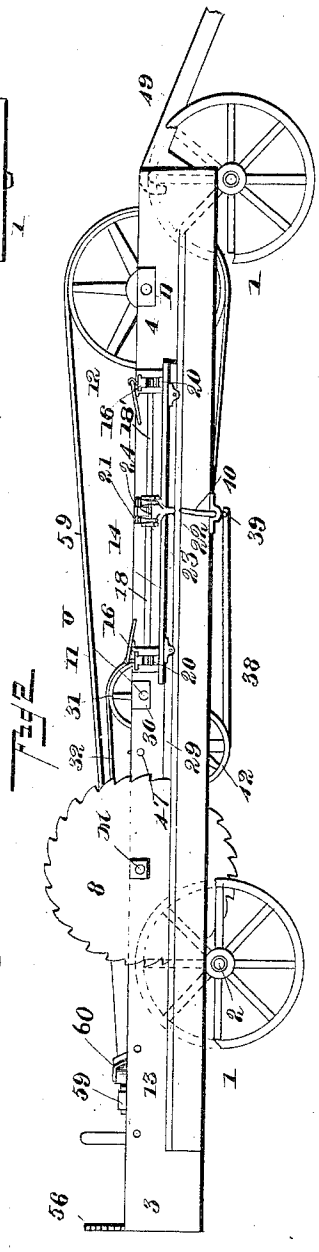

Fig. 2.

Witnesses

John Smirie

N. L. Collamer.

Inventor

Sebastian B. Mohn

By his Attorneys

C. A. Snow & Co.

THE NORRIS PETERS CO., PHOTO-LITHO., WASHINGTON, D. C.

(No Model.) 2 Sheets—Sheet 2.

S. S. MOHN.

WOOD SAWING MACHINE.

No. 436,669. Patented Sept. 16, 1890.

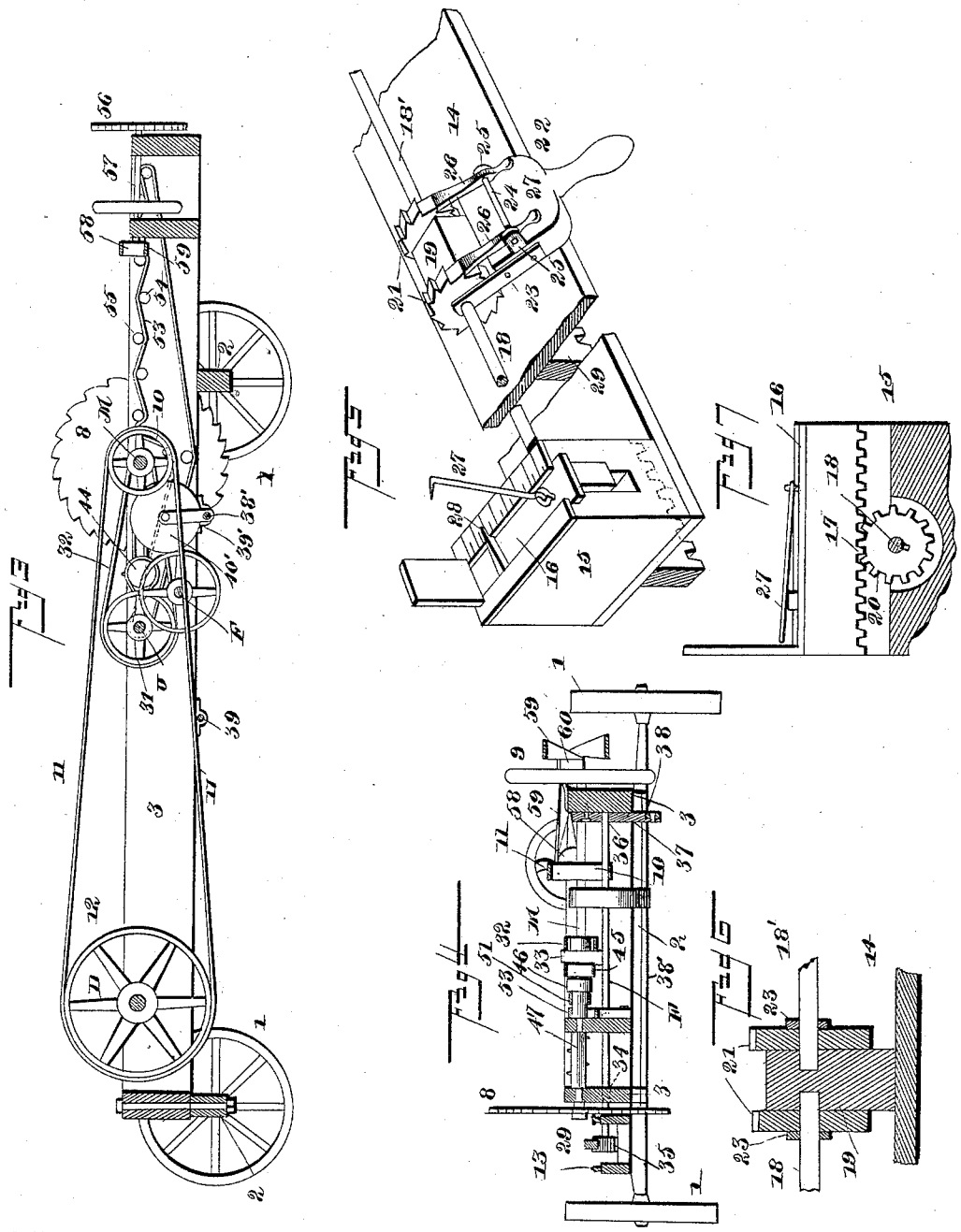

Witnesses
John Imrie
N. L. Collamer

Inventor
Sebastian S. Mohn
By his Attorneys
C. A. Snow & Co.

THE NORRIS PETERS CO., PHOTO-LITHO., WASHINGTON, D. C.

UNITED STATES PATENT OFFICE.

SEBASTIAN S. MOHN, OF CLYDE, OHIO.

WOOD-SAWING MACHINE.

SPECIFICATION forming part of Letters Patent No. 436,669, dated September 16, 1890.

Application filed February 5, 1890. Serial No. 339,276. (No model.)

To all whom it may concern.

Be it known that I, SEBASTIAN S. MOHN, a citizen of the United States, residing at Clyde, in the county of Sandusky and State of Ohio, have invented a new and useful Wood-Sawing Machine, of which the following is a specification.

This invention relates to wood-sawing machines, more especially to the appliances relating thereto and which assist in rendering the machine entire, complete, and perfect in all its details, and capable of doing all the work from the drawing of the log toward the machine to the delivering of the finished pickets, slats, or other pieces of work at a point where they can be conveniently piled or loaded onto a vehicle for transportation.

The object of the present invention is to provide a machine which shall be portable and which will accomplish the work desired with the use of but little power, the latter being furnished from a traction or other engine. This object I accomplish by my wood-sawing machine, which consists, essentially, of the elements necessary to carry on the work as are used in ordinary sawing-machines, as well as of adjunctive and specific details of construction by means of which the logs are drawn toward the machine. The off-fall from the log is delivered mechanically instead of by a tail-man, as heretofore, and the said man is utilized to cut the off-fall from the log into pickets, slats, or whatever work is being turned out, by means of an independent saw rotating at a high rate of speed and located near the rear end of the machine.

The invention also consists of certain auxiliaries, which tend to enhance the value of the completed machine, all as hereinafter more fully described, and illustrated in the accompanying drawings, in which—

Figure 1 is a plan view of the wood-sawing machine complete in its preferred form. Fig. 2 is a side elevation of the same. Fig. 3 is a vertical longitudinal section on the line 3 3 of Fig. 1, viewed in the direction of the arrows. Fig. 4 is a transverse vertical section on the line 4 4 of Fig. 1. Fig. 5 is an enlarged perspective detail of the carriage which I preferably employ, one of the head-blocks being broken away. Fig. 6 is a vertical longitudinal section through the double-pawl mechanism for feeding the dogs of the head-blocks forwardly. Fig. 7 is a vertical longitudinal section of one of the head-blocks, showing its rack and operating-gear.

1 are the wheels upon axles 2, which carry the frame-work 3 of my improved portable sawing-machine, it being understood that the front axle of this machine is pivoted on a king-bolt, and may be drawn by horses, by traction-engine, or by other suitable power, from place to place.

Journaled in bearings 4, near one end of the frame 3, is what we will call the "driving-shaft" D, and upon this shaft is a pulley 5, to which power is applied by a belt 6, leading from any suitable source, such as the traction-engine.

Journaled in bearings 7, near the center of the frame-work 3, is what we will call the "main shaft" M, carrying upon one end a saw 8 and preferably upon the other end a fly-wheel 9, and on this shaft is keyed a pulley 10, from which is led a band 11, which passes around a large pulley 12 on the driving-shaft D, by which means power is transmitted from the driving-shaft to the main shaft at a considerably increased speed.

13 are tracks outside the main frame 3, the outer one being preferably sharp and the inner one T-shaped in cross-section, and 14 is a carriage which slides upon said track in the usual manner. At each end of the carriage is a standard 15, in which slides the head-block 16, having a rack 17 on its lower face, and a longitudinal shaft 18 is journaled in the standard 15, and also in a journal-box 19 near the center of the carriage. Upon one end of this shaft 18 is keyed a gear 20, which meshes with the rack 17, and upon the other end of the shaft is keyed a ratchet 21, as best seen in Fig. 5. The other end of the carriage 14 is constructed in a similar manner, and the two shafts 18 and 18′ are journaled in the box 19 independently of each other, as shown in Fig. 6. A double pawl 22 has side arms 23 loosely journaled upon each of the shafts 18 just inside the two ratchet-wheels 21, and loosely mounted upon a rod 24, extending between lugs 25 on the upper face of this double pawl 22, is a pair of pawls proper 26, whose rear

ends 27 are flattened to form thumb-pieces whereby their points may be disengaged from the ratchets when the thumb-pieces are depressed, as will be clearly understood. The head-blocks may be provided with the ordinary dogs 27 and with gages 28, if desired. The carriage 14 is provided with the longitudinal rack 29, as usual.

Journaled in bearings 30 in the frame-work 3 is what we will call the "supplementary shaft" U, and a pulley 31 on this shaft is connected by a band 32 with the pulley 33 on the main shaft M, whereby motion is transmitted thereto.

Journaled at 34 in the front bar of the frame 3 is what we will call the "feed-shaft" F, carrying a gear 35 on its free end, which stands, preferably, about midway between the tracks 13 and engages the rack 29 on the lower side of the carriage 14. The other end of the feed-shaft F is journaled at 36 in a moving bar 37, which is pivoted at its upper end at a suitable point in the frame-work, and which at its lower end is connected by the rod 38 with the cranked end of the rod 39, which extends across the frame-work and is turned up at 40 at its forward end to form a handle, whereby when the handle is vibrated the rod 38 will move the bar 37 and swing the shaft F at its inner end lengthwise of the frame-work. A rod 38′ extends across the frame, and a pair of arms 39′, mounted loosely thereon, carry an idle-wheel 40′, pivoted between their upper ends, such idle-wheel making frictional contact with a pulley 41 on the main shaft M.

Upon the feed-shaft F is a pulley 42, which when the handle 40 is moved to the left is thrown against a small pulley 43 on the supplemental shaft U, whereby the feed-shaft and its pinion 35 are caused to rotate slowly toward the saw, so as to properly feed the log being cut. When the handle 40 is thrown to the right, the feed-shaft F is moved and the pulley 42 is thrown against the idle-wheel 40 and that in turn against the small pulley 41 upon the main shaft M, whereby the feed-shaft F and its pinion 35 are rotated at a considerably increased speed to return the carriage 14 and with it the log for a new cut.

I preferably locate the pulley 44 upon the supplemental shaft U about where shown and connect it by a belt 45 with a fast and loose pulley 46 upon the end of the rod or drum 47, which is journaled in the frame-work 3. The belt 45 is preferably twisted, in order to give the drum 47 a rotation in the proper direction, and I also employ some mechanism for shifting the belt from the fast to the loose pulley 46, from the outside or front of the machine, which mechanism is well understood, and I have not considered it necessary of illustration. It will thus be seen that the speed from the engine is increased up to the main shaft M, but considerably decreased to the supplemental shaft and again to the drum 47. A rope or chain 48 is secured to or wound upon the drum 47, and leads outwardly from the feed end of the machine and over an inclined logway 49, leading from the ground up to the frame-work 3, and when the machine is being operated and the drum 47 is rotating this chain 48 will draw slowly upon a heavy log, which may be at some distance from the machine, and gradually bring that log up to the machine by the logway 49 and onto the upper side of the frame-work in position to be canted over onto the carriage when the log then being operated upon is consumed. The supplemental shaft U carries a small pulley 50, and leading therefrom is a twisted belt 51, which passes over a pulley on the end of a drum 52, preferably having teeth on its periphery, as shown in Fig. 1. By this means the off-fall from the log will be given a forward and onward impetus by the toothed drum 52 just at the proper moment.

A belt 53 passes around the supplemental shaft U, and is led over a series of idle-pulleys 54, carried by the frame 3 and below the inner ends of rollers 55, journaled in the frame 3, all as shown in Figs. 1 and 3. By this means the off-fall, after having been given an onward impetus by the toothed drum 52, which is in advance of the saw 8, is taken up and carried slowly forward by the rollers 55, the slabs and refuse being allowed to fall off the end of the frame and being taken away and used for fuel or other purposes, and the finished plank or strips being taken from the rollers 55 and further treated, as may be desired. The log having been thus sawed, preferably, into planks of about two inches in thickness, when this machine is making pickets, bed-slats, whiffletrees, &c., the second man, who stands at the delivery end of the frame, can take the planks, which are passed forward on the rollers 55, and feed them upon a small table (not shown) to a small-sized rip-saw 56, carried by a shaft 57, journaled longitudinally of the frame about where shown in Fig. 1. This shaft has a pulley 58, which is connected by the belt 59, passing over two independent idle-wheels 60, carried by the frame 3, with a large pulley 61, keyed on the driving-shaft D, and preferably at the other side of the power-pulley 5 from the large pulley 12, which drives the main saw 8. It will be understood that I do not limit myself to the use of this small saw 56, because my device is operative without it; but I consider it an important detail, because the first operator who controls the carriage and who takes the log before it is sawed at all and delivers it in planks has hardly time or opportunity to afterward rip these planks into pickets or slats; but by the employment of the small saw 56 the tail-man, who heretofore carried away the planks, has now an opportunity of ripping these planks up into pickets simultaneously with the sawing of the next log, and the whole operation is accomplished on the same machine, by the same power, and by the same number of hands where heretofore the machine, the power, and the two men only turned out the two-inch plank, and an-

other operation was necessary to convert this plank into pickets.

With the above construction, power being applied to the pulley 5, the driving-shaft D is rotated. The belt 12 drives the main shaft M and the main saw 8. The belt 32 drives the supplemental shaft U, and that, through its pulley 43 or through the pulleys 40 and 41, as the case may be, drives the feed-shaft F and reciprocates the carriage 14, as desired. At the same time the belt 45 drives the drum 47 and another log is being drawn up the logway 49 into position. The toothed drum 52 is also driven at the same time by the belt 51, and the off-fall from the saw is given a forward impetus, and the several rollers 55 are driven by the belt 53, whereby this forward movement of the off-fall is continued. The belt 59 from the pulley 61 on the driving-shaft drives the small saw 56 and the tailman who takes the off-fall from the rollers 55 feeds it to the small saw and rips it into pickets. When it is desired to cut the log at an angle to its longitudinal line, one of the pawls 26 on the double pawl 22 is tripped or disengaged by pressing upon its flattened end 27, after which by working the handle of the double pawl the other pawl 26 will rotate its shaft 18 and move the head-block 16 at its end of the carriage without effecting the movement of the other head-block, all as is well understood in this art.

It will be understood that the shaft 57 is driven by a comparatively small pulley 58, through a belt 59, from a comparatively large pulley 61, and hence this shaft has quite a rapid rotation, and, if desired and also if the driving-machine furnishes sufficient power for the purpose, I may apply the cutter-blades 62 to this shaft, whereby the machine may be used to plane, work or shape it, or to form beads or moldings thereof.

One of the great objects of this machine is to do all the work with the limited amount of power generated by an ordinary traction-engine, and I have made numerous experiments in the arrangements of belts and pulleys, in order to attain the best results with the means at hand.

Heretofore it has been the custom to apply the belt 6, which led from the engine, directly to the pulley upon the main shaft M; but in that arrangement either the engine had to be driven at a high rate of speed or else the power had to be belted down to this main shaft, in order to give the saw 8 the proper number of revolutions. My experience has taught me, however, that by using the driving-shaft D, belting the power from the engine down to the shaft, and again thence down to the main shaft I utilize the power of the engine so fully and so well that with the same power that heretofore ran the saw 8 only I am now enabled to employ the extra belt 59 and run the small saw 56 in addition. I have also discovered that if the power is belted down from the pulley 12 to the pulley 10, whereby speed is gained but power is lost, and is then belted up from the main shaft M, through the belt 32, to the supplemental shaft U, the machine will require five pounds less of steam to do the same work and to drive all the parts at the same speed than it will if the belt 32 be omitted; rather, if the supplemental shaft U be driven by a belt direct from the driving-shaft D and over such pulleys, that the supplemental shaft will be rotated at the same rate of speed. I account for this from the fact that, theoretically, the belt 32, which drives the shaft U at less speed than the shaft M, requires as much less power to do so as the inverse ratio between the sizes of the pulley 33 and that pulley which, placed on the driving-shaft D, would give the same speed of rotation to the shaft U if it were belted around the pulley 31.

What I claim as new is—

1. The combination, with the main shaft, the saw, the carriage-operating mechanism therefor, and means for driving the same, of the supplemental shaft driven from said main shaft, a series of rollers journaled in the main frame-work in rear of said main shaft, and a belt leading from said supplemental shaft over a series of idle-pulleys and beneath the ends of said rollers, substantially as and for the purpose set forth.

2. The combination, with the main shaft, the saw, the carriage moving along the outer side of the saw, the operating mechanism therefor, and power for driving said main shaft, of the supplemental shaft, a belt connecting it with the main shaft across said logway, a toothed drum in advance of said main shaft, a pulley on said supplemental shaft, a twisted belt connecting said pulley with the shaft of said toothed drum, a series of rollers in rear of said main shaft, and a belt leading around said supplemental shaft over a number of idle-wheels and beneath the inner ends of said rollers, whereby they are rotated at less speed than the toothed drum, substantially as and for the purpose set forth.

3. In a wood-sawing machine, the combination, with the main shaft, the main saw, the longitudinal tracks, the carriage moving thereon, power for operating the same, and with the small saw at the delivery end of the machine, and means for driving this saw, of the drum 47 in advance of the main saw, connections between this drum and a moving part of the mechanism, and a chain leading from the drum alongside said track and over a logway at the feed end of the machine, substantially as and for the purpose set forth.

4. The combination, with the main shaft carrying the saw, the driving-shaft belted down to the main shaft, and means for operating the driving-shaft, of the supplemental shaft belted up from the main shaft, pulleys 41 and 43 on said main and supplemental shafts, a friction-pulley 40′, journaled in a

movable support 39′, adjacent said pulley 41, a feed-shaft, a carriage driven thereby, a pulley 42 on said feed-shaft, and means, substantially as described, for moving said pulley against the friction-pulley 40′ or against the pulley 43 on the supplemental shaft, as and for the purpose set forth.

In testimony that I claim the foregoing as my own I have hereto affixed my signature in presence of two witnesses.

SEBASTIAN S. MOHN.

Witnesses:
R. J. MARSHALL,
MYER COHEN.