Oct. 1, 1957 R. C. McNEILL ET AL 2,808,230

OFF-SHORE DRILLING

Filed Jan. 17, 1955 3 Sheets-Sheet 1

FIG. 1.

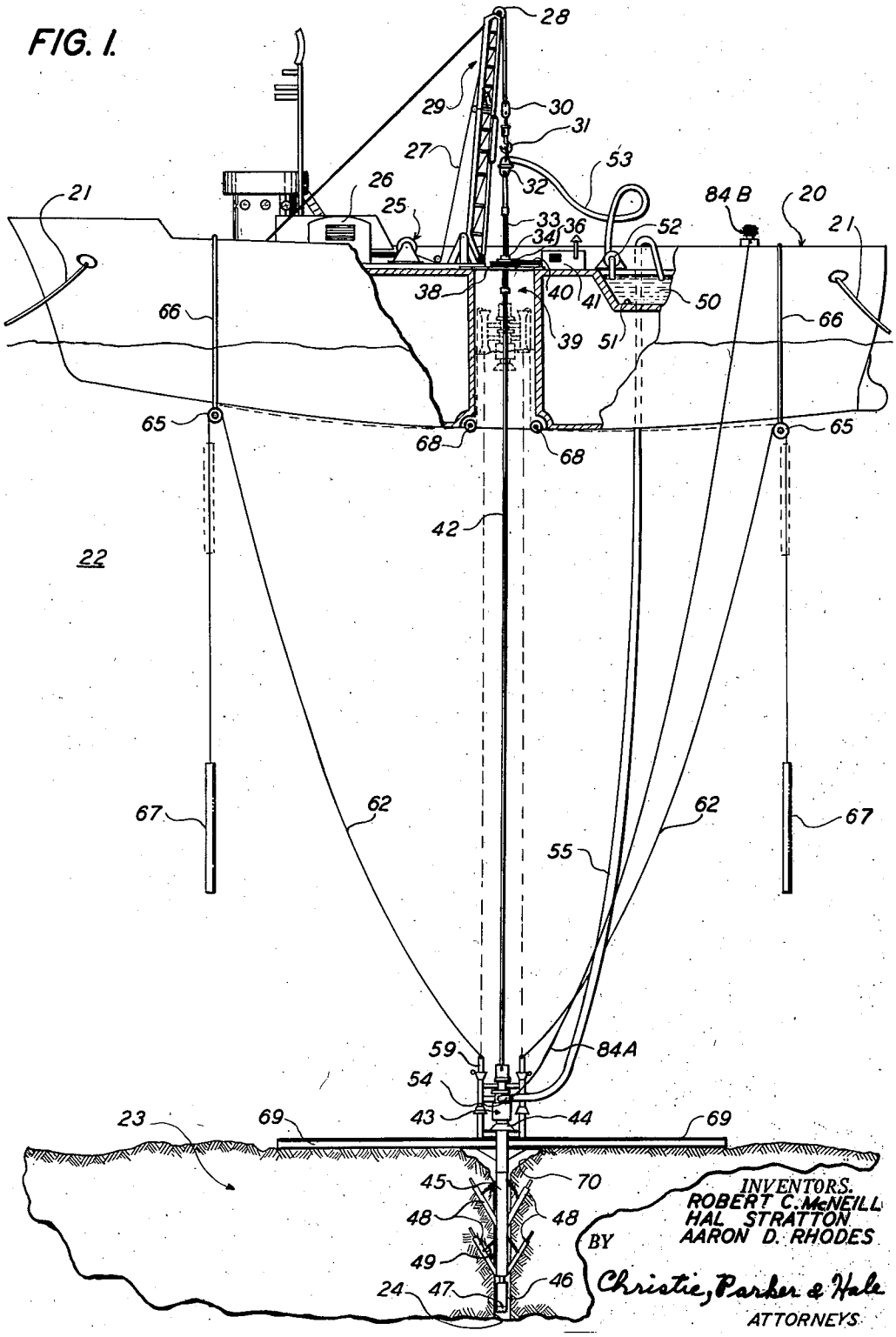

OFF-SHORE DRILLING

Filed Jan. 17, 1955 3 Sheets-Sheet 2

FIG. 2.

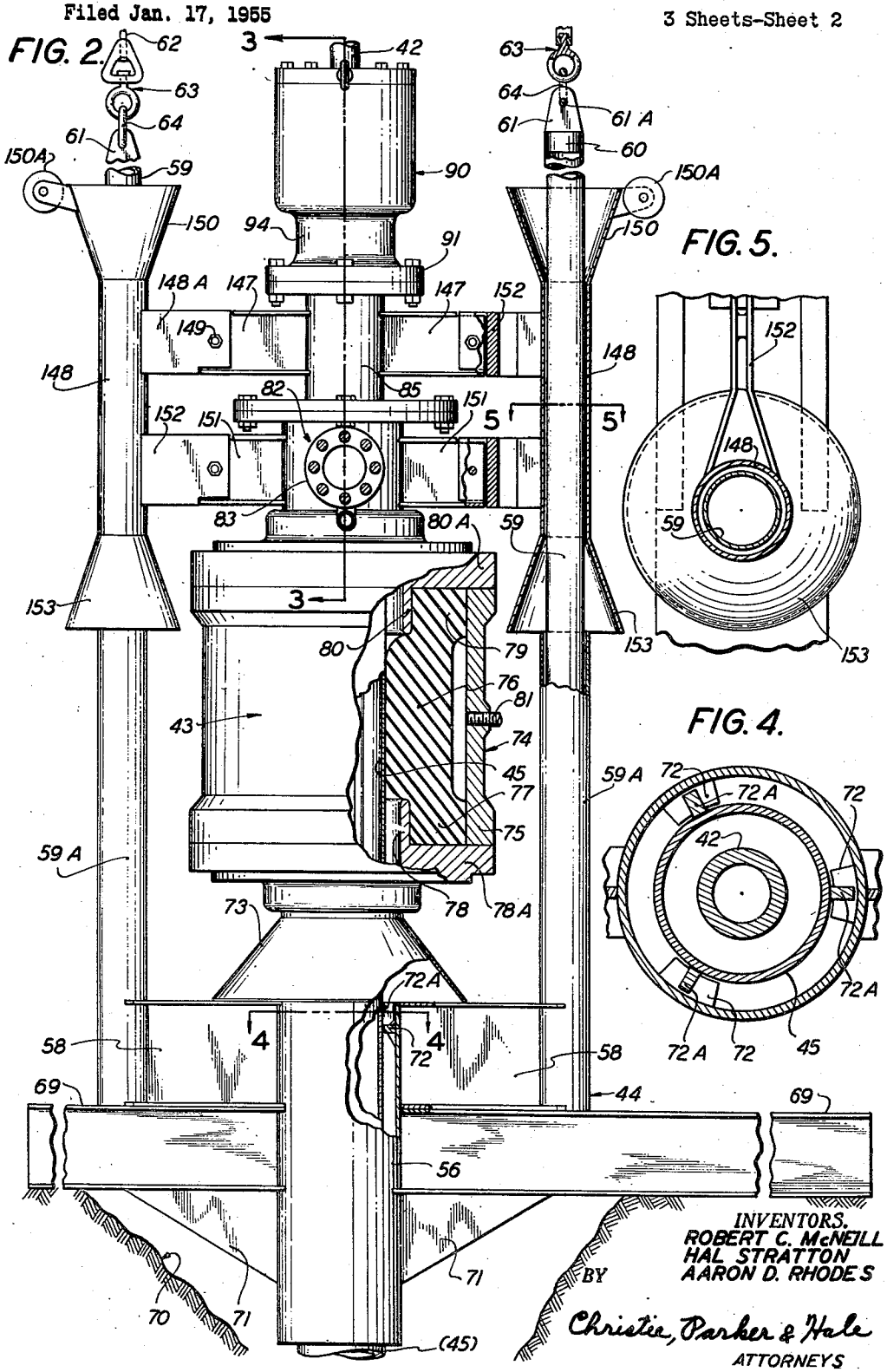

FIG. 5.

FIG. 4.

INVENTORS.
ROBERT C. McNEILL
HAL STRATTON
AARON D. RHODES
BY
Christie, Parker & Hale
ATTORNEYS

OFF-SHORE DRILLING

Filed Jan. 17, 1955 3 Sheets-Sheet 3

FIG. 3.

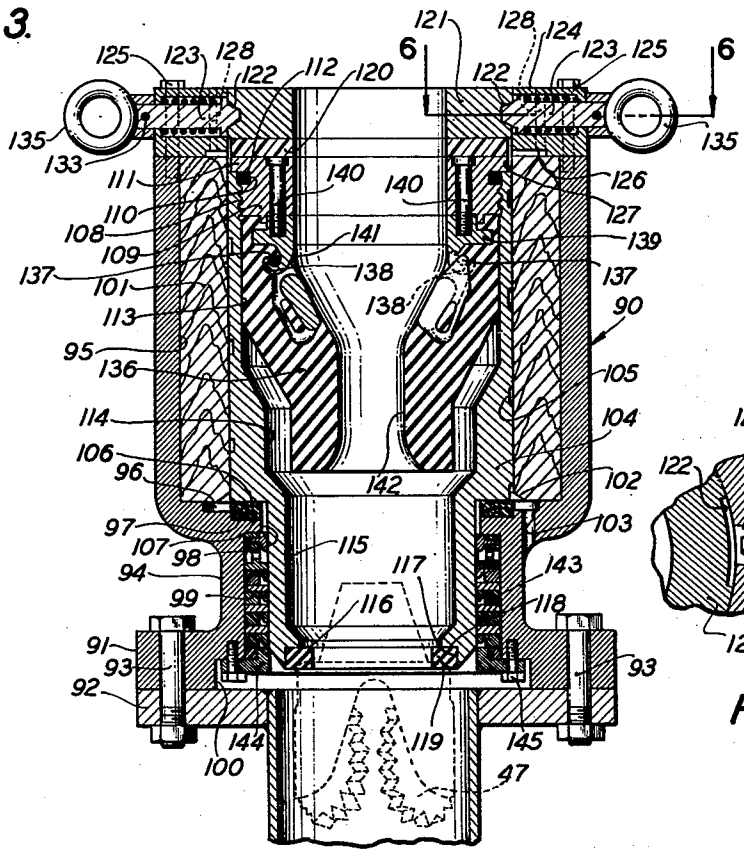

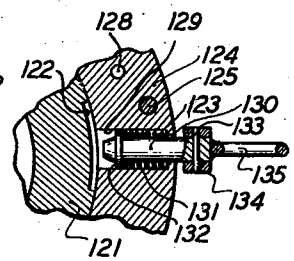

FIG. 6.

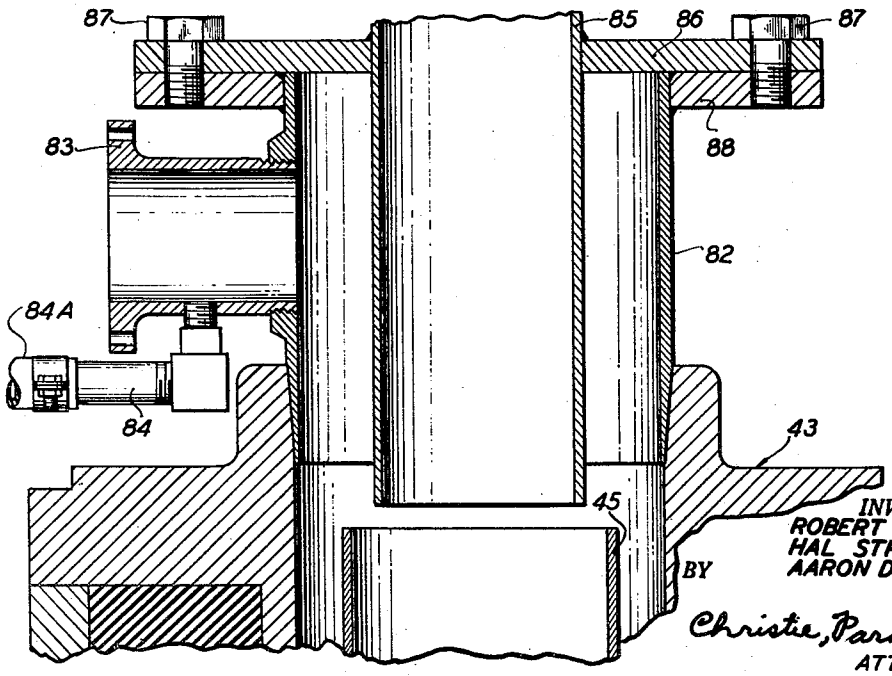

INVENTORS.
ROBERT C. McNEILL
HAL STRATTON
AARON D. RHODES
BY
Christie, Parker & Hale
ATTORNEYS

United States Patent Office

2,808,230

Patented Oct. 1, 1957

1

2,808,230

OFF-SHORE DRILLING

Robert C. McNeill, Long Beach, Hal Stratton, La Habra, and Aaron D. Rhodes, Arcadia, Calif., assignors to Shell Oil Company and Continental Oil Company, both corporations of Delaware, The Superior Oil Company and Union Oil Company of California, both corporations of California; all of Los Angeles, Calif.

Application January 17, 1955, Serial No. 482,206

23 Claims. (Cl. 255—2.5)

This invention relates to apparatus for drilling and working on underwater wells using equipment mounted on a floating vessel.

At the present time, underwater or off-shore well drilling is accomplished from stationary structures rigidly anchored to the underwater formation. These structures provide static bases for the drilling equipment and are satisfactory for relatively shallow water, for example, depths of fifty feet or less. However, for deeper water, for example, depths of several hundred feet, stationary structures are not always economically practical. Furthermore, the structures are sometimes permanent installations which may become navigation hazards.

This invention overcomes the disadvantages of stationary bases for off-shore drilling by providing apparatus for drilling and working on wells from a floating vessel which can be used in water of practically unlimited depth.

One of the principal difficulties in drilling or working on an underwater well from a floating vessel is in making trips in and out of the well, i. e., withdrawing drilling or other equipment from the well and subsequently re-entering the well with such equipment. The movement of a floating vessel due to wind, current and wave action which is almost invariably present makes it difficult to re-locate the well once equipment is removed from it. Another difficulty in off-shore drilling from a floating vessel is the establishment of a return circulation system, i. e., a system in which a drilling fluid may be pumped down the center of a drill pipe, out the end of a drill bit on the lower end of the drill pipe, up the annular space between the well and the drill pipe, and back to the surface where drill cuttings can be removed and the drilling fluid re-circulated.

The present invention overcomes these problems by providing apparatus which facilitates making trips in and out of the well with equipment, and also for obtaining return circulation.

Briefly, the invention contemplates a receiver assembly comprising a well conduit anchored in the upper end of the well, and a pressure circulating head adapted to releasably seal to the receiver assembly. The well conduit is provided with guide means extending toward the water surface whereby the pressure circulating head can be lowered and raised from the floating vessel and guided into and out of sealing relation with the receiver assembly. The circulating head is adapted to lock releasably to the well conduit and form a fluid-tight seal therewith and seal around a drill pipe rotatably disposed through the circulating head, the opening in the receiver unit, and the well conduit. Means are provided for conducting the drilling fluid from the annular space between the drill pipe and the well to the water surface. When the invention is used for drilling in relatively deep water where the height of the drilling mud being returned to the surface might place undue pressure on the well, means are provided for introducing a light phase, such as air into

2

the mud returning to the surface to reduce the weight of the return mud.

In the presently preferred form of the invention a sleeve is disposed about and attached to the upper portion of the well conduit. Two spaced and outwardly extending guide post arms are attached to the sleeve. A separate upwardly extending guide post is attached to the outer portion of each guide post arm and a separate upwardly extending guide line is attached to each guide post. Two relatively long outwardly and oppositely extending support beams are attached to the sleeve so as to span a crater which is sometimes formed at the upper end of the well. A downwardly and outwardly extending flared member arranged to slide on and off the upper end of the well conduit is attached to the lower end of an upright well conduit seal housing having an upright central opening to permit the well conduit seal housing to slide on and off the upper end of the well conduit. A well conduit seal member is provided within the well conduit seal housing so that it can be actuated to seal against the well conduit. Means for actuating the seal from the floating vessel are also provided. A drilling mud conduit is attached to and extends co-linearly upwardly from the well conduit seal housing. A drilling mud outlet is provided in the drilling mud conduit. An upwardly extending aligning conduit of smaller internal diameter than the well conduit is sealed co-linearly in the upper end of the mud conduit and serves to shroud and guide the drill bit into the upper end of the well conduit as the drill bit is lowered into drilling position. A drill pipe seal housing is attached to the upper end of the aligning conduit and is provided with a longitudinal opening to permit the passage of drill pipe. An annular, rotatable drill pipe seal is disposed within the drill pipe seal housing and adapted to seal around the drill pipe and the housing interior.

This invention discloses and claims some of the subject matter disclosed but not claimed in co-pending application Serial Number 468,214, filed November 12, 1954.

This invention will be more completely understood in the light of the following detailed description taken in conjunction with the accompanying drawings, in which:

Fig. 1 is a schematic elevation, partly broken away, of an underwater drilling operation being conducted from a floating vessel;

Fig. 2 is an elevation, partly in section, of the upper end of a conductor casing set in an underwater formation with a receiver assembly and a circulating head mounted thereon in sealed relationship for drilling;

Fig. 3 is a view taken on line 3—3 of Fig. 2;

Fig. 4 is a view taken on line 4—4 of Fig. 2;

Fig. 5 is a view taken on line 5—5 of Fig. 2 and rotated 90°; and

Fig. 6 is a view taken on line 6—6 of Fig. 3.

Referring to Fig. 1, a floating vessel such as a ship **20** is anchored by means of anchor lines **21** in a body of water **22** over a formation **23** in which a well **24** is to be drilled. A draw-works **25** and power unit **26**, which may be of convenitonal type, are mounted on the ship to operate a hoisting cable **27** carried over a crown block **28** located at the upper end of a mast **29**. The traveling end of the hoisting cable carries a traveling block **30** and a hook **31** which supports a swivel joint **32**. A kelly joint **33** extends downwardly from the swivel through a kelly bushing **34** in the center of a rotary table **36** mounted on gimbals in a manner such as that described in U. S. Patent 2,606,003. The rotary table is supported by a platform **38** directly over a cellar **39** which may be located in the center of the ship, as illustrated. Power is supplied to the rotary table through a shaft **40** turned by a rotary table power unit **41**.

A string of drill pipe **42** is connected to the lower end of the kelly and extends down through the cellar, the water, and into the well through a pressure circulating head **43** which is releasably sealed to a receiver assembly **44** attached to the upper end of a conductor casing or well conduit **45** (see Fig. 2) co-axially disposed within, and providing support for the upper portion of the well. A drill collar **46** and a drill bit **47** are attached to the lower end of the drill pipe for boring the well to the required depth. A plurality of outwardly and upwardly extending flukes **48** hinged on the casing serve to anchor the conduit firmly in the formation. Each fluke is provided with a chain **49** having one end attached to an intermediate portion of its respective fluke, and having the other end attached to the casing above the hinge connection. The casing may be cemented in place and the flukes omitted.

The pressure circulating head which is described below in detail with the receiver assembly is adapted to seal releasably to the receiver assembly and is also provided with a central opening through which the drill pipe is rotatably sealed. Thus, the pressure circulating head and the receiver assembly cooperate to form a seal between the rotatable drill pipe and the conduit. This permits a drilling fluid or mud **50** to be circulated from a mud tank or pit **51** in the ship by a mud pump **52** through a drilling mud hose **53** to the swivel, down through a central opening (not shown) in the kelly, drill pipe, and drill collar, out the passages in the bit, up the annular space between the drill pipe and the well wall, out a drilling mud return nipple **54** located in the circulating head, and up a flexible drilling mud return hose **55** extending from the nipple to the mud pit.

Referring to Figs 2 through 6, the receiver assembly (see Figs. 2 and 4) comprises an upright sleeve **56** to the upper end of which is welded a pair of diametrically opposed and radially extending yoke arms or guide post arms **58**. Conveniently, the guide post arms are "I" beams mounted with the flanges of the beams horizontal. The lower end of a separate upright cylindrical and hollow guide post **59** is welded inside a separate reinforcing sleeve **59A** welded in a matching notch formed at the outer end of each guide post arm. Each guide post extends from the bottom of its respective arm to a substantial distance above the arm. A solid plug **60** is welded in the upper end of each guide post so that the upper end of each plug is flush with the upper end of its respective guide post. An upright triangular plate **61** is welded to the upper surface of each plug and guide post, and is provided with a transverse bore **61A**. A separate guide line cable **62** is attached to the upper end of each guide post by means of a swivel **63** connected to a shackle **64** which is attached to its respective guide post through bore **61A**.

With the circulating head sealed to the receiver assembly, the positions of the guide cables are as shown by the solid lines in Fig. 1, i. e., each cable extends upwardly and outwardly from the casing over separate support pulleys **65** carried by the lower portions of two separate bridles **66** supported at the forward and rear portions of the ship bottom respectively. Each cable then extends downwardly and is attached to a freely hanging and adjustable weight **67**. The weights serve to maintain a constant tension on the guide cables even though the ship is raised and lowered by wave action.

When the circulating head is released and withdrawn from the receiver assembly up into the cellar, the position of the guide cables is as shown by the dotted lines of Fig. 1, i. e., each cable extends upwardly into the cellar, over its respective guide (described in detail below) attached to the circulating head, around a protective pulley or roller **68** located at the lower edge of the cellar and then along the keel of the ship to its respective supporting pulley. The position of the weights and the circulating head at the surface is also shown in dotted lines.

A pair of opposed elongated support arms **69** are attached to the sleeve under the guide post arms and extend outwardly a substantial distance from the well. The support arms span a crater **70** which is sometimes formed at the upper end of the well, and prevent the receiver assembly from sinking below the level of the ocean floor prior to the anchoring of the well conduit in its final position. A pair of reinforcing gussets **71** are welded to the support arms and the sleeve for added strength.

Three internal supporting segments **72** (see Fig. 4) are welded at 120° intervals within the upper end of the sleeve and provide support for the well conduit by engaging the respective undersides of three matching external spacing segments **72A** attached to the well conduit at a location spaced from its upper end. Prior to the permanent installation of the well conduit, e. g., in a manner such as that described in co-pending application Serial No. 477,807 filed December 27, 1954, the external and internal segments are rigidly attached to each other, e. g., by welding.

The circulating head comprises a frusto-conical shell **73** (see Fig. 2) having its upper end sealed into a well conduit seal housing **74** having an upright cylindrical wall **75**. The lower end of an annular flexible well conduit seal **76** is friction fitted into an upwardly opening annular channel **77** formed in the lower end of the well conduit seal housing between an upwardly extending ring **78** on an annular bottom closure **78A** for the housing and the housing wall. The upper end of the well conduit seal is friction fitted into a downwardly opening annular channel **79** formed in the upper end of the well conduit seal housing between a downwardly extending ring **80** on an annular upper closure **80A** for the housing and the housing wall. A sealing nipple **81** is threadably engaged through the wall well conduit seal housing so that hydraulic pressure may be applied by means of a hydraulic line (not shown) to the well conduit seal and force it to form a fluid-tight seal with the well conduit. This also provides positive gripping means by which the circulating head is held down on the well conduit. The lower end of a drilling mud conduit **82** is sealed into the upper end of the well conduit seal housing. One end of a drilling mud return nipple **83** is threaded through the drilling mud conduit wall. The other end of the nipple is connected to the flexible drilling mud return line (see Fig. 1) which extends to the vessel. Nipple **83** is provided with a conduit **84** to which there may be attached an air supply line **84A** connected to an air compressor **84B** carried by the ship (see Fig. 1). In those formations in which it is difficult to effect a good seal between the well conduit and the well wall and there is a tendency for the drilling fluid to be lost if the mud pressure within the well becomes too high, air may be injected into the mud returning to the surface to reduce its effective hydrostatic head on the mud within the well.

An aligning conduit **85** is co-axially disposed within the mud conduit so that its lower end terminates just above the upper end of the well conduit when the circulating head is in the sealed position illustrated in Fig. 3. An outwardly extending flange **86** attached to the intermediate portion of the aligning conduit is secured by means of bolts **87** to a matching outwardly extending flange **88** provided on the upper end of the mud conduit. The inside diameter of the aligning conduit is smaller than the inside diameter of the well conduit and therefore serves to guide the drill bit **47** (shown in dotted lines in Fig. 3) into the well conduit and avoid "catching" of the bit on the upper end of the well conduit as the bit is lowered into drilling position.

A drill pipe seal housing or body **90** having an outwardly turned flange **91** at its lower end is secured to an outwardly turned flange **92** at the upper end of the aligning conduit by means of bolts **93**. The external diameter of the body is less than that of the well conduit seal housing; however, the body external diameter is reduced at **94** just above the body flange. The body is provided with a relatively large first internal bore **95** which extends from

the upper end of the body down near the portion of the housing which is of reduced external diameter. The bore is then stepped down to a smaller second bore **96** for a short distance, then is stepped down to a third bore **97** for a short distance, then is stepped down to a fourth bore **98** for a short distance, then stepped up to a fifth bore **99** slightly less than that of the third bore to extend to a point near the lower end of the body, and is then stepped up to a larger sixth bore **100** which extends to the lower end of the body.

A sleeve bearing **101** which may be lignum vitae, for example, is disposed within the large bore at the upper end of the body, the lower end of the bearing resting on the shoulder formed at the end of the first bore and its upper end being flush with the upper end of the body. The inner diameter of the sleeve bearing is less than that of the second bore. The inner edge of the lower end of the annular sleeve bearing is beveled at **102** to permit water to flow up through a lubricating inlet port **103** provided in the horizontal section of the body wall above the reduced external diameter of the body. A metal insert **104** having an external diameter at its upper end slightly less than the internal diameter of the sleeve bearing is rotatably disposed within the sleeve bearing so that the upper end of the insert is below that of the bearing. An external spiral groove **105** on the insert permits water to be circulated by convection and friction up from the lubricating inlet port to keep the insert cool and lubricated during rotation.

The external diameter of the insert is stepped down to a reduced diameter at the same location where the first bore of the body is stepped down to a reduced diameter. This forms an external shoulder **106** on the insert which rests on a thrust ring bearing **107** carried in the shoulder formed between the third and the fourth bores of the body. The upper end of the insert is internally threaded at **108** to receive a threaded bushing **109** which has an annular external groove **110** near its upper end and an outwardly turned flange **111** which rests on the upper edge of the insert. An O ring **112** in the annular groove effects a fluid tight seal between the bushing and the insert.

The insert is provided with a relatively large internal first bore **113** at its upper end which tapers to a reduced second bore **114** near its intermediate portion, then tapers again to a reduced third bore **115** in its lower portion, tapers again to a reduced fourth bore **116** and then steps out to an increased fifth bore **117** to provide a lifting shoulder **118** on which there is disposed a cushion ring **119** which may be made of heavy rubber. An upper thrust ring bearing **120**, which may be of Micarta (a phenolic plastic), is disposed on the upper end of the bushing and supports a retaining ring **121** provided with a pair of diametrically opposed slots **122** in its periphery, each slot being adapted to receive a longitudinally movable locking pin **123**. A fastening ring **124** is disposed on top of the upper ends of the sleeve bearing and the body wall and is rigidly attached to the body wall by means of bolts **125**. The inner periphery of the underside of the fastening ring is provided with a groove **126** which communicates with an annular space **127** formed between the upper thrust ring bearing, the upper end of the bushing, the fastening ring and the sleeve bearing. A plurality of vertical lubricating outlet ports **128** in the fastening ring connect with the groove **126** and permit the lubricating water to flow from the interior of the body **90**.

A pair of horizontal bores **129** (see Fig. 6) through the fastening ring house of the locking pins. The bores are of reduced diameter at their outer ends to form a shoulder **130**. A compression spring **131** is co-axially disposed around each locking pin and bears against a flange **132** attached to the inner end of each locking pin and bears against the shoulder of the locking pin bores. The outer ends of the locking pins extend out beyond the

fastening ring and are each provided with a transverse pin **133** which holds a stop collar **134** around the outer end of each locking pin. A ring handle **135** is welded to the outer end of each stop collar to facilitate its operation.

An annular flexible drill pipe seal **136** is co-axially disposed within the insert and is supported at its upper end by a plurality of metal "eyes" **137** molded into the seal and held by corresponding hooks **138** formed integrally on a seal ring **139** secured to the underside of the bushing by means of bolts **140**. The drill pipe seal has a relatively large first bore **141** at its upper end and tapers to a reduced second bore **142** at its lower end, and is sufficiently flexible to be expandable to a large enough diameter to permit the passage of drill pipe and drill collars. However, under ordinary drilling operations, the seal clamps tightly around the drill pipe or drill pipe joints so as to rotate with the pipe and effect a fluid type seal.

An insert seal **143** is disposed in the annular space formed between the lower end of the insert **104** and the fifth internal bore **99** of the body. The insert seal is held up in position by means of an insert seal retaining ring **144** secured by means of bolts **145** to the shoulder formed between the fifth and sixth internal bores of the body.

Referring to Fig. 2, an upper pair of diametrically opposed and radially extending guide brackets **147** (preferably short sections of relatively small "I" beams) are welded to the external surface of the aligning conduit on the circulating head. The upper end of a separate guide sleeve **148** is attached to the outer end of each upper guide bracket by means of a pair of vertical, spaced plates **148A** which are welded at one end to the sleeve and arranged at the other end to fit on each side of the guide bracket and are attached thereto by means of bolts **149**. The upper end of each guide sleeve is provided with a hollow inverted frusto-conical projection **150** to facilitate raising the circulating head. A grooved pulley wheel **150A** is mounted to rotate about a horizontal axis at the outer edge of each projection and extend slightly about the projection so as to receive the guide lines as the circulating head is raised and lowered.

A similar pair of lower guide brackets **151** are attached to the external surface of the drilling mud conduit by two pairs of parallel plates **152**. The lower end of each guide sleeve is attached to the outer end of each lower guide bracket and a separate upright hollow frusto-conical projection **153** is attached to the lower end of each guide sleeve to facilitate lowering of the circulating head. The guide sleeves are adapted to slip on and off of the guide post and accurately align the circulating head on the receiver assembly. Since the well conduit seal housing is considerably heavier than the remaining element of the circulating head, the center of gravity of the circulating head is below the part of the guide sleeves which normally first contact the guide posts as the circulating head is lowered. This is sometimes important for a reason explained below.

Within the well conduit and the receiver assembly anchored in the formation, and the upper end of the guide cables suspended over the supporting pulleys carried by the floating vessel, as indicated schematically in Fig. 1, the operation of the circulating head and receiver assembly illustrated in Figs. 1 through 6 is as follows: The circulating head is suspended underneath the rotary drilling table by suitable hooks (not shown) and the locking pins are pulled out so that the annular seal means comprising the retaining ring, the insert and its associated parts can be removed from the interior of the circulating head body. The drill collars are then lowered until the lower end of the drill collars project below the circulating head. The drill bit is screwed onto the lower end of the drill collars, and the insert and retaining ring are slipped down over the drill collars into position with the circulating head

body. The locking pins are allowed to move inwardly and lock the retaining ring in position.

The circulating head is then lowered until the internal cushion ring **119** seats on the upper edge of the drill bit (shown in dotted lines in Fig. 3). Thus, the lower portion of the circulating head shrouds the bit. The drill collars, drill bit and circulating head are lowered as additional drill collars and drill pipe are coupled above the drill collars. When sufficient drill pipe is coupled so that the total length of drill pipe and drill collars approximates the water depth in which the vessel is floating, the sleeves on the guide brackets slip down over the guide posts and insure accurate alignment of the circulating head and the receiver assembly thus preventing the heavy load of drill bit, collars and drill pipe from directly contacting the receiver assembly or the guide posts. This prevents inadvertent damage to these latter elements due to the motion of the ship in the water. Hydraulic pressure is then applied from the surface to the well conduit seal through the pressure nipple in the well conduit seal housing to lock and seal the circulating head to the receiver assembly. Additional drill pipe is coupled at the surface until the drill bit nears the bottom of the well. If the ship should be set over from directly above the well due to wind or ocean currents, the circulating head will approach the guide posts at an angle. However the circulating head will right itself because the center of gravity of the circulating head is below the point of first contact between the guide sleeves and the guide posts. Thus the circulating head can easily be slipped into sealing position even though the ship is not directly over the well.

The kelly joint is then coupled to the upper end of the drill pipe and the rotary table is turned to rotate the bit. The hoisting cable is used to control bit pressure in the well. Mud is circulated down the drill pipe, out the drill bit, up the annular space between the drill pipe and the well, out the mud return nipple, and up the mud return hose for recirculating. The hydraulic pressure applied to the well conduit seal is between 500 and 600 pounds per square inch in excess of the drilling mud pressure adjacent the well conduit seal. This not only prevents leakage of the drilling mud but provides a positive grip for the circulating head on the receiver unit and prevents the circulating head from being blown upwardly by the drilling mud pressure. The drill pipe seal maintains a fluid type seal between the drill pipe seal housing and the rotating drill pipe. The insert within the drill pipe seal housing rotates during the drilling operation and is cooled by the circulating of water up the spiral groove and around the exterior of the insert. The water is drawn in the lubricating inlet port by both convection and frictional forces, passes up the spiral groove, and leaves the circulating head through the lubricating water exit ports.

When the drill pipe is to be withdrawn from the well, for example, to change the bit, circulation of the drilling mud is stopped and the hydraulic pressure on the well conduit seal is released. The drill pipe is then raised by the hoisting cable and draw works until the drill bit engages the internal cushion ring **119** on the insert and raises the circulating head to the surface. Re-entry of the equipment into the well bore is easily accomplished in the manner previously described.

The drilling is then carried to the required depth, additional casing being set within the original surface conduit as required. A receiving assembly similar to that described above may be used at the upper end of each additional string of casing used, and conventional blow-out preventers may be employed for safety.

We claim:

1. In apparatus for drilling a well in a formation underlying water in which drilling fluid is pumped down the interior of a drill pipe and up the annular space between the drill pipe and the well, the combination comprising an upright well conduit anchored in the well, two spaced outwardly extending guide post arms attached to the well conduit, a separate upwardly extending guide post attached to the outer portion of each guide post arm, a separate upwardly extending guide line attached to each guide post, an inverted aligning funnel adapted to slide on and off the upper end of the well conduit, two spaced outwardly extending guide brackets attached to the aligning funnel, a separate guide sleeve on the outer portion of each guide bracket adapted to slide up and down the guide lines and on and off the guide posts, an upright well conduit seal housing having an upright central opening to permit the well conduit seal housing to slide on and off the upper end of the well conduit, the well conduit seal housing being aligned co-linearly with and connected to the upper end of the aligning funnel, an annular flexible well conduit seal attached to the interior of the well conduit seal housing and arranged to fit around the well conduit, means for applying fluid pressure between the seal and the housing, a drilling mud conduit of larger internal diameter than the well conduit attached to and extending co-linearly upwardly from the well conduit seal housing, the mud conduit having a drilling mud outlet, an upwardly extending aligning conduit of smaller internal diameter than the well conduit sealed co-linearly in the upper end of the mud conduit for guiding a drill bit into the well conduit, a drill pipe seal housing attached to the upper end of the aligning conduit and having a longitudinal opening to permit the passage of drill pipe, an annular bearing mounted within said housing, a drill pipe seal rotatably mounted within the bearing and adapted to seal around the drill pipe.

2. In apparatus for drilling a well in a formation underlying water in which drilling fluid is pumped down the interior of a drill pipe and up the annular space between the drill pipe and the well, the combination comprising an upright well conduit anchored in the well, two spaced outwardly extending guide post arms attached to the well conduit, a separate upwardly extending guide post attached to the outer portion of each guide post arm, a separate upwardly extending guide line attached to each guide post, an inverted aligning funnel adapted to slide on and off the upper end of the well conduit, two spaced outwardly extending guide brackets attached to the aligning funnel, a separate guide sleeve on the outer portion of each guide bracket adapted to slide up and down the guide lines and on and off the guide posts, an upright well conduit seal housing having an upright central opening to permit the well conduit seal housing to slide on and off the upper end of the well conduit, the well conduit seal housing being aligned co-linearly with and connected to the upper end of the aligning funnel, an annular flexible well conduit seal attached to the interior of the well conduit seal housing and arranged to fit around the well conduit, means for applying fluid pressure between the seal and the housing, a drilling mud conduit of larger internal diameter than the well conduit attached to and extending co-linearly upwardly from the well conduit seal housing, the mud conduit having a drilling mud outlet, an upwardly extending aligning conduit of smaller internal diameter than the well conduit sealed co-linearly in the upper end of the mud conduit for guiding the drill bit into the well conduit, a drill pipe seal housing attached to the upper end of the aligning conduit and having a longitudinal opening to permit the passage of drill pipe, an annular bearing mounted within said housing, a drill pipe seal rotatably mounted within the bearing and adapted to seal around the drill pipe.

3. In apparatus for drilling a well in a formation underlying water in which drilling fluid is pumped down the interior of a drill pipe and up the annular space between the drill pipe and the well, the combination comprising an upright well conduit anchored in the well, a sleeve disposed around and attached to the upper portion of the well conduit, two spaced outwardly extending guide post arms attached to the sleeve, a separate upwardly extending guide post attached to the outer portion of each guide post

arm, a separate upwardly extending guide line attached to each guide post, an inverted aligning funnel adapted to slide on and off the upper end of the well conduit, two spaced outwardly extending guide brackets attached to the aligning funnel, a separate guide sleeve on the outer portion of each guide bracket adapted to slide up and down the guide lines and on and off the guide posts, an upright well conduit seal housing having an upright central opening to permit the well conduit seal housing to slide on and off the upper end of the well conduit, the well conduit seal housing being aligned co-linearly with and connected to the upper end of the aligning funnel, an annular flexible well conduit seal attached to the interior of the well conduit seal housing and arranged to fit around the well conduit, means for applying fluid pressure between the seal and the housing, a drilling mud conduit of larger internal diameter than the well conduit attached to and extending co-linearly upwardly from the well conduit seal housing, the mud conduit having a drilling mud outlet, an upwardly extending aligning conduit of smaller internal diameter than the well conduit sealed co-linearly in the upper end of the mud conduit for guiding a drill bit into the well conduit, a drill pipe seal housing attached to the upper end of the aligning conduit and having a longitudinal opening to permit the passage of drill pipe, an annular bearing mounted within said housing, a drill pipe seal rotatably mounted within the bearing and adapted to seal around the drill pipe.

4. In apparatus for drilling a well in a formation underlying a water body, the combination comprising a floating vessel, an upright well conduit anchored in the well and projecting above the bottom of the water body, flexible guide means held to the bottom by the conduit and extending to the vessel, a circulating head having a bore through which a string of pipe may be passed, means operable from the vessel to raise and lower the head, means actuated from the vessel for releasably sealing the head to the conduit, means in the head for sealing around a pipe string rotatably extending therethrough into the conduit so that the inside of the conduit is sealed from the water body when the head is sealed to the conduit and around a pipe string, and bracket means engaging the circulating head with the guide means and in fixed orientation in respect thereto so that as the head is lowered from the vessel it is constrained by the guide means to register with the upper end of the conduit.

5. Apparatus for carrying out operations such as drilling and working in a hole in a formation underlying a body of water comprising in combination a floating vessel, tension means for anchoring the vessel, a receiver assembly adapted to rest on the formation having a well conduit extending into the hole to anchor the receiver assembly to the formation, a laterally flexible elongated guide means fastened to the receiver assembly and extending between the receiver assembly and vessel so as to permit lateral displacement of the vessel during drilling, a drill string supported at and depending from the vessel, a drilling tool supported on the lower end of the drill string, a circulating head slidably mounted on the drill string, connecting means interconnecting the circulating head and guide means so that as the circulating head is lowered with the drill string it is constrained by the guide means to register with the well conduit and automatically cause the drilling tool as the drill string is further lowered to enter the well conduit, means for rotatably sealing the circulating head around the drill string, means on the vessel for pumping drilling fluid down the drill string, a return conduit connected from the circulating head to the vessel and spaced from the drill string for return flow of drilling fluid to the vessel, and means in the circulating head providing fluid communication between the well conduit and return conduit.

6. Apparatus for carrying out operations such as drilling and working in a hole in a formation underlying a body of water comprising in combination a floating vessel, tension means for anchoring the vessel, a receiver assembly adapted to rest on the formation having, an upright well conduit extending into the formation at the upper end of the hole, the conduit projecting a short distance from the upper end of the hole, a pressure circulating head adapted to be fastened to the upper end of the conduit and to form a fluid-tight seal therewith, the circulating head having a bore therethrough, a drill string supported at and depending from the vessel through the circulating head, laterally flexible elongated guide means fastened to the receiver assembly and extending between the receiver assembly and the vessel, bracket means affixed to the circulating head and interconnected to the guide means so that when the circulating head is lowered from the vessel at the end of the drill string it is constrained by the guide means to register with the upper end of the conduit and cause the drill string as it is further lowered to enter the well conduit, means for rotatably sealing the circulating head around the drill string forming a fluid passage between the well conduit upwardly in the circulating head, an outlet means in the circulating head for drilling fluid flowing upwardly into the circulating head from the annular space between the drill string and the well conduit, and conduit means connected between the outlet means in the circulating head and the vessel independently of the drill string for returning drilling fluid from the circulating head to the vessel.

7. Apparatus for carrying out operations such as drilling and working in a hole in a formation underlying a body of water comprising in combination a floating vessel, tension means for anchoring the vessel, a receiver assembly having an upright conduit extending downwardly into the formation to anchor the receiver assembly to the formation to define the upper end of the hole and to project a short distance from the upper end of the hole, a pressure circulating head adapted to lock releasably to the upper end of the conduit and form a fluid-tight seal therewith, the circulating head having a passageway therethrough coaxial with the conduit when connected thereto, a drill string supported at and extending from the vessel through the circulating head, seal means within the circulating head to form a fluid-tight seal around the drill string permitting longitudinal and rotary motion of the drill string, an outlet means for drilling fluid from the circulating head, conduit means connected between the outlet means and the vessel and independently of the drill string for flow of drilling fluid from the circulating head to the vessel, and flexible guide means connected between the receiver assembly and the vessel for engaging and guiding the circulating head into engagement with the conduit as the head is lowered from the vessel.

8. A circulating head for connection underwater to a well conduit having upwardly extending first guide means, the circulating head enabling circulation of drilling fluid introduced into the well through a drill pipe which passes through the circulating head, said circulating head comprising a body having a passageway through which said drill pipe passes, a first sealing means supported by the body for sealing the circulating head to the well conduit to place the passageway in fluid communication with the conduit, a second sealing means supported by the body to seal around the drill pipe positioned in the passageway, the first and second sealing means defining a drilling fluid chamber in the passageway communicating with the well conduit for receiving drilling fluid from the well, outlet means for withdrawing drilling fluid from the chamber, and second guide means attached to the body for guiding connection with the first guide means.

9. A circulating head as defined in claim 8 and wherein said second guide means includes a frusto-conical shell connected to the lower end of said body for guiding engagement with said well conduit.

10. A circulating head as defined in claim 8 and wherein said drill pipe has a drill bit on its lower end and

said passageway is of sufficient size to house and enshroud the bit to prevent contact of the bit with the well conduit when the circulating head is guided into connection with the well conduit.

11. A circulating head as defined in claim 10 and wherein said circulating head includes means adapted to coact with said bit to suspend the circulating head from the bit.

12. A circulating head as defined in claim 8 and wherein said second guide means is attached to said body above the center of gravity of said body.

13. A circulating head as defined in claim 8 and wherein said body includes an annular bearing and said second sealing means includes an annular drill pipe seal rotatably mounted in said bearing.

14. A circulating head as defined in claim 8 and including means connected in fluid communication with said outlet means for introducing thereto a fluid of a density less than that of the drilling fluid.

15. A circulating head as defined in claim 8 and wherein said body includes an aligning conduit extending through at least a portion of said passageway between said first and second sealing means to guide the drill pipe from the second sealing means through the body to the well conduit.

16. In apparatus for drilling a well with a drill pipe and bit in a formation underlying water, the combination comprising a well conduit anchored uprightly in the formation to form the upper end of the well, an upwardly extending guide member connected to the well conduit and extending upwardly beyond the upper end of the well conduit, a circulating head comprising a body having a straight passageway therethrough, one end of the body forming a first housing adapted to engage the upper end of the well conduit to place said passageway in substantially co-axial fluid communication with the well conduit, first sealing means supported by the first housing and forming a substantially fluid tight seal between the first housing and the well conduit, another portion of the body forming a second housing, second sealing means supported by the second housing to form a substantially fluid tight seal between the body and a drill pipe positioned in the passageway, fluid outlet means opening through the body into the passageway between the first and second seals, and a bracket having one end attached to the body and means on the other end adapted to engage the guide means to guide the circulating head as it is lowered through the water into engagement with the well conduit.

17. Apparatus according to claim 16 wherein the circulating head is provided with a frusto-conical shell connected to the lower end of said body for guiding engagement with said well conduit.

18. Apparatus according to claim 16 wherein said second sealing means includes an annular bearing mounted in said second housing and an annular rotatable drill pipe seal rotatably held within the bearing and arranged to seal around the drill pipe.

19. Apparatus according to claim 16 wherein said first sealing means is enclosed within said first housing and the housing includes means operable through a wall

thereof to actuate said first sealing means for engagement and disengagement with said conduit.

20. Apparatus according to claim 16 wherein said body includes an aligning conduit extending through at least the portion of said passageway between said second and first sealing means and co-axially with the well conduit to guide the drill pipe from the second sealing means through the body to the well conduit.

21. Apparatus according to claim 16 wherein said passageway in the circulating head is of such size as to house and enshroud said bit to prevent contact of the bit with the well conduit when the circulating head is guided into connection with the well conduit.

22. A circulating head adapted to be lowered through water and connected to a well conduit positioned in an underwater formation, the circulating head enabling circulation of drilling fluid introduced into the well through a drill pipe and its depending drill bit, said circulating head comprising a body having a passageway through which said drill pipe passes, a first sealing means supported by the body and including means for sealing the circulating head to the well conduit to place the passageway in fluid communication with the well conduit, a second sealing means including an annular bearing mounted in the body and an annular seal means rotatably mounted in said bearing, said annular seal means having an annular flexible drill pipe seal adapted to conform to and seal around a drill pipe positioned in the passageway, the first and second sealing means defining a drilling fluid chamber in the passageway communicating with the well conduit for receiving drilling fluid from the well, outlet means for withdrawing drilling fluid from the chamber, locking means mounted on said body and releasably engaged with said annular seal means to releasably retain said annular seal means within said body, said locking means being adapted for operation from a vessel to release said annular seal means from said body, said annular seal means including means adapted to coact with the drill string and bit to enable suspension thereby, the body providing a housing for the bit to prevent contact of the bit with the well conduit when the circulating head is lowered into connection with the well conduit.

23. A circulating head according to claim 22 wherein said second sealing means includes an insert seal fixedly mounted in said body and sealingly engaging said annular seal means.

References Cited in the file of this patent

UNITED STATES PATENTS

631,423	Fauck	Aug. 22, 1899
1,598,439	Hansen	Aug. 31, 1926
1,639,852	King	Aug. 23, 1927
1,668,559	Hansen	May 8, 1928
2,026,879	Ferguson	Jan. 7, 1936
2,125,762	Wheeler	Aug. 2, 1938
2,171,672	Plummer	Sept. 5, 1939
2,262,490	Crake	Nov. 11, 1941
2,512,783	Tucker	June 27, 1950
2,562,946	Read	Aug. 7, 1951