No. 659,939. Patented Oct. 16, 1900.

W. F. STIMPSON.

SCALE.

(Application filed Dec. 18, 1899.)

(No Model.)

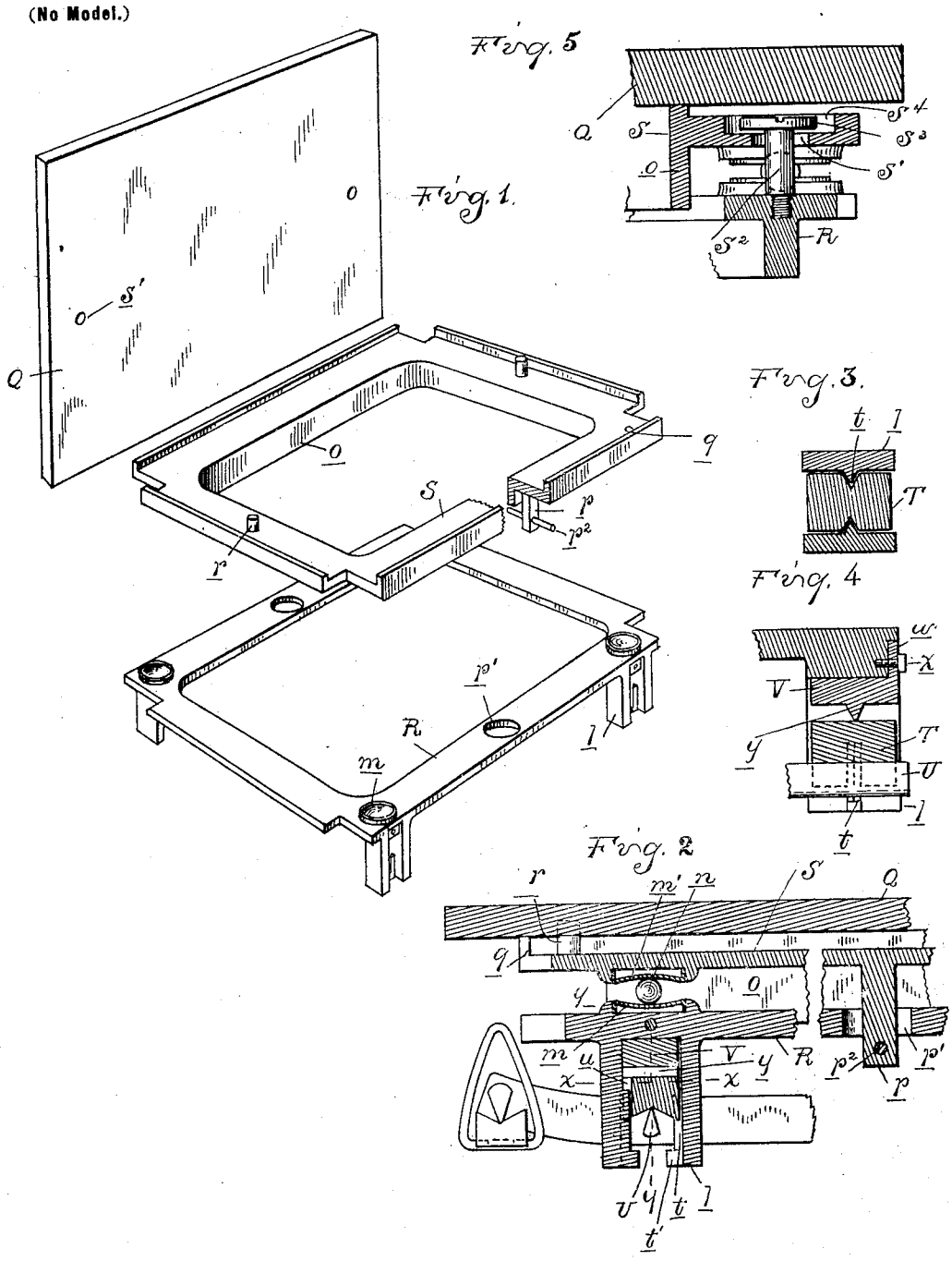

Witnesses
H. C. Smith.
M. B. Dogherty.

Inventor
Walter F. Stimpson
By Mc Gregor & Son
Attys.

THE NORRIS PETERS CO., PHOTO-LITHO., WASHINGTON, D. C.

UNITED STATES PATENT OFFICE.

WALTER F. STIMPSON, OF DETROIT, MICHIGAN.

SCALE.

SPECIFICATION forming part of Letters Patent No. 659,939, dated October 16, 1900.

Application filed December 18, 1899. Serial No. 740,677. (No model.)

To all whom it may concern:

Be it known that I, WALTER F. STIMPSON, a citizen of the United States, residing at Detroit, in the county of Wayne and State of Michigan, have invented certain new and useful Improvements in Scales, of which the following is a specification, reference being had therein to the accompanying drawings.

The invention relates more particularly to the construction of the base or platform portion of the scale; and it consists in the peculiar construction of a platform-supporting base intermediate the platform and levers; further, in the construction of the bearings, and, further, in the peculiar construction, arrangement, and combination of parts, as more fully hereinafter described and claimed.

In the drawings, Figure 1 is a perspective view of the platform and the two members comprising the platform-supporting base detached. Fig. 2 is a longitudinal section of a portion of said platform and supporting-base as assembled. Fig. 3 is a section on line $x\,x$, Fig. 2. Fig. 4 is a section on line $y\,y$, Fig. 2; and Fig. 5 is a cross-section through the platform and base, showing a modified construction.

As my improvements are applicable to any form of platform-scale, I have deemed it unnecessary to illustrate the general construction of the scale or to show fully the construction and arrangement of the platform-levers. In Fig. 2 I show a fragment of one of the platform-levers, which is provided with a knife-edge bearing-pin U, forming one of the platform-supporting bearings.

Q is the platform proper. Intermediate this platform and the bearing U is a platform-supporting base, which is of the following construction:

R is a subbase consisting of an annular frame having depending legs l for the lever-bearings. At a number of points on the frame, preferably at the four corners, are arranged concave bearings m, in which balls n are placed. Above the frame R is a second annular frame S, which has corresponding concave bearings m' formed on the under face, adapted to rest upon the balls n. The inner edge of this annular frame is preferably provided with a depending flange o, which projects below the top of and within the frame R and serves to limit the lateral movement of the frame S upon the ball-bearing. To hold the frames S and R together without interfering with the limited independent lateral movement thereof, the former is provided with depending lugs or pins p, which pass through apertures p' in the frame R and are provided with the transversely-extending detachable pins p^2, which project beyond the edges of the aperture p' and serve to hold the two frames together. The frame S is also provided upon its upper face, and preferably at the outer edges thereof, with the upward-extending flanges q, which serve to support the platform proper, Q. This platform simply rests upon the frame S and is held from lateral movement by pins r on the frame S engaging with recesses s' in the platform Q. The concave bearings m and m' may be formed integral with the frames R and S; but I preferably employ detachable cups, as shown in Fig. 5, which may be engaged with suitable socket-bearings upon the frames.

The depending legs l upon the frame R are preferably bifurcated to embrace the bearing-blocks T, which rest upon knife-edge bearings U on the platform-levers. These bearing-blocks are preferably formed of agate, and in order to secure them in position without the necessity of drilling holes for securing-pins I preferably employ the following construction:

t represents ribs formed on the inner faces of the bifurcations of the legs l. These ribs extend upwardly from the lower ends of the legs, but are cut away a sufficient distance from the top of the recess between the bifurcations to permit of introducing the block T laterally therein. The block T is provided with corresponding grooves u, with which the ribs t loosely engage, sufficient play being left to allow of the bearing-blocks adjusting themselves to the bearings U. At the lower ends of the legs are the lugs or projections l', adapted to prevent the blocks from slipping down out of engagement with the ribs t.

V is a detachable block adapted to fit in the recesses above the bearing-blocks T and having a side flange w, adapted to be secured by a bolt or screw x to the frame R.

With the construction just described, in securing the blocks T in position the blocks

V are removed and the blocks T inserted laterally into the upper end of the recess, engaged with the ribs *t*, and then slid downward a sufficient distance to allow the block V to be again inserted in the recess. The blocks T will then be held from disengagement from the legs *l* and at the same time will be free to adjust themselves to a proper bearing upon the bearings U. To facilitate this adjustment, the bearing *y* on the block V for the block T is a V-shaped rib and extends transversely of the pivot U, as shown in Fig. 8. Thus the block T is free to rock upon the bearings *y* into perfect contact with the bearings U.

The construction of the platform-supporting frame in two sections having ball-bearings between does away with the necessity of check-rods and also permits of different platforms being used with same supporting-frame. The construction of the bearings also facilitates the easy assemblage of parts, cheapens the cost of manufacture, and allows the blocks to freely adjust themselves to the knife-edge bearings.

In Fig. 5 I show a slightly-modified construction of platform-supporting frame, which I deem preferable to the construction shown in Figs. 1 and 2. In this the frame S is apertured at S′, and a headed bolt S^2 passes through the aperture and engages with a threaded socket in the frame R. The head S^3 of the bolt S^2 is larger than the aperture S′ and is located in a countersink or recess S^4 in the upper face of the frame. Thus the two frames S and R are held together, while at the same time the latter is free to move laterally by reason of the placing of the pins S^2 in the aperture S′.

What I claim as my invention is—

1. A scale-bearing, comprising a bearing-block, a member having a recess into which said block is adapted to be laterally inserted lateral retaining means with which said block is adapted to be engaged by a vertical movement within said recess, and a block detachably secured within said recess adapted to hold said bearing-block in its working position in engagement with said lateral retaining means.

2. A scale-bearing, comprising a block horizontally grooved to form a bearing for the knife-edge pivot and vertically grooved upon opposite sides, a member having a recess into which said block is adapted to be laterally inserted, vertical ribs upon said member adapted to be loosely engaged with said vertical grooves in said block by a vertical movement of the latter within said recess, and a second block detachably secured within said recess having a V-shaped bearing-ridge for said first-mentioned block retaining the same in engagement with said ribs and extending at right angles to said knife-edge bearing.

3. In a scale, the combination with a platform of a supporting-frame therefor, comprising a lower section having bearings resting upon the platform-levers, and an upper section said sections having corresponding concave sockets formed on the adjacent faces thereof, balls in said sockets and retaining devices for holding said sections together permitting of a limited free lateral movement thereof.

4. In a scale, the combination with a platform, of supporting-base therefor comprising a lower section having bearings for resting on the platform-levers, and an upper section having a retaining connection with said lower section permitting of a limited free lateral movement of the former in relation to the latter.

5. In a scale, the combination with the platform of a supporting-frame therefor comprising a lower section having bearings for resting on the platform-levers, an upper section, balls between said sections, and a connection between said sections consisting of a headed pin secured to one section passing through an aperture in the opposite section, the head of said pin being larger than said aperture and located in a countersink in the aperture-frame.

6. In a scale, a platform-supporting frame comprising an upper and a lower member having cylindrical sockets formed in their adjacent faces, concave cups having cylindrical flanges fitting in said cylindrical sockets, and balls between said members having bearings in said cups.

In testimony whereof I affix my signature in presence of two witnesses.

WALTER F. STIMPSON.

Witnesses:
M. B. O'DOGHERTY,
H. C. SMITH.