Nov. 26, 1957 D. J. NEALE, SR 2,814,396

PORTABLE CRANE FOR HANDLING AND SETTING POLES

Filed Feb. 21, 1955 4 Sheets-Sheet 1

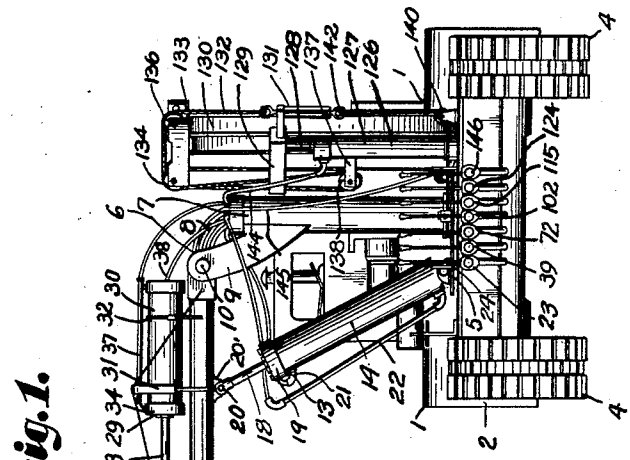

Fig. 1.

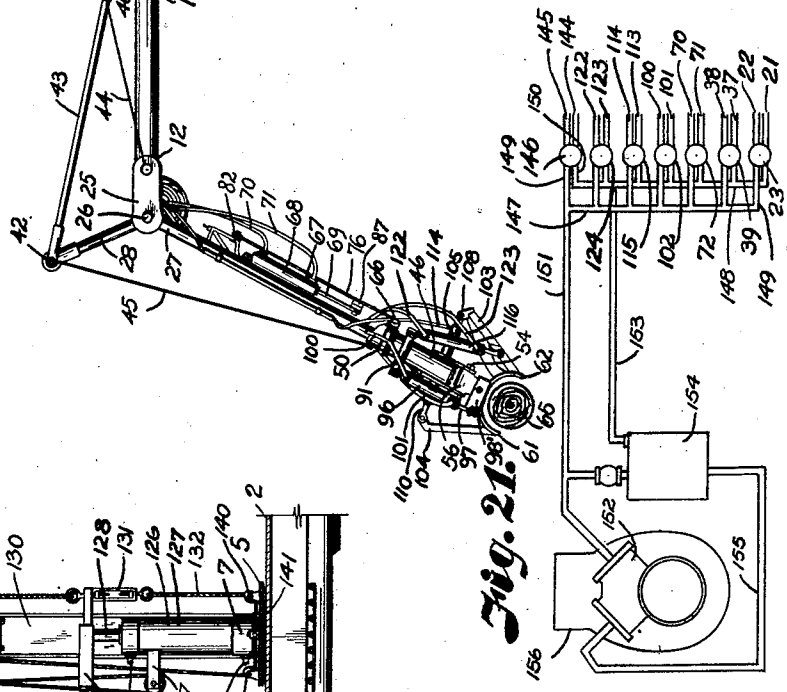

Fig. 2.

Fig. 3.

INVENTOR.
Dory J. Neale Sr.

BY
Fishburn & Mullendore
ATTORNEYS.

Nov. 26, 1957 D. J. NEALE, SR 2,814,396

PORTABLE CRANE FOR HANDLING AND SETTING POLES

Filed Feb. 21, 1955 4 Sheets-Sheet 2

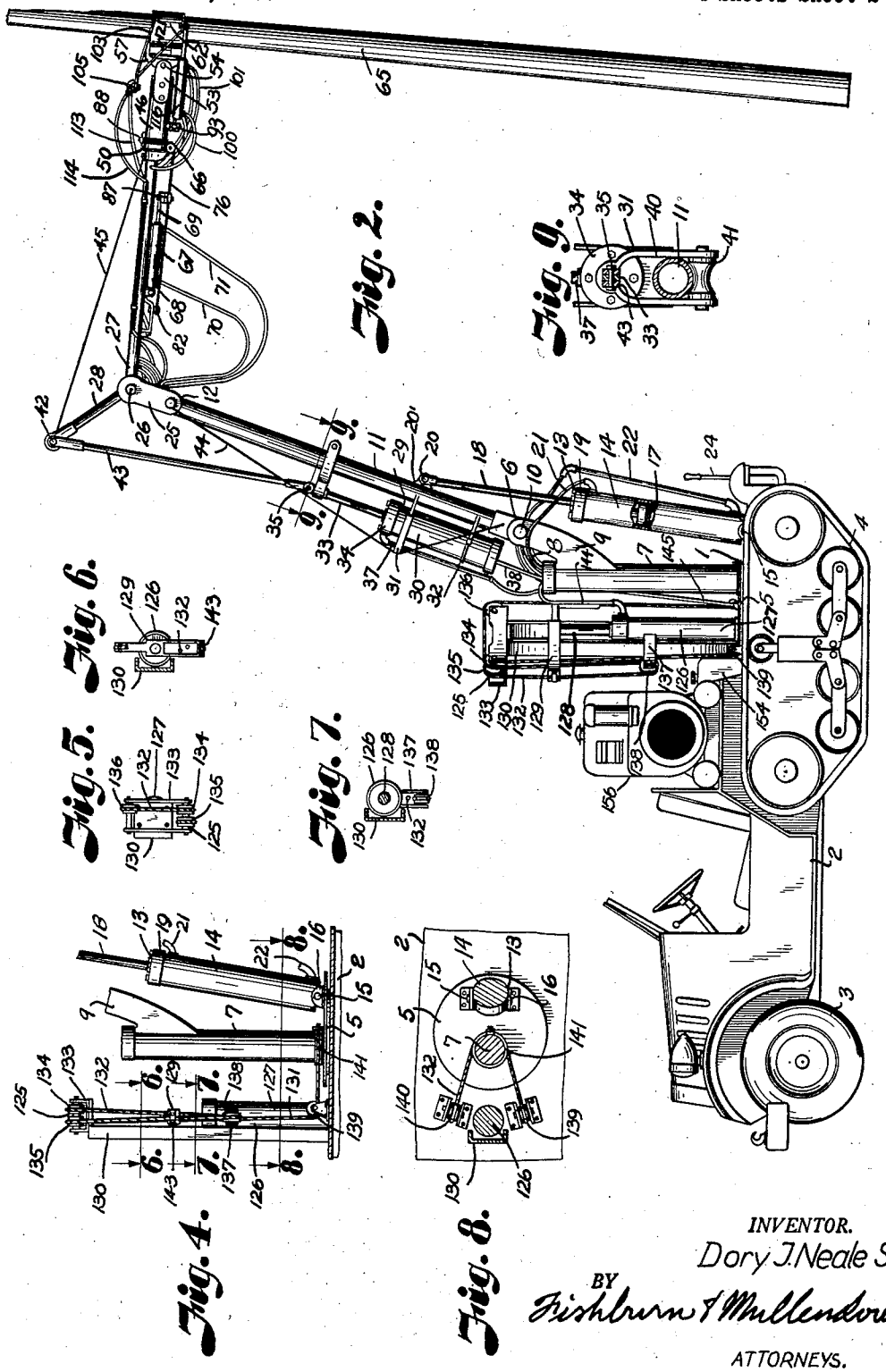

Fig. 2.

Fig. 9.

Fig. 6.

Fig. 5.

Fig. 7.

Fig. 4.

Fig. 8.

INVENTOR.
Dory J. Neale Sr.
BY
Fishburn & Mullendore
ATTORNEYS.

Nov. 26, 1957 D. J. NEALE, SR 2,814,396

PORTABLE CRANE FOR HANDLING AND SETTING POLES

Filed Feb. 21, 1955 4 Sheets-Sheet 3

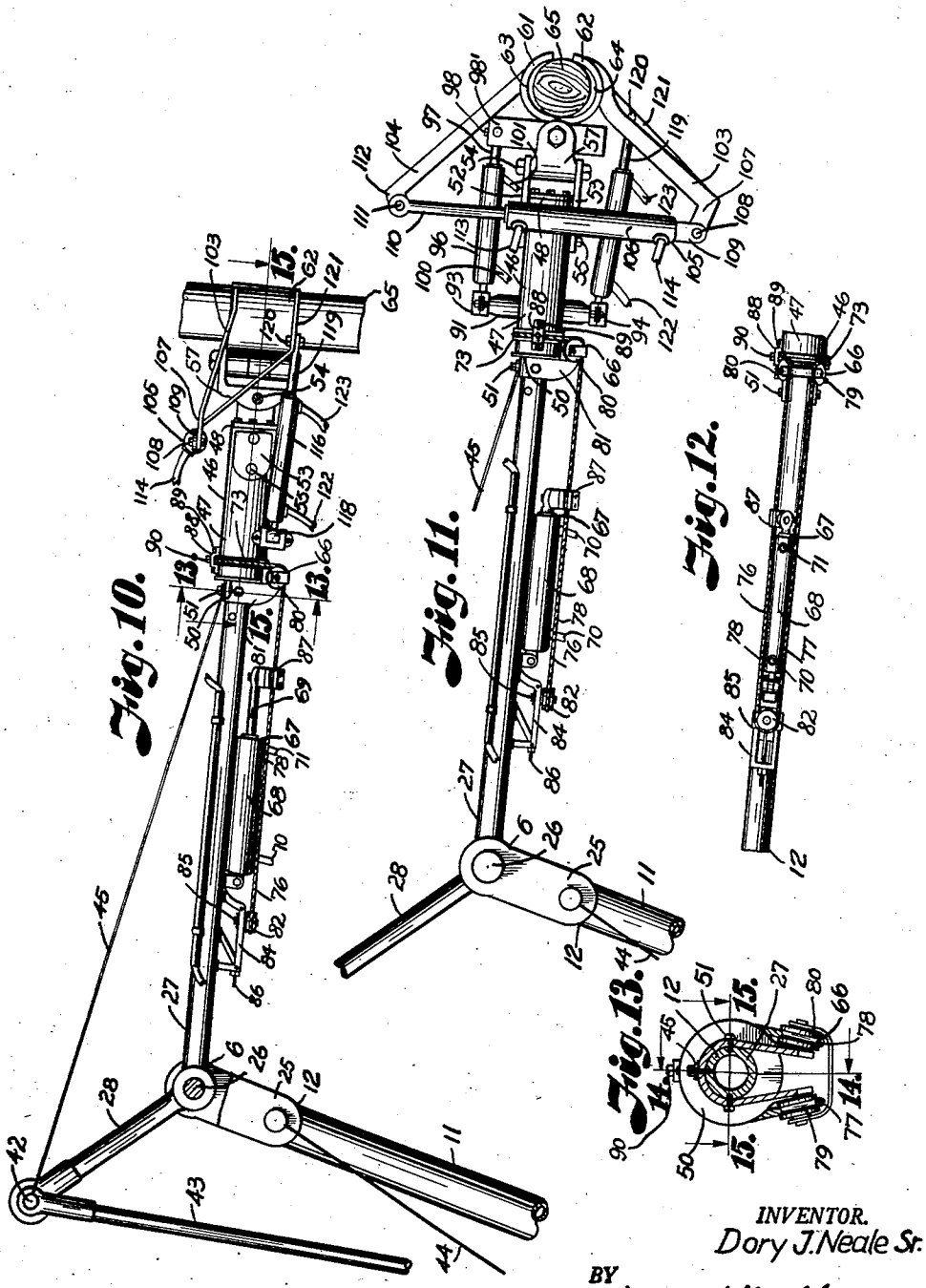

INVENTOR.
Dory J. Neale Sr.

BY
Fishburn & Mullendore
ATTORNEYS.

Nov. 26, 1957 D. J. NEALE, SR 2,814,396

PORTABLE CRANE FOR HANDLING AND SETTING POLES

Filed Feb. 21, 1955 4 Sheets-Sheet 4

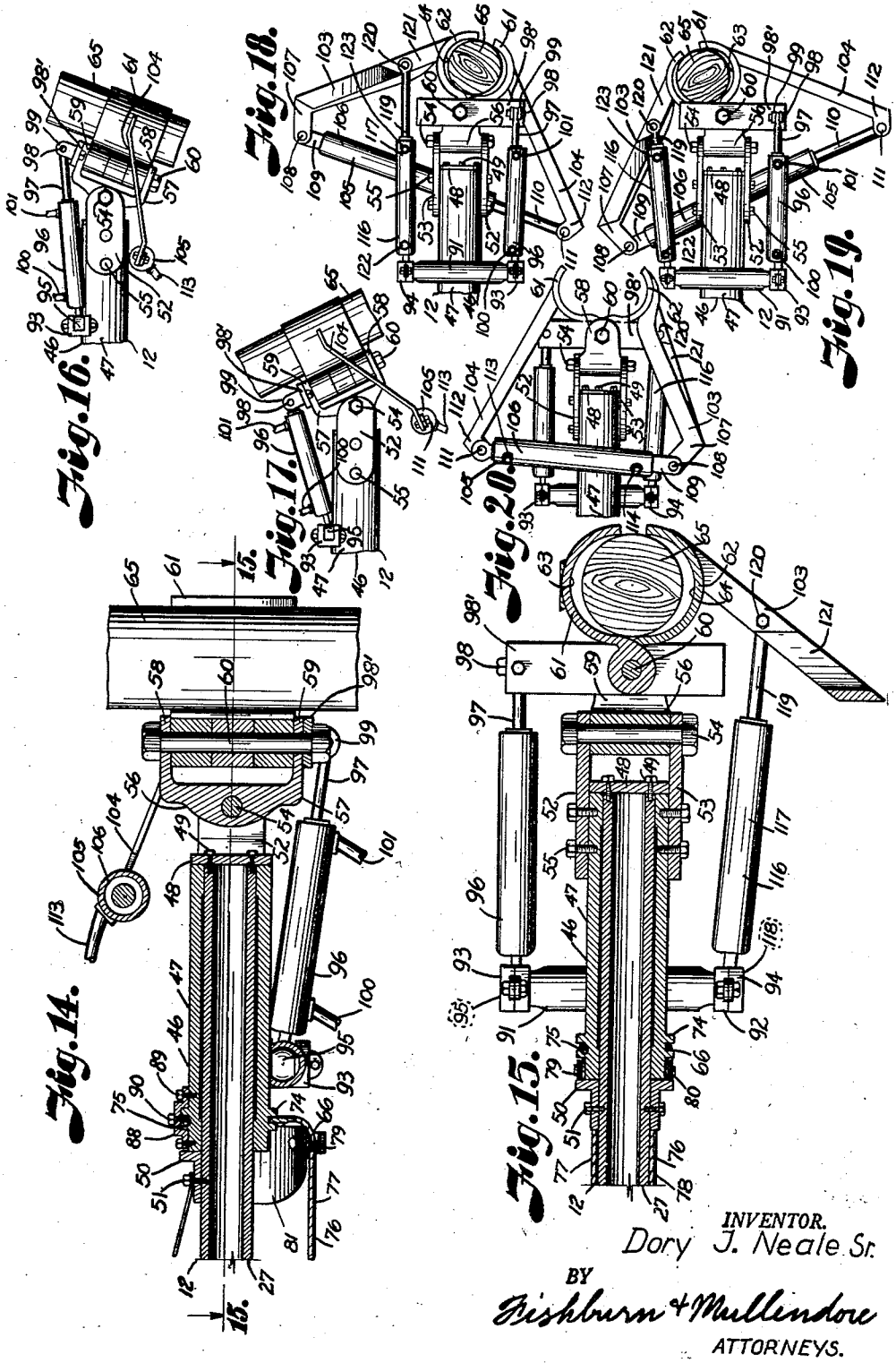

Fig. 16.

Fig. 18.

Fig. 19.

Fig. 17.

Fig. 20.

Fig. 14.

Fig. 15.

INVENTOR.
Dory J. Neale Sr.
BY
Fishburn & Mullendore
ATTORNEYS.

United States Patent Office 2,814,396 Patented Nov. 26, 1957

2,814,396

PORTABLE CRANE FOR HANDLING AND SETTING POLES

Dory J. Neale, Sr., Topeka, Kans.

Application February 21, 1955, Serial No. 489,321

9 Claims. (Cl. 214—3)

This invention relates to a portable crane particularly for use in handling and setting poles. For example, in the construction of telephone and power lines, the poles are unloaded approximately in accordance with the spacing at which the poles are to be set. However, the poles roll into different positions depending upon the topography with the result that the poles lie at different angles and distances from the holes in which they are to be set. Consequently, considerable time and labor is required to bring the poles to the desired position and set them in the holes. There are also various obstructions and gullies and the like that make the job more difficult.

Therefore the principal objects of the present invention are to provide a portable crane for movement on solid ground along the right of way and adapted for picking up and setting the poles under power; and to provide the crane with an articulated arm equipped with a gripping device that is readily manipulated under power for gripping a pole, lifting the pole, turning the pole to an erect position over a hole, and to lowering the pole thereinto; and to provide a crane of this character for accomplishing these movements without releasing or regripping of the pole from the time that it is picked up until it is set in the hole.

Other objects of the invention are to provide a readily maneuverable crane; to provide a crane having the articulations of the arm, wrist and finger action of a human being; to provide each section of the crane with independently operable hydraulic mechanisms for individually manipulating the section that is joined therewith; to provide for a simple joint operating connection; and to provide substantial enclosure of the fluid control ducts within the arm of the crane so as not to interfere with the various movements of the crane.

In accomplishing these and other objects of the invention, as hereinafter pointed out, I have provided improved structure the preferred form of which is illustrated in the accompanying drawings wherein:

Fig. 1 is a perspective view of a portable crane constructed in accordance with the present invention and showing the arm thereof extending laterally and in position for gripping a pole lying alongside the right of way on which a telephone line or the like is to be constructed.

Fig. 2 is a side elevational view of the portable crane showing the arm lifted and the pole gripping means thereon turned to support the pole in substantially vertical position preparatory to lowering thereof into the hole.

Fig. 3 is a fragmentary section particularly illustrating the hydraulically operated pulley and cable mechanism for turning the mast of the crane so as to position the arm of the crane in any direction about the vertical axis of the mast.

Fig. 4 is a side elevational view particularly illustrating the turn-table on which the mast is mounted.

Fig. 5 is a plan view of the upper end of the jack mechanism shown in Fig. 4.

Fig. 6 is a horizontal section on the line 6—6 of Fig. 4.

Fig. 7 is a horizontal section on the line 7—7 of Fig. 4.

Fig. 8 is a horizontal section on the line 8—8 of Fig. 4.

Fig. 9 is a section through the main member or section of the crane arm on the line 9—9 of Fig. 2.

Fig. 10 is an enlarged fragmentary side elevational view of the crane arm and gripping mechanism carried thereby with the gripping mechanism turned to carry the pole in substantially vertical position.

Fig. 11 is a similar fragmentary view but showing the gripping mechanism turned at right angles for carrying the pole in a horizontal position.

Fig. 12 is a fragmentary view particularly illustrating the jack mechanism on the crane arm for oscillating the pole gripping mechanism through the positions shown in Figs. 10 and 11.

Fig. 13 is a cross section through the arm on the line 13—13 of Fig. 10.

Fig. 14 is a section through the arm on the line 14—14 of Fig. 13.

Fig. 15 is a section at right angles to the section shown in Fig. 14, the section being taken on the line 15—15 of Figs. 13 and 14.

Fig. 16 is a fragmentary side elevational view of the universal joint which mounts the gripping jaws with the jaws being swung to one angular position.

Fig. 17 is a similar view with the jaws being swung to another angular position.

Fig. 18 is a detailed view showing the hydraulic mechanisms for actuating the gripping jaws.

Fig. 19 is a view similar to Fig. 18 but showing the gripping jaws in another position.

Fig. 20 is a similar view but showing the jaws in open position.

Fig. 21 is a diagrammatical view showing the system of ducts for supplying pressure fluid to the control valves supplying the various hydraulic jacks used on the crane.

Referring more in detail to the drawings:

1 designates a portable crane constructed in accordance with the present invention and which includes a motor driven truck 2 having front steering wheels 3 and power driven tractor treads 4. Mounted on the truck is a turn-table 5 that is adapted to rotate about a vertical axis. The turn-table carries a crane 6 including a mast or post 7 which is preferably of tubular form to pass therethrough the various ducts 8 through which hydraulic fluid is passed to and from the respective hydraulic jack mechanisms of the crane as later to be described.

Extending outwardly and upwardly from the mast 7 is a yoke 9 carrying a transverse pivot pin 10 upon which the main arm 11 of a boom 12 is pivotally mounted for swinging movement in a vertical plane under control of a sydraulic extensible member on jack 13. The jack 13 includes a cylinder 14 having its lower end pivotally connected as at 15 with ears 16 that are fixed to the turn-table 5. Slidably mounted in the cylinder 14 is a piston 17 and connected therewith is a rod 18 slidably movable through the head 19 of the cylinder. The outer end of the rod 18 connects by a pivot pin 20 with a depending ear 20' on the main arm 11 of the boom 12. Hydraulic fluid is supplied to the upper and lower ends of the cylinder 14 through flexible ducts 21 and 22 that pass downwardly through the post or mast 7 and connect with a four-way control valve 23 which is operated through its various positions by a lever 24 to admit a pressure fluid to the lower end of the cylinder 14 and exhaust the pressure fluid from the upper end of the cylinder for swinging the arm 11 in an upward direction and to admit pressure fluid to the upper end of the cylinder 14 and exhaust the pressure fluid from the lower end of the cylinder for swinging the arm 11 in a downward direction on the pivot pin 10,

The outer end of the arm 11 terminates in a yoke 25 and pivotally connected to the yoke by a transverse pin 26 is an outer arm or extension 27 of the boom 12. The arm 27 is in the form of a bell crank and includes a shorter lateral arm 28 adjacent the point of the pin 26. The arm 27 is raised and lowered on the pin 26 by a hydraulic extensible member or jack 29 including a cylinder 30 that is fixed upon the arm 11 by brackets 31 and 32. The jack also includes a piston (not shown) similar to the piston 17 and a piston rod 33 that is slidable through a head 34 at the outer end of the cylinder 30. A pressure fluid is alternately admitted and exhausted from the respective ends of the cylinder 30 through flexible ducts 37 and 38 which are connected with a control valve 39. The control valve 39 is located alongside the control vale 23 for effecting operation of the arm 27. The piston rod 33 is connected with a cross head 40 having rolling support on the arm 11 by a roller 41. Pivotally connected with the outer end of the piston rod 33 by a pin 35 is a connecting link 43 which connects with the arm 28 by a pin 42.

The arm 11 of the boom may be stiffened by a truss rod 44 having its ends attached to the ends of the arm 11 and extending over a projecting part of the bracket 31 as best shown in Fig. 5. The arms 27 and 28 may be trussed by a rod 45 that connects the short arm 28 with the outer end of the arm 27.

Oscillatably mounted on the outer end of the arm 27 of the boom 12 is a gripping head 46 as now to be described. The head 46 includes a sleeve 47 that is sleeved upon the outer end of the arm 27 and is retained in position thereon by a plate 48 that is attached to the outer end of the arm by a fastening device 49 and a stop 50 that is attached to the arm at the rear-end of the sleeve by a fastening device 51 that also connects the truss rod 45. Fixed at opposite sides of the outer end of the sleeve 47 are plates 52 and 53 carrying a transverse pin 54. The plates 52 and 53 are secured to the sleeve by fastening devices 55 as best shown in Fig. 15. Oscillatably mounted on the pin 54 is a sleeve portion 56 of a yoke 57. The yoke 57 has forwardly extending ears 58 and 59 carrying a pin 60 at substantially right angles to the pin 54. Pivotally mounted on the pin 60 are jaws 61 and 62. The jaws 61 and 62 include gripping portions 63 and 64 having a shape to engage over and grip a pole 65 therebetween as best shown in Fig. 15.

The sleeve 47 is rotated on the arm 27 by a cable mechanism 66 operated by a hydraulic extensible member or jack 67. The hydraulic jack 67 includes a cylinder 68 that is attached at one end to the underside of the arm 27. The jack has a piston rod 69 that is reciprocable through the forward or opposite end of the cylinder 68 responsive to admission and discharge of pressure fluid to the respective ends of the cylinder 68 through flexible ducts 70 and 71. The arm 27 of the boom is also of tubular construction so as to pass the ducts 70 and 71 therethrough, through the arm 11, and through the mast 7 to connect with a control valve 72 that is located alongside the control valve 39. The cable mechanism of the jack includes a pulley 73 that is formed by an annular flange 74 encircling the inner end of the sleeve 47 and which is provided with a groove 75 to contain an endless cable 76 having runs 77 and 78 operating over pulley 79 and 80 that are carried by a bracket 81 fixed to the arm 27. The runs 77 and 78 of the cable extend rearwardly of the arm over a pulley 82 that is carried by a bracket 84 fixed to and depending from the underside of the arm 27 adjacent the rear end of the cylinder 67. The pulley 82 is preferably mounted on a cross arm 85 carried by the bracket 84 and which is adjustable on the bracket by a threaded shaft 86 to adjust the tension of the cable 76.

The free end of the piston rod 69 is connected to one of the runs of the cable 76 by means of a clamp 87 while the cable is connected to the sleeve 47 by a clamp 88. The clamp 88 straddles the flange 74 and has its ends fixed to the sleeve 47 by fastening devices 89. The clamp 87

carries a set screw 90 that engages the cable and clamps the cable in the groove of the pulley. With this arrangement, the sleeve 47 may be oscillated in either sidewise direction on the arm 27 so as to turn the jaws carried thereby to and from the position shown in Figs. 10 and 11, for example, when the fluid pressure medium is admitted to the inner end of the cylinder 68 and exhausted from the outer end, the piston rod 69 moves forwardly to pull on the run 78 of the cable over the pulley 82 causing rearward movement of the opposite run 77 and counterclockwise rotation of the sleeve 47 (Fig. 13). When the flow of pressure fluid is reversed the piston rod 69 moves retractively in the cylinder 68 and pulls on the run 77 to cause turning movement of the sleeve 47 in a clockwise direction (Fig. 13).

The yoke 57 is oscillatable on the pin 54 to swing the jaws through the positions shown in Figs. 16 and 17, this is effected by providing the sleeve 47 with a cross head 91 having laterally extending ends 92 carrying ball sockets 93 and 94.

Swivelly mounted in the socket 93 is ball shaped lug 95 carrying one end of a hydraulic cylinder 96. Slidably mounted through the opposite end of the cylinder 96 is a piston rod 97 that is pivotally connected by a pin 98 with ears 99 attached to an arm 98' extending laterally from the yoke 57 (see Figs. 16 to 20 inclusive).

Fluid is supplied to the respective ends of the cylinder 96 through ducts 100 and 101 that also lead through the hollow arms of the boom and through the post 7 to connect with a control valve 102 that is located alongside the control valves previously described. When pressure fluid is admitted to the outer end of the cylinder, the jaw assembly is rocked in one direction on the pivot 54 (Fig. 17) and when the pressure fluid is admitted to the opposite end of the cylinder 96 the jaws are rocked in the opposite direction on the pivot 54 (Fig. 16). It is obvious that since the cylinder is connected with the sleeve 47 this movement of the jaws may be effected in any position of the gripping head.

The jaws are pivoted to open and closed position on the pin 60 (Figs. 15 and 20), and the jaws are swung from side-to-side on the pin 60 as shown in Figs. 18 and 19 as now to be described.

Fixed to and diverging from the jaws are arms 103 and 104. The arms 103 and 104 are shaped to carry a hydraulic extensible member or jack 105 transversely of the sleeve 47 to give the desired clearance for movement of the jaws through the positions shown in Figs. 16 and 17.

The jack 105 includes a cylinder 106 that is connected at one end with the rearwardly extending terminal 107 of the arm 103 by means of a pin 108 extending through a lug 109 at that end of the cylinder. The jack also includes a piston rod 110 similar to the other jack mechanisms, the rod being connected by a pin 111 with a terminal 112 of the other arm 104. Pressure fluid is admitted and exhausted from the respective ends of the cylinder 106 through flexible ducts 113 and 114 that extend through the hollow arms of the boom and through the post 7 to connect with a control valve 115 carried alongside the control valves previously described.

It is obvious that when pressure fluid is admitted alternately to one end of the cylinder and exhausted from the opposite end, the jaws are moved to and from each other on the pivot pin 60 so as to open and close on the pole, as shown in Figs. 18 and 20.

The mechanism for effecting sidewise movement of the jaws as a unit, comprises a hydraulic extensible member or jack 116 also including a cylinder 117 having a ball shaped lug 118 at one end of the cylinder which is engaged within the ball socket 94 at the end of the cross arm 91. The jack also includes a piston rod 119 that pivotally connects, as at 120, with a brace portion 121 of the arm 103 as shown in Fig. 10. Fluid pressure is alternately admitted and exhausted from the ends of the

cylinder 117 through flexible ducts 122 and 123 that also extend through the arms of the boom and through the post 7 to connect with a control valve 124 also mounted alongside the control valves previously described and shown in Fig. 1.

The turn-table 5 is rotated by means of a tackle 125 operated by a jack 126 similar to the other jacks previously described. The jack 126 includes a cylinder 127 that is mounted on the truck at one side of the turn-table. Extending from the upper end of the cylinder 127 is a piston rod 128 that carries a cross head 129. The cross head 129 is slidable on an upright frame 130 and is connected by means of a turnbuckle 131 with the cable 132 of the tackle mechanism 125. The tackle mechanism 125 includes a cross member 133 at the upper end of the frame 130 and which carries pulleys 134 and 135 at one end and a pulley 136 at the other end. Fixed to and extending laterally from the cylinder 127 is a bracket 137 carrying a pulley 138 in substantial alignment with the pulleys 134 and 135. Fixed to the truck at opposite sides of the frame 130 are pulleys 139 and 140.

Extending circumferentially of the lower end of the mast is a grooved flange 141 substantially at the level of the pulleys 139 and 140 (see Figs. 4 and 8). One end 142 of the cable 132 is attached to the cross member 129 and extends downwardly under the pulley 140, around the pulley 141, under the pulley 139 and upwardly over the pulley 135, and downwardly from the pulley 135 to connect with the other end of the cross member 129 as indicated at 143. The cable then continues downwardly and under the pulley 138, upwardly over the pulley 134 and across the pulley 136 where it extends downwardly to connect with the opposite end of the cross member 129 in direct alignment with the connection of the other end of the cable designated 142.

With this arrangement, up and down movement of the cross member 129 will cause the cable to move in opposite directions to turn the turn-table about its axis of rotation. Pressure fluid is supplied to the upper and lower ends of the cylinder 127 through ducts 144 and 145 that connect with a control valve 146 mounted alongside the other control valves previously described.

The control valves are connected with pressure fluid supply and exhaust manifolds 147 and 148 through pairs of branch ducts 149 and 150 respectively. The supply manifold 147 is connected by a duct 151 with a pump 152 and the exhaust manifold 148 is connected by a duct 153 with a storage vessel 154. The pump 152 draws the fluid from the storage vessel 154 through a duct 155 that is connected with the intake side of the pump. The pump 152 is driven by a suitable prime mover, such as an internal combustion engine 156, the pump and engine being mounted as a unit on the truck 2 as shown in Figs. 1 and 2 of the drawings.

A crane constructed and assembled as described may be operated as follows:

The poles 65 are usually distributed along a right of way to be constructed. The poles are usually rolled from a truck and are apt to land in various positions, however, the boom 12 of the crane is readily adaptable to the position of the poles. The crane is moved along the right of way and is stopped alongside a pole to be set. The boom 12 is swung to a position over the side of the truck, this is effected by operating the control valve 146 for the hydraulic jack 126 to admit pressure fluid to one of the ends of the cylinder 127 thereof for raising or lowering the cross member 129, depending upon the side of the truck at which the boom is to be moved. For example, when the pressure fluid is admitted to the upper end of the cylinder 127, the movement of the cross member 129 is downwardly to pull on the run of the cable 132 operating over the pulley 135 to cause the cable to turn the turn-table 5 on which the mast 7 is mounted. When the boom is moved to the proper position, the main arm 11 of the boom is lowered

by operating the control valve 23 for the hydraulic jack 13 so as to admit pressure fluid to the upper end of the cylinder 14. The piston rod 18 then moves the boom downwardly to bring the gripping head into position over the pole. The arm 27 of the boom may also be swung on the pivot pin 26 by operating the jack 29. If the control valve 39 is operated to admit pressure fluid to the outer end of the cylinder 30 the arm 27 is swung upwardly with respect to the main arm 11 and if the pressure fluid is admitted to the lower end of the cylinder 30, the arm 27 is swung downwardly. If desired, the control valves 23 and 39 for the jacks 29 and 13 may be simultaneously operated until the gripping head is in proper position realtive to the pole.

The jaws 61 and 62 are opened by operating the control valve 115 for the jack 105 to swing the jaws open as shown in Fig. 20. The opened jaws may be adjusted in parallel relation with the pole by operating the jacks 67, 96, 106 and 116. Operation of the jack 67 effects movement of the tackle cable 132 to turn the sleeve 47 about the axis of the boom arm 27 so that the open side of the jaws is parallel with the sides of the pole. It is thus obvious that the jaws may be readily positioned according to the angle of the reclining pole, after which the jaws are closed on the pole by operating the control valve 115 for the jack 105. The pole is then lifted from the reclining position by operating the control valve 23 for the jack 13 to effect lifting of the boom. The control valves for the other jacks may also be operated as required to manipulate the pole to a vertical position over the hole in which the pole is to be set. If necessary, the truck carrying the boom may also be moved along the right of way to bring the lower end of the pole over the hole. The boom may then be lowered to deposit the pole in the hole, and retain the pole in plumb while the hole is filled in around the pole after which the jaws are released and the boom is operated to bring the boom away from the pole.

While I have particularly described the crane as being used for setting poles, it is obvious that the crane may also be used for loading poles on a truck, unloading the poles and placing the poles in position so that they may be set as above described.

It is also obvious that the crane may be used for carrying individual poles along a right of way or for handling various other types of articles such as pipes, beams and the like in carrying them through the various positions required in the placement thereof.

From the foregoing it is obvious that I have provided a crane having a boom and gripping jaws that are easily adjusted to positions that may be encountered or required in setting poles and the like.

What I claim and desire to secure by Letters Patent is:

1. In a material handling machine, a support, an elongate boom pivotally mounted on the support for swinging movement of said boom in an arc from the support, an extensible member on the support, means connecting said extensible member and boom for swinging said boom as said member is extended and retracted, an arm pivotally mounted on the boom for swinging movement of said arm in an arc from the boom, an extensible member on the boom, means connecting said extensible member and the arm for swinging said arm as said member is extended and retracted, a head having rotatable support adjacent the outer end of the arm for rotation on an axis substantially longitudinally of the arm, an extensible member on the arm, means connecting said extensible member on the arm and the head for rotating said head on the arm as said extensible member on the arm is extended and retracted, a yoke pivotally mounted on the head remote from the arm for swinging movement of the yoke in an arc from the head, an extensible member on the head, means connecting the extensible member on the head and the yoke for swinging said yoke as said extensible member on the head is extended and retracted, a pair of grip-

ping jaws, means pivotally mounting each of the pair of gripping jaws on the yoke for swinging movement of said jaws on the yoke, extensible means having one end pivotally connected to one of the jaws and the other end pivotally connected to the other jaw for closing and opening said jaws in response to extension and retraction of said extensible means, and extensible means on the head and pivotally connected to one of the jaws for swinging said jaw on the yoke in response to the extension and retraction of said extensible means on the head.

2. In a material handling machine, a support, an elongate boom pivotally mounted on the support for swinging movement of said boom in an arc from the support, an extensible member on the support, means connecting said extensible member and boom for swinging said boom as said member is extended and retracted, an arm pivotally mounted on the boom adjacent the end thereof remote from the support for swinging movement of said arm in an arc from the boom, an extensible member on the boom, means connecting said extensible member and arm for swinging said arm as said member is extended and retracted, a head having rotatable support adjacent the end of the arm for rotation on an axis substantially longitudinally of the arm, means on the arm and connected with the head for rotating said head on the arm, a yoke pivotally mounted on the head remote from the arm for swinging movement of the yoke in an arc from the head, an extensible member on the head, means connecting the extensible member on the head and the yoke for swinging said yoke as said extensible member on the head is extended and retracted, a pair of gripping jaws, means pivotally mounting each of the pair of gripping jaws on the yoke for swinging movement of said jaws on the yoke on an axis perpendicular to the axis of swinging movement of the yoke on the head, extensible means having one end pivotally connected to one of the jaws and the other end pivotally connected to the other jaw for closing and opening said jaws in response to extension and retraction of said extensible means, and extensible means on the head and pivotally connected to one of the jaws for swinging said one jaw on the yoke in response to extension and retraction of said extensible means on the head.

3. In a material handling machine, a support, an elongate boom carried on the support, an arm pivotally mounted on the boom adjacent the end thereof remote from the support for swinging movement of said arm in an arc from the boom, an extensible member on the boom, means connecting said extensible member and arm for swinging said arm as said member is extended and retracted, a head having rotatable support adjacent the end of the arm remote from the boom for rotation on an axis substantially longitudinally of the arm, means on the arm and connected with the head for rotating said head on the arm, a yoke pivotally mounted on the head remote from the arm for swinging movement of the yoke in an arc from the head, an extensible member on the head, means connecting the extensible member on the head and the yoke for swinging said yoke as said extensible member on the head is extended and retracted, a pair of gripping jaws, means pivotally mounting each of the pair of gripping jaws on the yoke for swinging movement of said jaws on the yoke on an axis perpendicular to the axis of swinging movement of the yoke on the head, extensible means having one end pivotally connected to one of the jaws and the other end pivotally connected to the other jaw for closing and opening said jaws in response to extension and retraction of said extensible means, and extensible means on the head and pivotally connected to one of the jaws for swinging said one jaw on the yoke in response to extension and retraction of said extensible means on the head.

4. In a material handling machine, a support, an elongate boom carried on the support, an arm pivotally mounted on the boom adjacent the end thereof remote from the support for swinging movement of said arm in an arc from the boom, an extensible member on the boom, means connecting said extensible member and arm for swinging said arm as said member is extended and retracted, a sleeve having rotatable support adjacent the end of the arm remote from the boom for rotation on an axis substantially longitudinally of the arm, means on the arm and connected with the sleeve for rotating said sleeve on the arm, a yoke pivotally mounted on the sleeve remote from the arm for swinging movement of the yoke in an arc from the sleeve, an extensible member on the sleeve, means connecting the extensible member on the sleeve and the yoke for swinging said yoke as said extensible member on the sleeve is extended and retracted, a pair of gripping jaws, means pivotally mounting each of the pair of gripping jaws on the yoke for swinging movement of said jaws on the yoke on an axis perpendicular to the axis of swinging movement of the yoke on the sleeve, extensible means having one end pivotally connected to one of the jaws and the other end pivotally connected to the other jaw for closing and opening said jaws in response to extension and retraction of said extensible means, and extensible means on the sleeve and pivotally connected to one of the jaws for swinging said one jaw on the yoke in response to extension and retraction of said extensible means on the sleeve.

5. In a material handling machine, a support, an elongate boom carried on the support, an arm pivotally mounted on the boom adjacent the end thereof remote from the support for swinging movement of said arm in an arc from the boom, an extensible member on the boom, means connecting said extensible member and arm for swinging said arm as said member is extended and retracted, a sleeve having rotatable support adjacent the end of the arm remote from the boom for rotation on an axis substantially longitudinally of the arm, an extensible member on the arm, means connecting said extensible member on the arm and the sleeve for rotating said sleeve on the arm as said extensible member on the arm is extended and retracted, a yoke pivotally mounted on the sleeve remote from the arm for swinging movement of the yoke in an arc from the sleeve, an extensible member on the sleeve, means connecting the extensible member on the sleeve and the yoke for swinging said yoke as said extensible member on the sleeve is extended and retracted, a pair of gripping jaws, means pivotally mounting each of the pair of gripping jaws on the yoke for swinging movement of said jaws on the yoke on an axis perpendicular to the axis of swinging movement of the yoke on the sleeve, extensible means having one end pivotally connected to one of the jaws and the other end pivotally connected to the other jaw for closing and opening said jaws in response to extension and retraction of said extensible means, extensible means on the sleeve and pivotally connected to one of the jaws for swinging said one jaw on the yoke in response to extension and retraction of said extensible means on the sleeve, and means for controlling the respective extensible means and the extensible members.

6. In a material handling machine, a support, an elongate boom carried on the support, an arm pivotally mounted on the boom adjacent the end thereof remote from the support for swinging movement of said arm in an arc from the boom, an hydraulic extensible member on the boom, means connecting said hydraulic extensible member and arm for swinging said arm as said member is extended and retracted, a sleeve having rotatable support adjacent the end of the arm remote from the boom for rotation on an axis substantially longitudinally of the arm, an hydraulic extensible member on the arm, means connecting said hydraulic extensible member on the arm and the sleeve for rotating said sleeve on the arm as said hydraulic extensible member on the arm is extended and retracted, a yoke pivotally mounted on the sleeve

remote from the arm for swinging movement of the yoke in an arc from the sleeve, an hydraulic extensible member on the sleeve, means connecting the hydraulic extensible member on the sleeve and the yoke for swinging said yoke as said hydraulic extensible member on the sleeve is extended and retracted, a pair of gripping jaws, means pivotally mounting each of the pair of gripping jaws on the yoke for swinging movement of said jaws on the yoke on an axis perpendicular to the axis of swinging movement of the yoke on the sleeve, hydraulic extensible means having one end pivotally connected to one of the jaws and the other end pivotally connected to the other jaw for closing and opening said jaws in response to extension and retraction of said hydraulic extensible means, hydraulic extensible means on the sleeve and pivotally connected to one of the jaws for swinging said one jaw on the yoke in response to extension and retraction of said hydraulic extensible means on the sleeve, means for supplying fluid pressure to the respective hydraulic extensible members, and means for controlling the flow of fluid pressure to the respective hydraulic extensible means and the hydraulic extensible members.

7. In a material handling machine, a mobile support, an upright mast, means rotatably mounting the mast on the mobile support for rotation on a substantially vertical axis, means on the mobile support and having connection with the mast for selectively rotating said mast, an elongate boom, means pivotally mounting one end of the elongate boom on the upper end of the upright mast for swinging movement in an arc from said mast, an extensible member one end of which is connected with the mast and the other end connected with the elongate boom intermediate the ends thereof for swinging said boom as said extensible member is extended and retracted, an arm pivotally mounted on the boom adjacent the end thereof remote from the mast for swinging movement of the arm in an arc from the boom, an extensible member on the boom, means connecting said extensible member and arm for swinging said arm as said member is extended and retracted, a sleeve having rotatable support adjacent the end of the arm remote from the boom for rotation on an axis substantially longitudinally of the arm, an extensible member on the arm, means connecting said extensible member on the arm and the sleeve for rotating said sleeve on the arm as said extensible member on the arm is extended and retracted, a yoke pivotally mounted on the sleeve remote from the arm for swinging movement of the yoke in an arc from the sleeve, an extensible member on the sleeve, means connecting the extensible member on the sleeve and the yoke for swinging said yoke as said extensible member on the sleeve is extended and retracted, a pair of gripping jaws, means pivotally mounting each of the pair of gripping jaws on the yoke for swinging movement of said jaws on the yoke on an axis perpendicular to the axis of swinging movement of the yoke on the sleeve, extensible means having one end pivotally connected to one of the jaws and the other end pivotally connected to the other jaw for closing and opening said jaws in response to extension and retraction of said extensible means, and extensible means on the sleeve and pivotally connected to one of the jaws for swinging said one jaw on the yoke in response to extension and retraction of said extensible means on the sleeve.

8. In a material handling machine, a mobile support, an upright mast, means rotatably mounting the mast on the mobile support for rotation on a substantially vertical axis, means on the mobile support and having connection with the mast for selectively rotating said mast, an elongate boom, means pivotally mounting one end of the elongate boom on the upper end of the upright mast for swinging movement in an arc from said mast, an extensible member one end of which is connected with the mast and the other end connected with the elongate boom intermediate the ends thereof for swinging said boom as said extensible member is extended and retracted, an arm pivotally mounted on the boom adjacent the end thereof remote from the mast for swinging movement of the arm in an arc from the boom, an hydraulic extensible member on the boom, means connecting said hydraulic extensible member and arm for swinging said arm as said member is extended and retracted, a sleeve having rotatable support adjacent the end of the arm remote from the boom for rotation on an axis substantially longitudinally of the arm, an hydraulic extensible member on the arm, means connecting said hydraulic extensible member on the arm and the sleeve for rotating said sleeve on the arm as said hydraulic extensible member on the arm is extended and retracted, a yoke pivotally mounted on the sleeve remote from the arm for swinging movement of the yoke in an arc from the sleeve, an hydraulic extensible member on the sleeve, means connecting the hydraulic extensible member on the sleeve and the yoke for swinging said yoke as said hydraulic extensible member on the sleeve is extended and retracted, a pair of gripping jaws, means pivotally mounting each of the pair of gripping jaws on the yoke for swinging movement of said jaws on the yoke on an axis perpendicular to the axis of swinging movement of the yoke on the sleeve, hydraulic extensible means having one end pivotally connected to one of the jaws and the other end pivotally connected to the other jaw for closing and opening said jaws in response to extension and retraction of said hydraulic extensible means, hydraulic extensible means on the sleeve and pivotally connected to one of the jaws for swinging said one jaw on the yoke in response to extension and retraction of said hydraulic extensible means, means for supplying fluid pressure to the respective hydraulic extensible members, and means for controlling the flow of fluid pressure to the respective hydraulic extensible means and the hydraulic extensible members.

9. In a material handling machine, a mobile support, an upright mast, means rotatably mounting the mast on the mobile support for rotation on a substantially vertical axis, means on the mobile support and having connection with the mast for selectively rotating said mast, an elongate boom, means pivotally mounting one end of the elongate boom on the upper end of the upright mast for swinging movement in an arc from said mast, an extensible member one end of which is connected with the mast and the other end connected with the elongate boom intermediate the ends thereof for swinging said boom as said extensible member is extended and retracted, an arm pivotally mounted on the boom for swinging movement of said arm in an arc from the boom, an hydraulic extensible member on the boom, means connecting said hydraulic extensible member and arm for swinging said arm as said member is extended and retracted, a sleeve having rotatable support adjacent the end of the arm remote from the boom for rotation on an axis substantially longitudinally of the arm, an hydraulic extensible member on the arm, means connecting said hydraulic extensible member on the arm and the sleeve for rotating said sleeve on the arm as said hydraulic extensible member on the arm is extended and retracted, a yoke pivotally mounted on the sleeve remote from the arm for swinging movement of the yoke in an arc from the arm, an hydraulic extensible member on the sleeve, means connecting the hydraulic extensible member on the sleeve and the yoke for swinging said yoke as said hydraulic extensible member on the sleeve is extended and retracted, a pair of gripping jaws, means pivotally mounting each of the pair of gripping jaws on the yoke for swinging movement of said jaws on the yoke, hydraulic extensible means having one end pivotally connected to one of the jaws and the other end pivotally connected to the other jaw for closing and opening said jaws in response to extension and retraction of said hydraulic extensible means, hydraulic extensible means on the sleeve and pivotally connected to one of the jaws for swinging said one jaw on the yoke in response to extension and retraction of said hydraulic

extensible means on the sleeve, means for supplying fluid pressure to the respective hydraulic extensible members and means for controlling the flow of fluid pressure to the respective hydraulic extensible means and the hydraulic extensible members.

References Cited in the file of this patent

UNITED STATES PATENTS

2,632,574 Goertz ---------- Mar. 24, 1953
2,702,137 Ives ---------- Feb. 15, 1955
2,725,996 Britton ---------- Dec. 6, 1955

FOREIGN PATENTS

174,407 Austria ---------- Mar. 25, 1953
1,085,841 France ---------- Feb. 7, 1955