Dec. 30, 1952 E. F. KULIKOWSKI 2,623,999

ANTENNA SYSTEM

Filed Jan. 15, 1946

FIG. 1

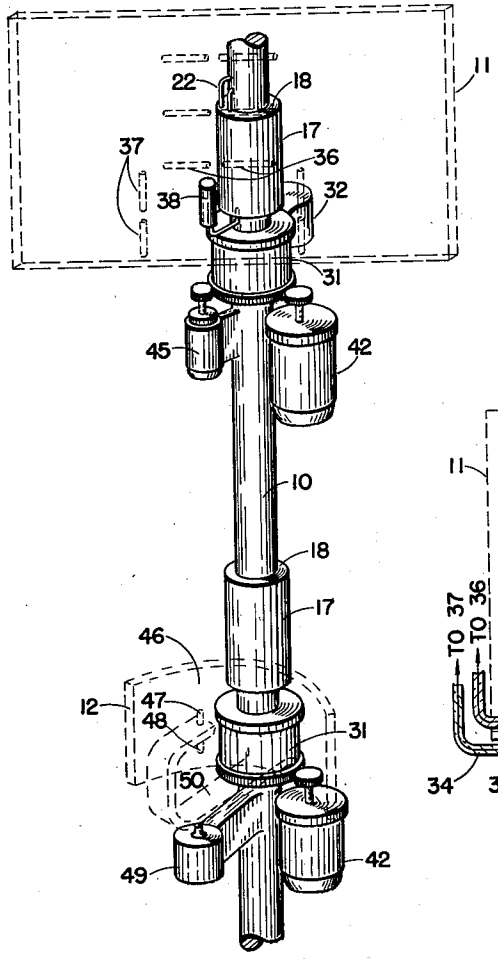

FIG. 2

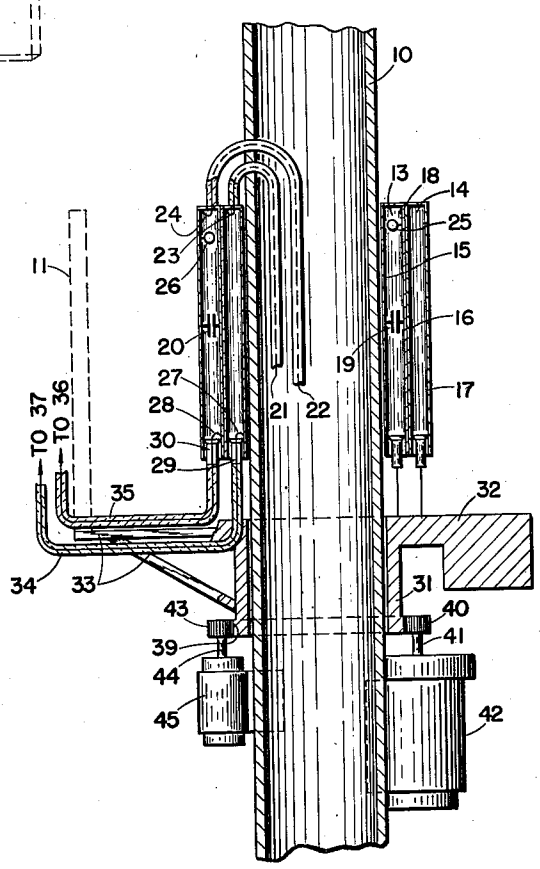

Inventor

EDWIN F. KULIKOWSKI

By

Attorney

Patented Dec. 30, 1952 2,623,999

UNITED STATES PATENT OFFICE

2,623,999

ANTENNA SYSTEM

Edwin F. Kulikowski, Mount Rainier, Md.

Application January 15, 1946, Serial No. 641,368

7 Claims. (Cl. 250—33)

(Granted under the act of March 3, 1883, as amended April 30, 1928; 370 O. G. 757)

1

This invention relates in general to radio antenna systems, and more particularly to an ultra-high frequency antenna system in which a plurality of rotary antennas may be vertically disposed and independently excited and controlled on a single supporting structure by means of rotating joint assemblies associated with the supporting structure.

In the problem of mounting a plurality of rotary antennas, particularly of the highly directive ultra-high frequency types required in conventional radio and radar installations, in a limited space, for example, that encountered in mounting the large number of antennas required on ships, it has heretofore been necessary to mount these antennas individually, thus consuming much of the already limited surface of the superstructure of the ship and considerably reducing the space available for the other apparatus required by such vessels. Likewise, it is often highly desirable, where a plurality of radio transmitting and receiving systems are housed within the same or adjacent structures, to mount the antennas associated with such systems on a single supporting structure to reduce the space required by such installations. Further, many operational advantages have been found to result from mounting these antennas on the same vertical axis.

Accordingly, one of the objects of this invention is to provide a rotary antenna structure whereby a number of similar rotary antenna units can be mounted on a single metal mast, the feed and control cables being carried inside the mast.

Another object of the invention is to provide a plurality of antennas for independent operation at high frequency and which may be mounted on a single mast in such a manner as to be capable of independent rotation.

Another object of the invention is to provide a supporting structure for a plurality of high frequency antennas which permits independent rotary control of each of the antennas without requiring the use of connecting brushes and slip rings or of complicated coupling devices in the feed line to the antenna.

Other objects, advantages and capabilities of the invention will become apparent from the following description taken in conjunction with the accompanying drawings, showing only a preferred embodiment of the invention, in which:

Fig. 1 is a perspective sketch illustrating one embodiment of the invention;

Fig. 2 is a longitudinal section of the upper portion of the antenna structure shown in Fig. 1.

2

In accordance with one feature of the invention, the rotating joint makes use of a concentric half-wave resonator which is coaxial with the mast and attached thereto. The feed cable excites this resonator. Power for the antenna is withdrawn from the resonator by means of an inductive loop which is mechanically attached to a rotating finger plate assembly. This rotating finger plate assembly is in turn attached to the rotating antenna mounting structure. A second half-wave resonator concentric with the first may be used to feed an auxiliary antenna or radiators associated with the antenna fed by the first concentric resonator.

As provided by another feature of the invention, a number of similar rotary antenna units are mounted on a single mast, the feed and control cables for energizing and controlling the rotation of said antennas being carried inside the hollow mast. This system must be counter-balanced by providing a counterweight extending radially from the antenna mount in a direction diametrically opposite that of the antenna radiating structure to insure good bearing life for the antenna rotating mount.

Referring now to Figs. 1 and 2, and more particularly to Fig. 1, the antenna system shown comprises a tubular vertical mast 10 which has mounted at axially spaced locations thereon a plurality of individual rotary antenna units, the antenna units 11 and 12 only being shown in this figure for the sake of illustration of the invention and not in a limiting sense thereof. These antenna units 11 and 12 may be similar or entirely different types determined by the use for which the antennas were designed. For example, the upper antenna unit 11 may be of the type associated with air search radar apparatus while the lower antenna unit 12 may be of the type normally associated with surface search radar apparatus, such as the two antenna units shown in dotted line in Fig. 1.

Since the two antenna units 11 and 12 each are of substantially similar construction, in the following description of the mechanical and structural details of the system, the description of one of the units will suffice for the others. The embodiment described employs only a pair of high frequency radar antennas, each designed for a specialized function.

Thus, as represented in Fig. 2, the antenna unit 11 comprises two concentric half wave resonators 13 and 14 surrounding the mast 10. These resonators are formed by the nested arrangement of the concentric tubes 15, 16 and 17, the

adjacent upper ends of which are connected and closed by means of the annular disk 18. The length of these resonators 13 and 14 in a plane parallel to the axis of the mast 10 is slightly greater than a half wave length at the frequency of the excitation energy transmitted to the antenna 11. The resonators function as an infinite number of adjacent half-wave length sections of a parallel wire transmission line arranged concentrically about the vertical mast 10, the pairs of parallel wires being formed effectively by the concentric tubes 15 and 16 in the case of resonator 13, and 16 and 17 in the case of resonator 14. Thus, by establishing a current maximum for the standing wave of current along the line at the end of resonator adjacent the annular disk 18, another current maximum is established at the lower or open end of the resonator. At approximately a quarter wave length from the annular disk 18 and within the resonating cavity of the half wave resonators 13 and 14, tunable condensers 19 and 20 are supplied for the resonators 13 and 14, respectively, to permit accurate manual tuning of these resonating chambers to provide a current maximum and thus maximum amplitude of excitation at the lower ends of the resonating cavities 13 and 14 when the source of excitation of the cavities is adjacent the annular disk 18. To transmit and supply the excitation energy from the transmitter oscillator to the resonators 13 and 14, the pair of coaxial transmission lines 21 and 22 coupled to the transmitter output are carried through the hollow core of the tubular mast member 10 and through openings in the wall of the tubular mast 10 and the annular disk 18 to inductive coupling loops 23 and 24 in the resonators 13 and 14, respectively, to excite the excitation fields in the resonators 13 and 14 and establish a current maximum at that point. These inductive coupling loops 23 and 24 are connected at one end to the center conductor of the coaxial transmission lines 21 and 22 and at their other end to the annular disk 18 to which the outer conductors of the transmission lines 21 and 22 are connected to establish the energy fields in the resonators. Since these resonators completely surround the mast 10, the source of excitation appears from the output end of the resonators to be effectively at any radial position relative to the axis of the mast, at the top of the resonating cavity. To aid in the accurate manual tuning of the resonators 13 and 14 there are provided, in addition to the capacitive tuning members 19 and 20, a plurality of inductive tuning paddles or loops 25 and 26. Thus, by careful control of the orientation and spacing of these tuning elements the effective wavelength of the resonators can be adjusted to achieve maximum transfer of power to the antenna feeder coaxial lines. Obviously, conventional wave guide transmission systems may be employed instead of the coaxial lines wherever desired, depending upon the frequency at which the antenna and transmitter are designed to operate, requiring only the substitution of well-known capacitive stubs for the inductive loops 23, 24 to establish the energy fields in the resonating cavities.

The power for the antenna 11 is withdrawn from the resonators 13 and 14 by means of inductive coupling loops 27 and 28, respectively, which are carried by rotating finger plate assemblies 29 and 30 forming slide contact members to engage the inner walls at the open lower ends of the resonators 13 and 14. These finger plate

assemblies 29 and 30 are adapted to be moved in a circumferential path about the lower ends of resonators 13 and 14 to couple the power from the resonators 13 and 14 in any selected radial direction relative to the axis of the mast 10. These rotating finger plate assemblies 29 and 30 are in turn attached to coaxial transmission lines 34 and 35, respectively, which lines are fixed to the rotary antenna mounting structure comprising a cylindrical antenna mounting bracket 31 concentric with the tubular mast 10, having a counterweight 32 integral with the mounting bracket 31 and extending radially in one direction from the mounting bracket and an antenna support member 33 rigidly secured to the cylindrical mounting bracket 31 and extending in a direction diametrically opposite that of the counter weight 32 for supporting the antenna structure 11. The rotating finger plate assemblies 29 and 30 and coaxial transmission lines 34 and 35 are rigidly carried by the cylindrical mounting bracket 31 at a position along the radial line extending from the axis of the tubular mast 10 to a point on the vertical center line of the antenna structure 11. Coaxial transmission lines 34 and 35, specifically, are coupled to the rotating finger plate assemblies 29 and 30, the inner conductor of the coaxial lines 34 and 35 being connected to one end of the inductive coupling loops 27 and 28 and the outer conductors of the coaxial lines 34 and 35 connected to the finger plate members 29 and 30 and thus to the walls of the resonators 13 and 14 to couple the power from the resonators 13 and 14 and thus from the transmission lines 21 and 22 through a suitable matching section 38 to the radiating elements 36 and 37 forming two antenna systems on the antenna structure 11; for example, radiator 36 forming a radar antenna system and radiator 37 constituting part of a radio identification antenna system.

The lower end of the cylindrical mounting bracket 31 has integral therewith and circumferentially disposed around the lower edge thereof a gear member 39 adapted to be engaged by a drive gear 40 connected by shaft 41 to the armature of antenna drive motor 42, rigidly mounted on the tubular mast 10 below the cylindrical mounting bracket 31.

Thus, by remote control of the energization of antenna rotary drive motor 42, the radial position of the antenna cylindrical mounting bracket 31 and thus the direction of radiation of the antenna structure 11 relative to a given angular reference is determined. The accuracy of this rotary drive and positioning means is increased by means of another drive gear 43 engaging the gear 39 on cylindrical mounting bracket 31 and connected through a shaft 44 to the armature of a synchro motor 45 which may be remotely controlled by a synchro generator (not shown) associated with a compass or some other direction indicating means for accurately controlling the radial position and therefore the direction of radiation of the antenna.

The lower antenna structure 12 may be likewise mounted on the tubular mast 10 in a fashion similar to the mounting means for the antenna structure 11. Various modifications in the specific mounting means required may be necessary to adapt the different types of directional ultra-high frequency antennas to this mounting unit, such as shown in dotted lines with the antenna structure 12 in which the truncated parabolic reflector 46 and the radiating elements 47 and

48 must be rotated about a point radially disposed from the axis of the tubular member 10 and axially aligned with the radiating elements 47 and 48. Thus a bearing support 49 rigidly mounted on the tubular mast 10 and radially disposed therefrom must be provided to support the bearing forming the pivotal axis of the antenna structure 12 with a suitable gearing or mechanical link mechanism coupled between the gear 39 mounted on the lower end of the cylindrical mounting bracket 31 and the common mounting bracket 50 for the truncated parabolic reflector 46 and the radiating elements 47 and 48 to impart proper rotary movement and directional control to the antenna unit 12.

Various modifications may be made in the invention without departing from the spirit and scope thereof.

The invention described herein may be manufactured and used by or for the Government of the United States of America for governmental purposes without the payment of any royalties thereon or therefor.

What is claimed is:

1. An antenna system comprising a substantially hollow mast, a half-wave resonator concentrically surrounding said mast and attached thereto, means coupled to said resonator for exciting same, an antenna structure rotatably supported on said mast, means coupled to said antenna structure for rotating same, and output means coupled to said resonator and rotatable in unison with said antenna structure to couple the output of said resonator in any selected radial direction from said mast to radiating elements on said antenna structure.

2. An antenna system comprising a substantially hollow mast, a half-wave resonator concentrically surrounding said mast and attached thereto, means coupled to said resonator for exciting same, an antenna mounting bracket rotatably supported on said mast, an antenna carried by said mounting bracket at a point radially disposed from said mast, controllable means coupled to said antenna mounting bracket for rotating same, and output means inductively coupled to said resonator and positively connected to radiating elements on said antenna and rotatable with said antenna mounting bracket relative to said resonator whereby the excitation power for said antenna may be coupled from said resonators in any radial direction from said hollow mast.

3. An antenna system for directional radio transmitting and receiving means comprising a stationary supporting mast, a plurality of antenna supporting means vertically disposed on said mast and rotatably supported thereon, a directional antenna carried on each of said supporting means, and electromagnetic coupling means for coupling the radio energy from said transmitting means to the antenna associated therewith comprising cavity resonator means rigidly mounted on said mast and energized by said transmitting means, and coupling means associated with said cavity resonator means and movable relative thereto about said mast for coupling said radio energy from said cavity resonator means to said antenna in any radial direction from said mast.

4. An antenna system for directional radio

transmitting and receiving means comprising a supporting mast, a plurality of half-wave resonators vertically disposed on said mast and concentrically mounted thereon, means for independently exciting said resonators, an antenna supporting structure associated with each of said resonators and rotatably supported on said mast, an antenna rigidly carried by said supporting structure, controllable means connected to said supporting structure for rotating same, and output means inductively coupled to each of said resonators and circumferentially movable relative thereto to couple the output of said resonators to radiating elements on the antennas associated therewith whereby the excitation power for said antennas may be coupled from said resonators to said antennas in any of a plurality of radial directions from said mast.

5. An antenna system comprising a stationary mast structure, a toroidal shaped cavity resonator concentrically surrounding said mast structure and rigidly mounted relative thereto, an antenna structure rotatably supported about said mast, means coupled to said antenna structure for rotating same, means mounted for rotation with said antenna structure and electrically coupled between said cavity resonator and said antenna structure for coupling energy therebetween.

6. An antenna system comprising a stationary mast structure, a cavity resonator having an annular opening in the walls thereof rigidly mounted relative said mast structure, the axis of said annular opening being coincident with the axis of said mast structure, antenna structure rotatably supported about said mast structure, means coupled to said antenna structure for rotating same, electrical coupling means mounted for rotation with said antenna structure and connected to same and extending into said annular opening for coupling energy from said cavity resonator to said antenna structure.

7. An antenna system comprising a stationary mast, an antenna supporting structure rotatably mounted on said mast being capable of continuous rotation in the same direction, means for rotating said supporting structure, an antenna rigidly carried by said supporting structure, first electromagnetic coupling means rigidly mounted on said mast for coupling radio energy to transmission lines associated with said mast, and second electromagnetic coupling means supported by and rotatable with said antenna supporting structure and electromagnetically coupled between said antenna and said first coupling means, said first and second coupling means being relatively movable to provide coupling between said transmission lines and said antenna in any radial direction from said mast to said antenna.

EDWIN F. KULIKOWSKI.

REFERENCES CITED

The following references are of record in the file of this patent:

UNITED STATES PATENTS

Number	Name	Date
2,130,913	Tolson	Sept. 20, 1938
2,411,472	Slobod	May 5, 1944
2,484,822	Gould	Oct. 18, 1949
2,539,657	Carter	Jan. 30, 1951