Jan. 29, 1935. H. GRAHAM 1,989,410

CALENDAR CLOCK

Filed Jan. 11, 1933 2 Sheets-Sheet 1

Fig. 1.

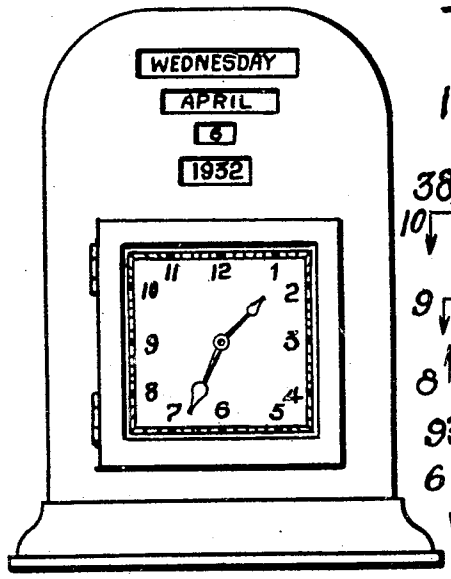

Fig. 2.

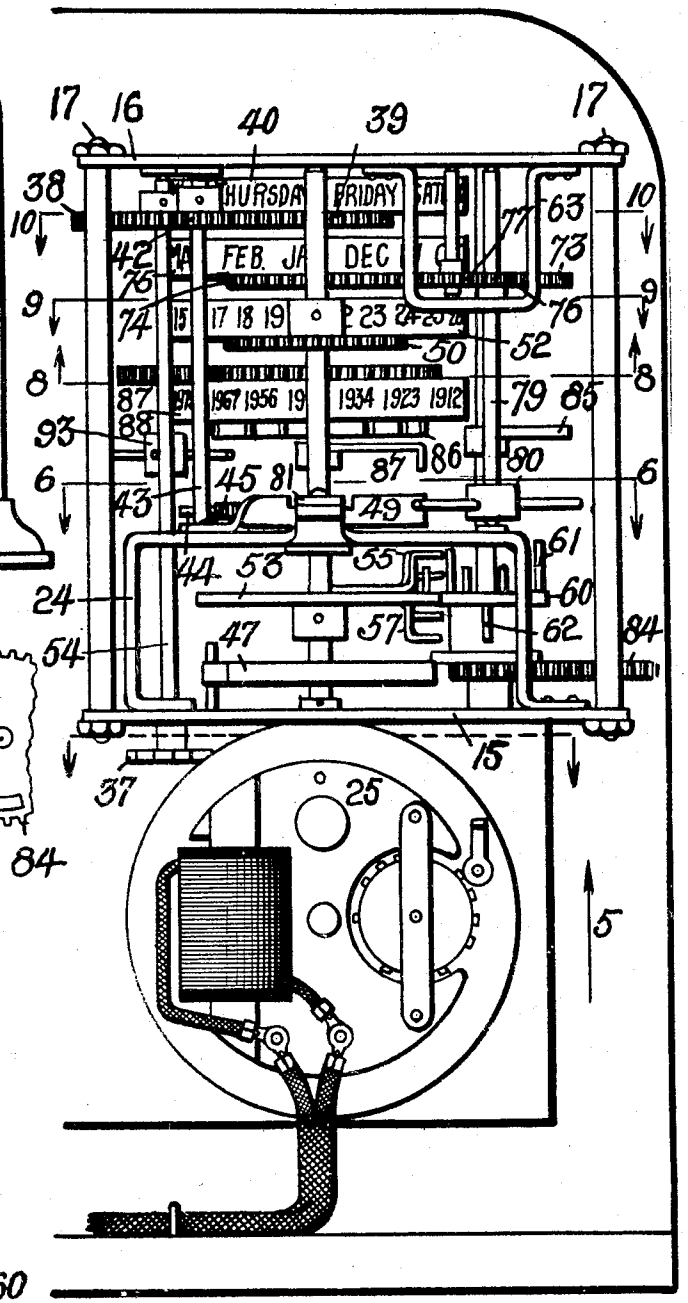

Fig. 3.

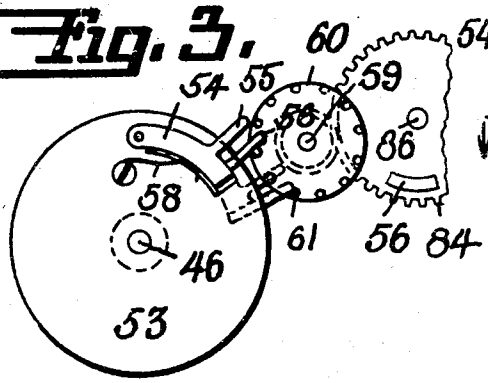

Fig. 4.

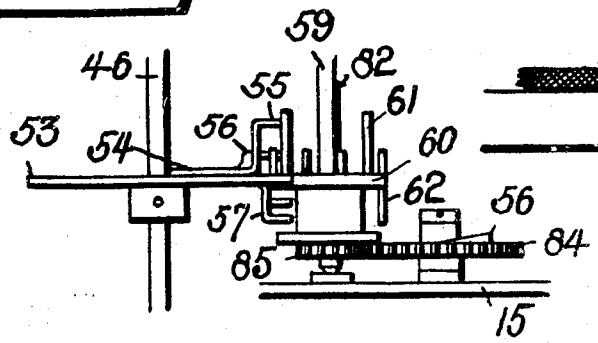

INVENTOR
HARRY GRAHAM
By J. B. W. Girr
ATTORNEY

Jan. 29, 1935. H. GRAHAM 1,989,410

CALENDAR CLOCK

Filed Jan. 11, 1933 2 Sheets-Sheet 2

Fig. 5.

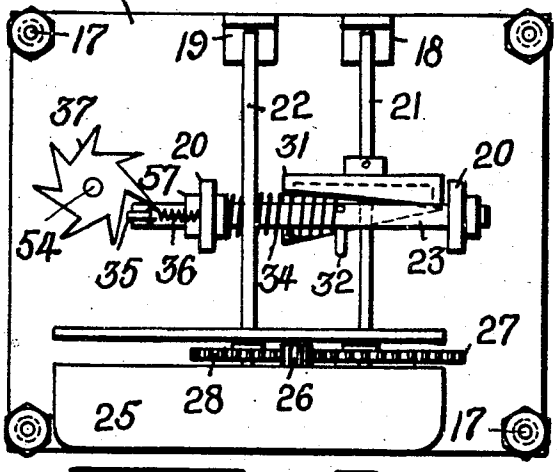

Fig. 6.

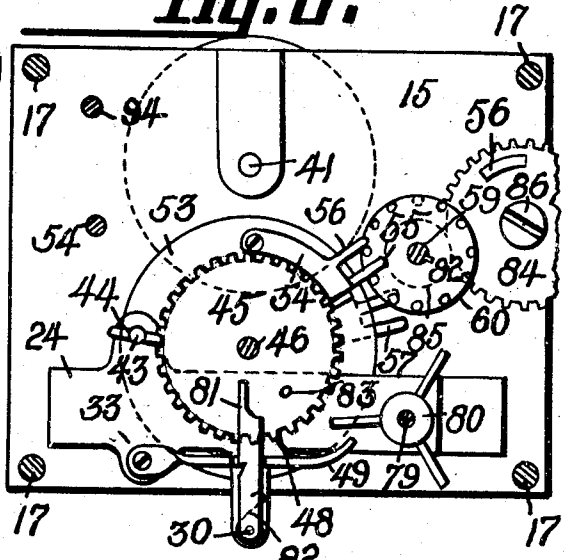

Fig. 7.

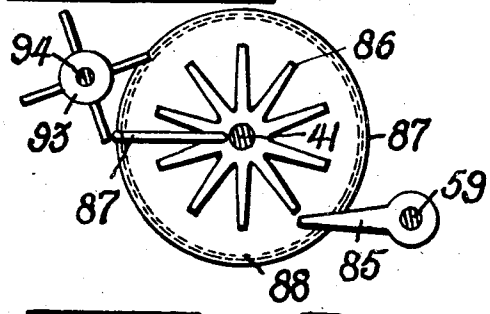

Fig. 8.

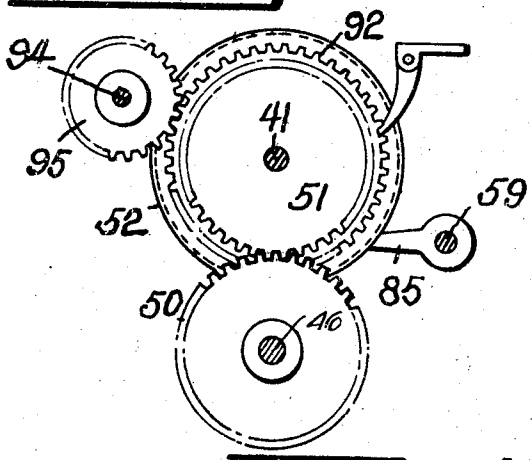

Fig. 9.

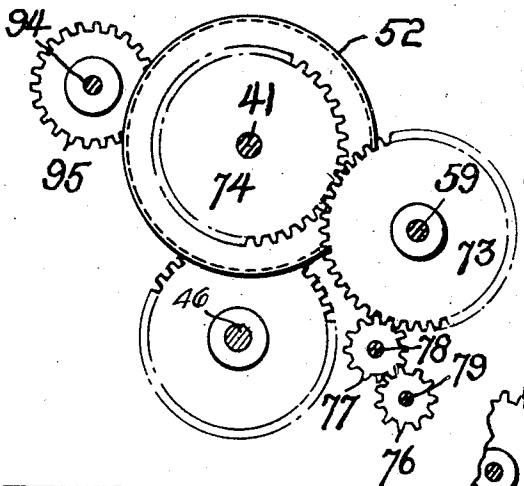

Fig. 10.

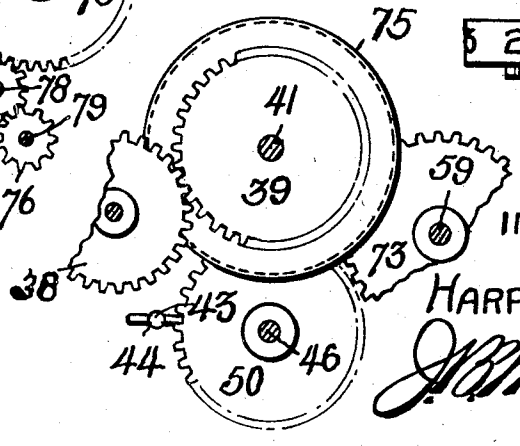

Fig. 11.

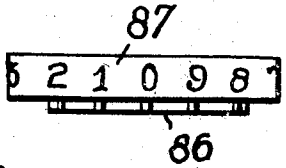

Fig. 12.

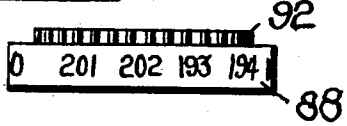

INVENTOR

HARRY GRAHAM

ATTORNEY

Patented Jan. 29, 1935

1,989,410

UNITED STATES PATENT OFFICE

1,989,410

CALENDAR CLOCK

Harry Graham, Brooklyn, N. Y.

Application January 11, 1933, Serial No. 651,167

10 Claims. (Cl. 40—111)

This invention relates to improvements in calendar clocks, which indicate the year, the month of the year, the day of the month, the day of the week, and the provision for automatically compensating itself for leap year, each and every unit operating automatically, together with usual clock mechanism, the functioning of which, together with those enumerated above, will give the correct time of the day or night without any hand adjustments whatsoever.

An object of my invention is to provide a small, neat, attractively designed electric clock that is simple in mechanism, which will operate the various units in synchronism to effect the desired results at all times, and may be used in conjunction with spring wound clocks, electrical repeater clocks which may be controlled from a master clock.

Another object of my invention is to so construct and arrange the various mechanisms so that each will function at its respective time without interfering in any manner with the functioning of any other cooperating mechanism, as long as there is no stoppage in the power. Each of the several units function in combination with each other to produce a desirable, useful, as well as an efficient and desirable, electric clock.

The invention will be better understood from the following description, taken in connection with the accompanying drawings, wherein is shown what is now considered the preferred arrangement of the parts, while the drawings illustrate merely an example of means for putting my invention into practice in such clocks; its scope will be pointed out in the specification and in the appended claims.

Further objects and advantages will become apparent as the description of my invention is hereinafter developed.

Referring to the drawings, Fig. 1 is a face view of my clock; Fig. 2 is a rear view of the various cooperating parts; Fig. 3 is a detailed plan view of the month-changing mechanism; Fig. 4 is a side view of said mechanism to show their cooperative relationship; Fig. 5 is bottom plan view looking in direction of arrow 5, Fig. 2; Fig. 6 is a plan view taken on lines 6—6; Fig. 7 is a sectional plan looking in opposite direction to Fig. 6; Fig. 8 is a like view on lines 8—8; Fig. 9 is a like view on lines 9—9; Fig. 10 is a like view on lines 10—10, all indicated lines shown on Fig. 2; Fig. 11 is a side view of the outside yearly or annual calendar, and Fig. 12 is a like view of the inside 10-year calendar.

It will be noted that the parts are drawn a little heavier than the usual clock mechanism, but it shows clearly the operating and cooperating parts, (the gears are shown in their respective positions without showing their exact ratios) yet it gives, in addition to the time, the day, month and year. Each of the respective cooperating parts is simple yet rugged to stand for the functioning of the parts. Of course, the clock may be as ornamental as desired; for instance, it may have ornamental feet, with ornamental attachments to the front and sides, but these are all to be arranged as may be desired. As shown in Fig. 1, the clock is provided with a small, simple and neat casing, with suitable windows, and with the usual face for telling the time.

Referring now to Fig. 2, the plates 15 and 16 are supported by corner posts 17, while carried by these plates are the various mechanisms to be described. To the underside of plate 15 is secured bearings 18, 19 and 20 for the shafts 21, 22 and 23. Secured to the plate 15 is also attached a bridge bearing 24. The usual clockwork is confined within casing 25, and has gear 26 meshing with 28, each being of a train of reduction gears from the clock, while connected with them is gear 27, the gears 27 and 28 meshing; thus the gear 27 revolves once each twenty-four hours. The gear 28 is secured to the hour shaft 22, housed in bearing 19, its other end secured to the clock mechanism.

The gear 27 is secured on shaft 21, as is the cam 31, by the rotation of which forces the pin 32, that is attached to shaft 23, to be pressed outwardly, thus causing the shaft 23 to turn against the pressure of the spring 34. The outer end of said shaft 33 may be bifurcated so as to pivot an arm 35, and a spring 36 holds the same in its proper position to engage with the star wheel 37. As the cam 31 reaches the end of its revolution at midnight, the pin 32 gradually rides on said cam to its lower part, and by reason thereof the arm 35 revolves and moves the star wheel 37 one tooth. As the star wheel moves one tooth of its revolution, it causes the gear 38, which is mounted on the same shaft, to turn also, and thence such movement is transferred to gear 39, the latter being secured to the disk dial 40 containing the designation of the day, said disk dial being divided into seven days of the week. The disk dial 40 revolves about a common shaft 41, which is housed in suitable bearings and which moves one-seventh of a revolution to cause a change in the day of the week.

By the movement of the gear 38, it causes the

gear 42, which has a ratio of three and one-half to one, to revolve shaft 43. Therefore, it will be seen that gear 42 has made one-half revolution, and that the same movement causes a trip finger 44, the latter provided with a tooth on opposite sides of the shaft 43. Said fingers 44 operate gear wheel 45 each time they contact with a tooth on said gear; the latter secured to a shaft 46 is housed between the plates 15 and 16. Said shaft is under tension of a spring 47, and the gear 45 is held by a spring dog 48 that is secured to arm 49, the latter carried by the bridge bearing 24 under spring tension, as shown in Fig. 6.

The movement of the gear 45 transmits motion through the shaft 46 to gear 50, and thence to a similar gear 51 secured to the date dial 52, the latter dial being divided into thirty-two equal spaces and numbered from 1 to 31, inclusively, with an extra space which is left blank. This dial 52 revolves about shaft 41; thus, as will be noted, said mechanisms explained above constitute the complete movement for the changing of the dials 40 and 52, which represent the day and date.

Referring to Figs. 2, 3 and 4, below the gear 45, and mounted on the same shaft, is secured a disk 53, having a lever 54, which is provided with two fingers 55 and 56, operating above said disk; while, below the same, said lever 54 is provided with a fork 57. The lever 54 is at all times held in proper position by reason of a spring 58; the opening in the disk limits the recurved movement of said lever. A shaft 59 has a spindle 60, on the upper face of which are secured eleven upstanding pins 61 to 72 inclusive, each pin representing a month. It will be noted that one of the pins extends downwardly.

The fingers 55 and 56, as well as the two members of the fork 57, are all equal in length, but their vertical height varies as to the length of the pins in the spindle 60. These arms above referred to denote various numbers of days in the month, and each in turn will engage with its respective pin, according to the month showing. Thus, referring now to Fig. 3, it will be seen that the arm 56 (supposing it to be the 30th day), the finger will engage its respective pin as shown. Now, referring to Fig. 4, it will be seen that the arm 55, being the higher, will pass above the pin representing the thirty-one day month.

Of course, it is to be understood that when we are in a leap year, the spindle 60 is raised by a cam 56; the arms of the fork are like the arms above described, viz., one lower than the other; consequently, the lower arm is too low to reach the February pin 62, but the other arm of such member will contact with it and move it along for a twenty-nine day month. Therefore, it will be noted that the height of the arms is the controlling factor, and not the length, when operating upon the various heights of the pins in the sleeve.

The spacing of the pins on the spindle 60 is equal to the longitudial spacing of the arms 55 and 56. Therefore, the spindle 60 is revolved one-twelfth of a revolution for each revolution of the disk 53, and this movement is transmitted to gears 73 and 74, the latter of which is secured to the month dial 75, which is divided into twelve divisions, each of which represents the month of the year. The movement of the gear 73 operates gear 76 through an idler 77 secured to a short shaft 78, the latter secured in a drop bearing 63 (see Fig. 2),—the ratio between the gears 73 and 76 being about one to three. Said gear 76 is secured to shaft 79, and has also secured thereto a spider 80, having three arms equally spaced; one of the arms contacts with the arm 49, forcing it and its lock pawl from the wheel 45 and the lock lever 81, which is free on its bearing and slips in by action of the spring 82 and holds the arm 49 away from the gear 45. Automatically, the gear 45 when released flies back to its starting position by reason of the action of the spring until the pin 83 strikes the lever 81, thereby releasing arm 49 and allowing it and the spring dog to again lock the wheel 45, and the date dial 84 is set; the month dial having advanced, the mechanism so far disclosed shows the working of the day 40, month 75, date 52 and double dial year 88.

Assuming now that it is the end of the 31st of December and a new day is about to begin, by reason of the shaft 59 revolving, causes the arm 85 to engage with one of the 10 fingers of wheel 86, which in turn is moved one-tenth of a revolution. Secured to the wheel 86 is a dial 87, divided into ten equal parts and numbered from 0 to 9, while inside of this transparent (celluloid) dial is arranged a white dial 88, also evenly spaced and numbered, respectively, from 193 to 202, etc. Thus, the years may be read from 1930 to 2029. This second dial 88 is secured to the gear 92, which also is mounted to turn on shaft 41, as the tenth year approaches, i. e., (1939–1940) arm 87, which is secured to the ten pointed star wheel 88, will engage with one of the four arms on hub 93 to revolve shaft 94, thus causing the latter to move one-quarter revolution. This motion is transmitted by said shaft 94 to gear 95, and thence to gear 92, which is secured to dial 88. By reason of the gear mound dial 88, the one-tenth of a revolution, it thus has changed the inner dial from 193 to 194. And, by further operations as before explained, the outer dial will be operated ten times each ten years. By the foregoing mechanism operating, the clock will automatically change the day, month, date and year.

As leap year approaches, a small cam 56, which is secured to the top of gear 84, is caused to lift the spindle 60 on the shaft 59; said spindle being keyed (not shown) to its shaft, it permits the cam to lift it up as it passes under the same. The weight of the spindle alone causes it to return to its normal or lower position, but, if necessary, a small spring may be applied to assist in that movement. By the raising of the spindle 60 prevents the 28th day arm of the 55 from engaging with the February pin on the spindle 60. Thus, each four years the month of February does not change until the 29th day has elapsed. Gear 84 is mounted to turn on a short shaft 86 from the base plate 15. Said gear meshes with a gear 85 on shaft 59 with a ratio of four to one.

In accordance with the provision of the patent statutes. I have herein described the principle and operation of my invention, together with the mechanism which I now consider to represent the best embodiment thereof, but I desire to have it understood that the mechanism shown is only illustrative, as has been pointed out, and that the invention can be carried out by other means. Also, while it is designed to use the various features and elements in the combination and relations described, some of these may be altered and other omitted without interfering with the more general results outlined, and the invention extends to such uses.

What I claim as new and desire to cover by Letters Patent is:

1. In a calendar clock of the character described, in combination with clock mechanism comprising an hour hand, rotary cam means actuated by said hour hand and adapted to describe one revolution every twenty-four hours, coacting pin-and-toothed means actuated by said cam means and adapted to effect rotation of said toothed means through one-seventh of a revolution per revolution of said cam means, a day-of-the-week-indicating dial actuated from said toothed means and adapted to rotate coextensively therewith, a day-of-the-month-indicating dial also actuated from said toothed means and adapted to rotate coextensively therewith, a month-indicating dial, a spindle associated with said month-indicating dial and comprising twelve equally circumferentially spaced pins of different lengths representing the months of the years, means rotating coextensively with said day-of-the-month-indicating dial and comprising a plurality of arms adapted selectively to engage with a corresponding pin of said spindle to impart one-twelfth of a revolution to the latter for every complete revolution of said day-of-the-month-indicating dial, means rotating coextensively with said spindle, a ten-armed disk, said last-named means being adapted to engage said disk to impart one-tenth of a revolution thereto per revolution of said spindle, and year-indicating means operatively associated with said disk.

2. In a calendar clock mechanism, in combination with the hour hand of the clock, a day-of-the-week-indicating dial and means for actuating said dial from said hour hand, said means including a cam geared to said hour hand and adapted to effect one revolution every twenty-four hours, a rotary shaft including a pin adjacent each end thereof, and a seven-toothed rotary element, one of said pins coacting with said cam whereby movement of the cam is transmitted to the shaft and said other pin, the latter being adapted to engage a tooth of said element and effect one-seventh of a revolution of the latter for every revolution of said cam and shaft, said element being operatively connected to said dial.

3. In a calendar clock mechanism, in combination with the hour hand of the clock, a day-of-the-month dial, means for transmitting movement from said hour hand to said dial, said means including a cog wheel, a two-armed member adapted to effect one-half of a revolution during each twenty-four hours and to move said cog wheel to the extent of one cog during said period, means for normally holding said cog wheel against retrograde movement, a month-indicating dial, and means actuated from the latter and adapted, upon each movement of said month-indicating dial to indicate a new month, to release said cog wheel holding means, spring means actuated upon release of the latter to return said cog wheel to initial position, and means on said cog wheel to return said holding means to a position, wherein it prevents retrograde movement of the cog wheel, when said cog wheel reassumes its initial position.

4. In a calendar clock mechanism, a month-indicating dial, a clock-actuated disk, four arms mounted on and extending laterally from said disk, a spindle operatively connected to said dial and comprising twelve pins of different lengths depending upon the months which they represent, said pins being adapted selectively to engage with said arms in predetermined manner, one of said arms constituting the 31-day arm and being adapted to engage its corresponding pin at the end of each of the 31-day months and to effect one-twelfth of a revolution of said spindle, whereby said dial is caused to indicate the next month.

5. In a calendar clock mechanism, a month-indicating dial, a clock-actuated disk, a plurality of arms mounted on and projecting laterally from said disk and comprising portions disposed at different levels, a spindle operatively associated with said dial and comprising twelve pins of different lengths corresponding severally to the months of the year, said pins being adapted selectively to engage with said arms in predetermined manner, one of said arms constituting the 30-day arm and being adapted to engage one of the pins representing the 30-day months at the end of each of said months and to effect rotation of said spindle, whereby said dial is caused to indicate the next month.

6. In a calendar clock mechanism, a month-indicating dial, a clock-actuated rotatable disk, a spindle operatively connected to said dial and comprising twelve pins of different lengths corresponding severally to the months of the year, means on said disk adapted selectively to engage in predetermined manner, said means comprising means for engaging that one of the pins which represents the 28-day month at the end of each 28-day month and to effect rotation of said spindle, whereby said dial is caused to indicate the next month.

7. In a calendar clock mechanism, a month-indicating dial, a clock-actuated disk, a spindle operatively connected to said dial and comprising twelve pins of different lengths corresponding severally to the months of the year, a plurality of pin-engaging arms extending from said disk and adapted selectively to engage said pins in predetermined manner to effect rotation of said month-indicating dial, one of said arms constituting the 28-day arm and another of said arms constituting the 29-day arm, said 28-day arm being adapted to engage the February pin of said spindle and to effect one-twelfth of a revolution of the latter at the end of the month of February of each ordinary year, and said 29-day arm being adapted to engage the February pin of said spindle and to effect one-twelfth of a revolution of the latter at the end of February of each leap year.

8. The construction defined in claim 7, said spindle being movable and means adapted to move said spindle every fourth year out of the contact field of said 28-day arm and into the contact field of said 29-day arm.

9. In a calendar clock mechanism of the character described, clock-actuated means for indicating the day of the week, the day of the month and the month, and means actuated from said clock-actuated means for indicating the year, said means including a ten-armed disk associated with a transparent dial, said dial being subdivided into ten equal spaces, said spaces being successively numbered from 0 to 9, said ten-armed disk being adapted to describe one-tenth of a revolution each year, a second dial disposed within said transparent dial and comprising ten equal spaces successively numbered with indicia adapted in association with the said numbers to indicate the year, said ten-armed disk being adapted to effect one-tenth of a revolution of

said second dial for every complete revolution of said disk.

10. In a calendar clock mechanism, a month-indicating dial, a clock-actuated disk, a plurality of arms mounted on and extending from said disk, a spindle operatively connected to said dial and comprising twelve pins of different lengths corresponding severally to the lengths of the months of the year, said pins being severally adapted selectively to engage said arms in predetermined manner, whereby to effect one-twelfth of a revolution of said spindle to cause said dial to indicate a new month.

HARRY GRAHAM.