Sept. 26, 1950 E. L. BUDDEN 2,523,860

ADHESIVE BINDING FOR BOOKS

Filed April 26, 1947

Fig. 1

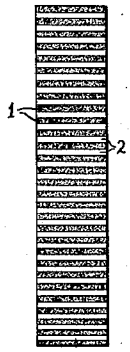

Fig. 2

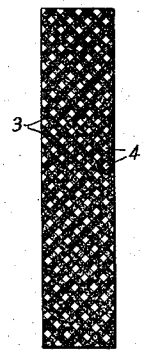

Fig. 3

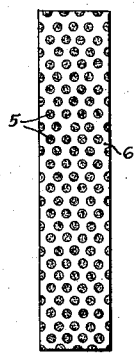

Fig. 4



Fig. 5

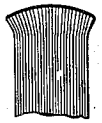

Fig. 6

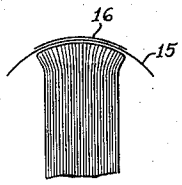

Fig. 7

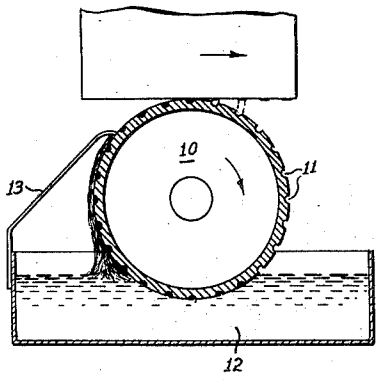

INVENTOR
Edgar L. Budden
BY
Pennie Edmonds Morton & Barrow
ATTORNEYS

Patented Sept. 26, 1950

2,523,860

UNITED STATES PATENT OFFICE

2,523,860

ADHESIVE BINDING FOR BOOKS

Edgar L. Budden, Richmond Hill, N. Y., assignor, by mesne assignments, to De Florez Engineering Company, Incorporated, a corporation of Connecticut

Application April 26, 1947, Serial No. 744,149

5 Claims. (Cl. 281—21)

1

This invention relates to books and has for its object the provision of an improved book and a method of producing the book. The invention is especially concerned with books of the type having the pages secured together with adhesive and provides an improved book of this type.

It has been the practice heretofore to arrange the pages of books in what is known as a page block and to cut through the entire block with a saw or knife to form a uniformly flat binding edge comprising the aligned and closely compacted cut edges of the pages. The adhesive material for binding the pages together, and indirectly to the cover, has been applied as a uniform or continuous layer over the entire binding edge. In some instances an initial coating of penetrating adhesive is applied to the flat binding edge and this is followed by one or more layers of more rapid-setting adhesive which secures the pages together. Some books have the cover attached to the flat binding edge as cut, while other books have the binding edge rounded to form hinges for the cover. The layer of rapid-setting adhesive is used for the purpose of binding the edges of the pages together more securely before rounding the binding edge. When the binding edge is rounded, the pages are spread apart or fanned out, leaving openings into which subsequently applied adhesive penetrates.

When a page or a multiple of pages is secured at the edges to an adhesive film, the resistance to a direct pull on one of the pages is very great. However, if a page is pulled at a corner, the adhesive film is placed in shear, and once started the page will tear out with a much smaller force than when in direct tension. The continuous layer of adhesive is susceptible to shear when pulled angularly and my invention aims to overcome this drawback.

In accordance with my invention, I apply a coating of adhesive to the flat binding edge of the page block prior to the rounding operation in an intermittent pattern, leaving a multiplicity of areas uncoated with that coating of adhesive. I may apply the adhesive in any suitable manner, as by the use of an intaglio design on an adhesive roller applicator. The areas uncoated by this coating are susceptible to a very effective penetration between the spread edges of the pages by the subsequently applied adhesive. It is the usual practice to apply adhesive after the rounding and joint forming operation and prior to the application of the crash. My invention permits this last layer of adhesive to penetrate through the uncoated areas of the previous coating of adhesive and to give a slight bonding to the sides of the pages. This not only saves a considerable amount of adhesive but the pages have much greater resistance to angular tension because each individual part of the penetrating adhesive has boundary edges which interrupt the shearing which takes place in a continuous film or layer.

2

In one advantageous and more complete embodiment of my invention, I apply an initial penetrating adhesive in the usual way and follow this by a second coating applied in intermittent pattern, then round the binding edge and apply the next layer of adhesive in preparation for the crash.

The invention will be better understood after considering the following discussion taken in conjunction with the accompanying drawings, in which:

Figs. 1, 2 and 3 illustrate, in plan views, three different forms of the intermittent application of adhesive to the binding edge of a page block for a book;

Fig. 4 is a fragmentary end view of any one of the page blocks of Figs. 1 to 3;

Fig. 5 is an end view of the page block after rounding;

Fig. 6 is an end view of the page block of Fig. 5 after applying adhesive, crash and backing paper, and

Fig. 7 illustrates diagrammatically an arrangement of apparatus suitable for applying adhesive in accordance with the invention.

Figs. 1 to 3 show the views of three different patterns in which adhesive is applied to the binding edge of the pages of a book block. These patterns may be in any convenient design and may be applied directly over the binding edge. Ordinarily, the entire surface is coated with a layer of thin penetrating adhesive to effect a better bonding of the next layer of adhesive thereto. The adhesive applied in pattern in Figs. 1 to 3 may be applied over such a preliminary coating. If sufficient bonding may be secured with the adhesive applied in pattern, then the preliminary adhesive may be omitted. In Fig. 1 the adhesive 1 is applied in closely spaced transverse strips which may vary in width, say, from one-eighth to one-half inch, with intervening bare areas 2 where no adhesive is applied. This second coating of adhesive may be of the relatively quick-setting so-called "hot melt" type or any type commonly used to receive the crash and cover. Any suitable kind of adhesive may be used. In Fig. 2 the adhesive 3 is applied in crossed diagonal

strips which may vary in width, say, from one-eighth to one-quarter inch. The uncoated small square areas 4 resemble a checkerboard, which may comprise from one-third to one-half or more the area of the binding edge. In Fig. 3 the adhesive 5 is applied in stippled pattern so as to leave small, say, one-eighth to one-quarter inch, diameter coated areas with the remaining surface 6 uncoated.

The grouped pages which form the page block, as shown in Figs. 1 to 6, are usually held tightly together in a clamp forming a compact flat binding edge with a uniform surface. The surface may be retained absolutely flat, as in Fig. 4, for producing certain types of books, or it may be rounded, as in Fig. 5, for producing books which have a hinged cover. My invention is concerned with the application of a coating of adhesive to the flat binding edge of the page block before rounding, followed by at least one other application of adhesive after rounding.

The coating of adhesive of my invention may be applied over the initial penetrating adhesive by passing the pages while held in the clamp over an adhesive roller 10 (Fig. 7) which has an intaglio surface 11 capable of forming the desired intermittent pattern of adhesive on the binding edge. The roller rotates in a bath of adhesive 12 and the doctor blade 13 wipes off all of the adhesive except that retained in the depressions on the roller. The adhesive applied in intermittent pattern is preferably one of the quick-setting type now used for binding books.

In the next step of the operation, the binding edge is rounded, as shown in Fig. 5, by ironing the exposed edges which extend beyond the clamp to spread and flare them outwardly. The flared ends are somewhat opened or spread and are susceptible to penetration by adhesive of suitable consistency. The adhesive applied in intermittent pattern spreads out with the pages in the rounding operation.

In accordance with my invention, the next layer of adhesive is applied over the rounded edge as a continuous layer by passing the grouped pages while still held in the clamp over any suitable adhesive applicator. This continuous layer of adhesive does not penetrate those portions previously coated by the layer in intermittent pattern and, accordingly, only penetrates and enters the spaces between the spread pages which are bare of such adhesive.

Fig. 6 shows the pages of the book with crash 15 applied over the continuous coating of adhesive. After the crash is applied directly over the continuous layer, an additional layer of adhesive may be applied over the crash. A backing paper 16 is applied over the crash to cover the fresh adhesive which oozes therethrough to permit immediate handling of the page block.

Among the advantages in applying the adhesive in intermittent pattern, I mention the following:

1. A smaller quantity of adhesive is used.

2. The pages have greater resistance to diagonal tension.

3. The intermittent coating of adhesive offers less resistance to rounding and backing in conventional machines, and

4. Conventional machines may be used.

I claim:

1. In the binding of books of the type having the pages secured together at the binding edge with adhesive, the improvement which comprises applying a coating of adhesive in intermittent pattern leaving parts of the binding edge covered with that adhesive and parts uncovered with that adhesive, rounding the binding edge, and applying another coating of adhesive over the rounded edge preliminary to applying crash.

2. In the method of claim 1, applying the adhesive in intermittent pattern so as to leave at least one-third of the total area of the binding edge uncovered therewith.

3. The method of binding books of the type having the binding edges held together with adhesive and the cover adhesively attached thereto, the improvement which comprises applying a penetrating adhesive to the flat binding edge, applying another adhesive thereover in an interrupted pattern which has a multiplicity of bare areas adjacent adhesive covered areas, subjecting the binding edge to a rounding operation which spreads the edges of the pages, and then applying another layer of adhesive over the rounded edge to cover the intermittent pattern preliminary to applying crash, whereby the last-applied adhesive penetrates the bare spaces between the spread edges and effects a strong binding with a reduced amount of adhesive.

4. The method of binding books of the type having the binding edges held together with adhesive and the cover adhesively attached thereto, the improvement which comprises applying an adhesive having relatively good penetrating properties to the flat binding edge, applying another layer of adhesive in a pattern form which has a multiplicity of bare areas adjacent adhesive covered areas, subjecting the binding edge to a rounding operation which spreads the edges of the pages, and then applying over the rounded binding edge a continuous layer of adhesive for securing the crash, said latter adhesive covering the entire binding edge, whereby the latter adhesive penetrates the spaces between the spread edges of the pages and effects a strong binding.

5. In the method of claim 4, applying the adhesive in pattern form in strips or stipples which leaves about one-half or more of the surface bare of said adhesive.

EDGAR L. BUDDEN.

REFERENCES CITED

The following references are of record in the file of this patent:

UNITED STATES PATENTS

Number	Name	Date
735,259	Hughes	Aug. 4, 1903
1,804,392	Alger et al.	May 12, 1931
2,069,211	Brown	Feb. 2, 1937
2,380,047	Hyman	July 10, 1945