(12) INTERNATIONAL APPLICATION PUBLISHED UNDER THE PATENT COOPERATION TREATY (PCT)

(19) World Intellectual Property Organization
International Bureau

(43) International Publication Date
12 December 2024 (12.12.2024)

WIPO | PCT

(10) International Publication Number
WO 2024/252239 A1

(51) International Patent Classification:
B60T 7/04 (2006.01) *G01D 11/24* (2006.01)
B60T 7/12 (2006.01) *G01D 5/14* (2006.01)
B60T 17/22 (2006.01) *G01D 15/12* (2006.01)

(21) International Application Number:
PCT/IB2024/055329

(22) International Filing Date:
31 May 2024 (31.05.2024)

(25) Filing Language: Italian

(26) Publication Language: English

(30) Priority Data:
102023000011307 05 June 2023 (05.06.2023) IT

(71) Applicant: **BREMBO S.P.A.** [IT/IT]; Via Brembo 25, I-24035 Curno (BG) (IT).

(72) Inventor: **TRUFFELLO, Martina**; c/o BREMBO S.P.A., Via Brembo 25, I-24035 Curno (BG) (IT).

(74) Agent: **PERRONACE, Andrea** et al.; c/o Jacobacci & Partners S.p.A., via Tomacelli, 146, I-00186 Roma (IT).

(81) Designated States *(unless otherwise indicated, for every kind of national protection available)*: AE, AG, AL, AM, AO, AT, AU, AZ, BA, BB, BG, BH, BN, BR, BW, BY, BZ, CA, CH, CL, CN, CO, CR, CU, CV, CZ, DE, DJ, DK, DM, DO, DZ, EC, EE, EG, ES, FI, GB, GD, GE, GH, GM, GT, HN, HR, HU, ID, IL, IN, IQ, IR, IS, IT, JM, JO, JP, KE, KG, KH, KN, KP, KR, KW, KZ, LA, LC, LK, LR, LS, LU, LY, MA, MD, MG, MK, MN, MU, MW, MX, MY, MZ, NA, NG, NI, NO, NZ, OM, PA, PE, PG, PH, PL, PT, QA, RO, RS, RU, RW, SA, SC, SD, SE, SG, SK, SL, ST, SV, SY, TH, TJ, TM, TN, TR, TT, TZ, UA, UG, US, UZ, VC, VN, WS, ZA, ZM, ZW.

(84) Designated States *(unless otherwise indicated, for every kind of regional protection available)*: ARIPO (BW, CV, GH, GM, KE, LR, LS, MW, MZ, NA, RW, SC, SD, SL, ST, SZ, TZ, UG, ZM, ZW), Eurasian (AM, AZ, BY, KG, KZ, RU, TJ, TM), European (AL, AT, BE, BG, CH, CY, CZ,

(54) Title: ARRANGEMENT FOR A LINEAR MAGNET FOR ELECTRONICALLY ASSISTED BRAKING SYSTEMS

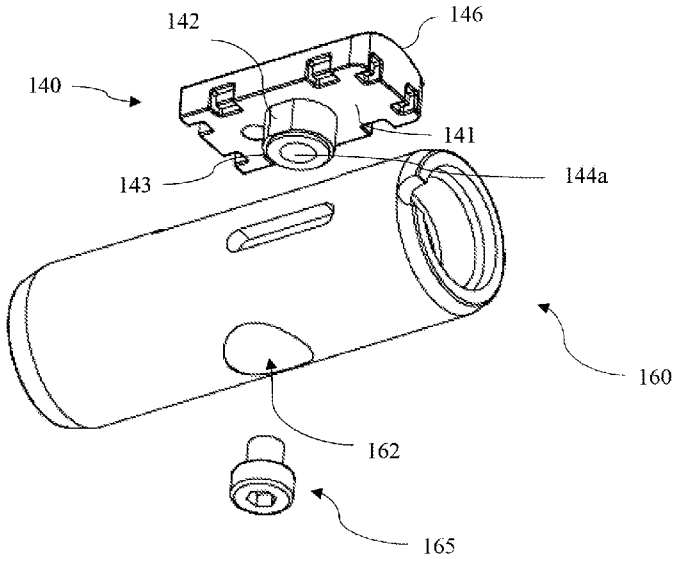

Fig. 8

(57) Abstract: Arrangement for a linear magnet for electronically assisted braking systems The present invention relates to a magnet housing device (140) for a linear position sensor installed on a sliding element in a longitudinal direction (Y), comprising : - a magnet housing body (145) with a first surface extending along said longitudinal direction (Y) and a second surface extending along said longitudinal direction (Y) opposite to the first surface; - a threaded bushing (143) projecting from said second surface; wherein the threaded bushing (143) has an outer bushing surface with a poka-yoke element (142), as well as a cylindrical opening (144a) in a direction perpendicular to said longitudinal direction (Y), said cylindrical opening (144a) having an inner thread. The present invention further relates to a foot brake which uses the magnet housing device (140) according to the invention.

WO 2024/252239 A1

[Continued on next page]

DE, DK, EE, ES, FI, FR, GB, GR, HR, HU, IE, IS, IT, LT, LU, LV, MC, ME, MK, MT, NL, NO, PL, PT, RO, RS, SE, SI, SK, SM, TR), OAPI (BF, BJ, CF, CG, CI, CM, GA, GN, GQ, GW, KM, ML, MR, NE, SN, TD, TG).

Published:

— *with international search report (Art. 21(3))*

— *in black and white; the international application as filed contained color or greyscale and is available for download from PATENTSCOPE*

Arrangement for a linear magnet for electronically assisted braking systems

---

To: Brembo S.p.A.
Inventor: Martina Truffello

[0001] The present invention relates to an arrangement for a linear magnet for electronically assisted braking systems.

Background art

[0002] Braking power boosters are used to reduce the actuation force of a brake of a vehicle, in particular a motorcar, in order to achieve a desired braking effect for the user. For such a purpose, vacuum brake boosters are usually installed on vehicles. Meanwhile, however, electric brake boosters have also been increasingly used in the corresponding braking systems. While in the case of vacuum brake boosters, the actuation of a brake pedal as a signal transmitter is transmitted mechanically to the brake booster, this is no longer the case with electric brake boosters (Brake-By-Wire ("BBW")). Therefore, sensor devices intended to detect the position or movement of the signal transmitter, in particular of the contactless type, are provided. Usually, one or more linearly movable permanent magnets, the magnetic field of which is detected by a fixed sensor, are used for such a purpose.

[0003] The use of linear stroke magnets (hereafter "linear magnets" for brevity) in braking systems, which

use position sensors, is thus known. Sometimes, such magnets have a linear extension themselves.

[0004] Linear magnets for position sensors are generally critical because of the axial dimensions of their stroke.

[0005] For example, in a product from the Sensify line of the Applicant (see Fig. 1), a magnet MG (MG indicates the area of the casing in which the magnet extends) with linear extension requires a total axial space of 37 mm along the direction AS. A length of 14 mm is related to the fixing zone in which a bushing BC (first constraint) is molded to ensure vibration resistance and durability of the magnet. A plastic pin GF (second constraint) is molded under the magnet itself to ensure the correct constraining of the component and tightening of the bolts. By virtue of the pin, the magnet is rotationally locked and vibrations are damped in cooperation with the constraint of the bushing, and the bending of the magnet as well as the risk of splitting the product are also avoided. The pin must be accommodated by another brake component, the so-called "float".

[0006] The magnet casing CM and the fixing geometry GF have a direct impact on piston cost and geometry. Moreover, it is necessary to ensure the orientation of the magnet installation to provide the correct magnetic field for the sensor. For this reason, a poka-yoke function was designed directly on the float. A design of this type has two main limitations: it requires significant axial space and increases the complexity of the piston and magnet design and thus the cost. Moreover,

this design is not suitable for motorcycle applications in which the dimensions are the main constraint to ensure that an electro-actuated pedal adequately replaces rear pedal pumps in mass production. Nor can the dimensions of the magnet be reduced because the position sensor using it would not provide the necessary measurement accuracy.

[0007] Other solutions on the market involve the integration of the sensor into the piston:

- Mando has developed a design (US9383279 B2) in which the magnet is coupled to the piston by means of a plastic ring. This type of design avoids the magnet from coming into contact with the brake fluid but increases the radial diameter; this is not suitable for brakes having a rigid volume constraint; and
- Bosch has developed a different device (DE102013214969 A1), in which the magnet has a too large axial stroke, is not in contact with brake fluid, and there is no integration of poka-yoke functionality.

[0008] In greater detail, document US9383279 B2 to Mando describes an installation structure of a stroke sensor of a brake pedal configured to measure the displacement of a movable element, which interacts according to a pressure force of a brake pedal. The pedal stroke sensor is provided with a detection element to detect in a contactless manner a change in displacement based on the movement of the movable part and is installed outside a housing, which allows the movable part to slide therein, the detection element being

provided with a sensor housing which is removably installed outside the housing, a Hall-effect integrated circuit provided in the sensor housing to detect the change in magnetic force, and a magnet housing provided in the sensor housing so as to move when facing the Hall-effect integrated circuit and on which a magnet is installed, as well as an elongated hole is formed through the outer surface of the housing in a direction in which the movable element moves, and the movable element is connected to the magnet housing using a connection element so that the movable element moves together with the magnet housing through the elongated hole. Fig. 2 shows Fig. 5 of the patent, in which the axial stroke of the magnet 140 is clearly visible.

[0009] Document DE102013214969 A1 to Bosch describes a retaining device for at least one permanent magnet, in particular a sensor device, comprising a retaining element which has at least one accommodation pocket to receive the at least one permanent magnet. According to the document, there is at least one leaf spring which is arranged on the retaining element so as to push the at least one permanent magnet into the accommodation pocket with a pretensioning force. Fig. 3 shows Fig. 3 of the patent, in which the axial extension of the magnet 3,4 is clearly visible.

[0010] Document EP 3 355 031 A1 describes a displacement-detecting apparatus mounted in a linear motion mechanism having a nut element and a rod coupled as a screw to the nut element to convert the rotary motion of the nut element into a rectilinear motion of

the rod to detect an axial displacement of the rod using a displacement sensor. The displacement detecting apparatus comprises: a permanent magnet arranged parallel to the rod and facing the displacement sensor; a magnetic block having a retaining portion which accommodates the permanent magnet, and a support portion formed continuously and integrally with the retaining portion and fixed to the rod; a casing having vertical wall portions parallel to an axis of the rod and housing the magnetic block between the pair of vertical wall portions; and biasing mechanisms interposed between the upright wall portions and the support portion, respectively. This solution is based on a screw coupling of the magnet, which under the high stresses of use results in the possibility of rotation of the magnet casing, no poka-yoke functionality being provided, the fixing screw being a fixing means subject to loosening and not a poka-yoke element. Moreover, the nut is provided in series with the linear magnet, increasing the axial size thereof.

[0011] Current designs of a linear magnet have the following problems:

- the axial size of the magnet is considerably large due to the design of the fixing with positioning in series with the linear magnet;
- the poka-yoke functionality (error-proof design) is ensured by the plastic casing for the fixing design, which cannot be removed;
- a plastic pin is introduced under the magnet to have an isostatic system and thus pass the vibration

resistance test; and

- the complexity and cost of piston design are related to the points listed above.

[0012] A need remains to improve the aspects listed, allowing the pedal curve to be selected based on the driving mode, as well as to arrange the braking system for braking by reducing stroke skips.

Purpose and object of the invention

[0013] It is the object of the present invention to provide an arrangement for a linear magnet for electronically assisted braking systems which overcomes the drawbacks and solves the problems of the prior art.

[0014] The present invention relates to a magnet housing device for electronically assisted braking systems according to the appended claims.

[0015] The present invention further relates to a foot brake which uses the magnet housing device of the invention, according to the appended claims.

Detailed description of embodiments of the invention

List of drawings

[0016] The invention will now be described by way of a non-limiting example, with particular reference to the figures in the accompanying drawings, in which:

- figure 1 shows as first solution of the prior art developed by the Applicant;
- figure 2 shows a second solution of the prior art developed by the Applicant;

- figure 3 shows a third solution of the prior art developed by the Applicant; and
- figure 4 shows an embodiment of the magnet housing device according to the invention, in multiple views;
- figure 5 shows an exploded view of a braking system using the magnet housing device according to the invention;
- figure 6 shows the braking system in Fig. 5, not exploded; and
- figure 7 shows the positioning of the magnet housing device according to the invention inside the float of the braking system in Figs. 5 and 6, according to an embodiment of the invention.

[0017] It is here specified that elements of different embodiments can be combined to provide further embodiments, without restrictions, by respecting the technical concept of the invention, as those skilled in the art will effortlessly understand from the description.

[0018] The present description also makes reference to the prior art for the implementation thereof in relation to the detail features not described, such as elements of minor importance usually used in the prior art in solutions of the same type, for example.

[0019] When an element is introduced, it is always understood that there can be "at least one" or "one or more".

[0020] When a list of elements or features is given in this description, it is understood that the finding

according to the invention "comprises" or alternatively "consists of" such elements.

[0021] When listing features in the same sentence or bullet list, one or more of the single features can be included in the invention without connection with the other features on the list.

Embodiments

[0022] The solution described below solves the main problems related to the previous design making the system suitable for application on motorcycles, in particular.

Magnet housing device

[0023] With reference to Fig. 4, the magnet housing device 140 has an elongated main body 145 in which a magnet (not shown) is positionable, with an upper surface 146 and a lower surface 141. A bushing 143 come out of the lower surface 141 in a projecting manner. In particular, the bushing 143 is positioned in a central region of the bottom surface 141.

[0024] In an embodiment, the housing 140 is molded from plastic in one piece, therefore both the main body 145 and the bushing 143 are molded from plastic.

[0025] The bushing 143 has a preferably cylindrical outer profile. However, the outer profile can have different shapes. Inside, however, there is a cylindrical threaded cavity 144a which is configured to engage the float of the braking system, as will be seen below.

[0026] According to a specific embodiment of the invention, the threaded cylindrical cavity is inside a ring 144 which protrudes in a projecting manner with respect to the outer profile of the bushing 143 so as to achieve a shape coupling in a corresponding shaped cavity of the float. The function of the protrusion 144 is to impose a single direction of magnet orientation.

[0027] Having an asymmetric geometry, the shape coupling allows a single orientation during assembly. Moreover, this prevents the relative rotation between float and magnet, when tightening the fixing screw.

[0028] The bushing 143, on the outer profile thereof, has a poka-yoke element, i.e., an element which ensures a correct and mistake-free assembly. For example, such a poka-yoke element can be a flat side 142 which breaks the cylindrical outer profile, as shown by way of example in the figure. Any other appropriate poka-yoke element is equally effective according to the invention.

[0029] Note that the threaded bushing 143 is molded under the magnet housing, instead of along the axial extension of the magnet as in Fig. 1 and generally in the prior art, and this ensures that the longitudinal size is reduced.

[0030] Advantageously, the poka-yoke function can be configured to provide at the same time an anti-rotation function for the bushing (and thus for the magnet) when the bushing is screwed to a screw for being fixed to the float (see further down in this description). This function is necessary so as not to reverse the polarity of the magnet when mounted on the float.

[0031] By way of example, the upper 146 and lower 141 surfaces extend longitudinally between a first end side 145 and a second end side 148. Moreover, there can also be recesses or "reliefs" 149 on the side surface which joins the upper surface to the lower surface, provided to lighten the component and direct the cooling of the magnet housing.

[0032] In an embodiment of the invention, the upper surface 146 can be bulged.

[0033] In an embodiment of the invention, the lower surface 141 can be flat.

[0034] The device 140 according to the invention can be used in a braking system with a brake pedal, as described below, but it can also be used for any linear position sensor installed on a sliding element (e.g., a piston).

Braking system

[0035] The present invention is adapted to be applied to a Brake-By-Wire ("BBW") type braking system of vehicles with two or more wheels, which is actuatable by a driver by means of a brake pedal or lever. Therefore, hereafter, the term "brake pedal" means indistinctly both a brake pedal for motorcars and the like and a brake lever for motorcycles, mopeds, and the like, unless otherwise specified.

[0036] With reference to Figs. 5 and 6, a braking system is generally indicated by reference numeral 100.

[0037] The braking system 100 comprises the following elements, which are better specified below:

- brake lever 150;
- absorber 171;
- absorber cap 122;
- absorber gaskets 123;
- float with slot 160;
- magnet housing device 140 with integrated magnet;
- magnetic sensor 130;
- elastic elements 121;
- reservoir 172;
- reservoir sealing elements 113;
- spring guide 114,112; and
- reservoir cap 111.

[0038] The braking system 100 comprises a reservoir 172 and an absorber 171. The reservoir 172 is configured to contain hydraulic fluid. The absorber 171 is configured to apply a reaction force to the brake pedal (not shown, connected to lever 150) against an actuation of the brake pedal. The absorber 171 is configured to contain hydraulic fluid.

[0039] According to an aspect of the invention, the reservoir 172 and the absorber 171 are directly fluidly connected to each other by means of a first hydraulic pipe (not shown). Such a first hydraulic pipe can comprise a calibrated orifice (not shown) interposed between the reservoir 172 and the absorber 171. Specifically, the calibrated orifice is configured to dampen a flow of hydraulic fluid passing between the absorber 171 and the reservoir 172. Advantageously, an actuation of the braking system 100 thus configured, in

response to an actuation of the brake pedal, conveys a flow of hydraulic fluid from the absorber 171 to the reservoir 172, which is damped by the calibrated orifice. Such a damping, in combination with the contrasting action of the absorber 171, implements the reaction force in response to a brake pedal actuation which emulates the stiffness curve of a conventional braking system. Advantageously, a braking assembly thus configured is more compact than the devices of the prior art and is adapted to be installable inside the passenger compartment of a vehicle, in both the hanging brake pedal configuration and in the grounded brake pedal configuration.

[0040] Indeed, the braking system thus configured lacks a master cylinder interposed between the reservoir 172 and the absorber 171 and thus has smaller overall dimensions and size.

[0041] Specifically, the braking system 100 thus configured is without hydraulic machines interposed between the reservoir 172 and the absorber 171. With added advantage, a braking system 100 thus configured minimizes the idle stroke of the system itself. Indeed, since the braking system 100 has no master cylinder interposed between the reservoir 172 and the absorber 171, an actuation of the brake pedal corresponds to an immediate actuation of the absorber 171. With added advantage, a braking system 100 thus configured has lower tolerances in the generation of the stiffness curve, because the tolerances inherent in a master cylinder, which is absent indeed, are canceled. With added

advantage, a braking system 100 thus configured is simplified compared to the prior art because it has no master cylinder. Such a simplification results in low costs and lower maintenance requirements. With added advantage, a braking system 100 thus configured has a greater safety, both real and perceived by the driver. Indeed, devices constantly subjected to high pressures, which would also require high dimensioning, are missing in the braking system 100 thus configured. Conversely, the braking system 100 thus configured is only subjected to a small transient pressure peak when the hydraulic fluid starts flowing from the absorber 171 to the reservoir 172.

[0042] The braking system 100 thus configured is configured to contain hydraulic fluid, with fluid continuity, inside the absorber 171 and the reservoir 172.

[0043] Therefore, in an operating configuration, the hydraulic fluid fills the absorber 171, the first hydraulic pipe, and at least partially the reservoir 172. Advantageously, the braking system 100 thus configured, with the absorber 171 in a hydraulic fluid bath, minimizes the idle stroke of the braking system itself.

[0044] According to an embodiment of the invention, the absorber 171 extends along an actuation axis Y, between a first absorber end 171a and an opposite second absorber end 171b.

[0045] According to an embodiment, the first hydraulic pipe extends along a direction substantially

transverse to the actuation axis Y. Advantageously, such a configuration reduces the overall size of the braking system 100.

[0046] According to an embodiment, the absorber 171 is configured to be connectable to the brake pedal, preferably at the first absorber end 171a. Moreover, the absorber 171 is configured to be actuatable by the brake pedal at the first absorber end 171a.

[0047] According to an embodiment, the absorber 171 is configured so that an actuation of the brake pedal 3 corresponds to a pressurization of the hydraulic fluid contained in the absorber 171, which conveys a flow of hydraulic fluid from the absorber 171 to the reservoir 172, through the first hydraulic pipe.

[0048] According to an embodiment, the absorber 171 comprises a peripheral wall 171c substantially extending in a direction parallel to the actuation axis Y, between the first absorber end 171a and the second absorber end 171b. The peripheral wall 171 defines a housing compartment therein (not shown), configured to contain the hydraulic fluid.

[0049] According to an embodiment, the reservoir 172 comprises a containment wall 172a and a bottom wall 172b. The bottom wall 172b is substantially transverse to the containment wall 172a. The bottom wall 172b and the containment wall 172a form a reservoir compartment configured to contain the hydraulic fluid.

[0050] According to an embodiment, the containment wall 172a forms a top-up opening. Preferably, the top-up opening is positioned opposite to the bottom wall

172b. The top-up opening is configured to allow topping up hydraulic fluid in the reservoir 172. The top-up opening is closable by reservoir sealing elements 113 and a cap 112.

[0051] According to an embodiment, the first hydraulic pipe extends through the bottom wall 172b of the reservoir 172 and the peripheral wall 171c of the absorber 171. The first hydraulic pipe thus fluidly connects the reservoir compartment to the housing compartment (not shown). Advantageously, such a configuration reduces the overall size of the braking system.

[0052] According to an embodiment, the reservoir 171 is fixed to the absorber 172.

[0053] According to an embodiment, the reservoir 171 is made in one piece with the absorber 172.

[0054] According to an embodiment, the bottom wall 172b extends in a plane substantially parallel to the actuation axis Y and the containment wall 172a is substantially transverse to the actuation axis Y. According to an embodiment, the bottom wall 172b of the reservoir 172 substantially coincides with a portion of the peripheral wall 171c of the absorber 171.

[0055] According to an embodiment, the reservoir 172 is at least partially interpenetrated with the absorber 171.

[0056] According to an embodiment, the bottom wall 172b of the reservoir 172 is at least partially interpenetrated with the peripheral wall 171a of the absorber 171.

[0057] According to an alternative embodiment, the reservoir 172 is distinct from the absorber 171. The fluid connection between the reservoir 171 and the absorber 172 is provided by the first hydraulic pipe.

[0058] Advantageously, the reservoir 172 thus configured is freely positionable and orientable with respect to the absorber 171.

[0059] According to an embodiment, the first hydraulic pipe comprises a flexible pipe (not shown), extending between the reservoir 172 and the absorber 171.

[0060] According to an embodiment, the absorber 171 comprises at least one elastic element 121 positioned inside the housing compartment (not shown). The at least one elastic element 121 is configured to apply a reaction force in response to an actuation of the braking system. Specifically, the at least one elastic element is configured to apply a reaction force to the brake pedal in response to an actuation of the brake pedal by a driver.

[0061] The at least one elastic element is configured to be biased along a direction substantially parallel to the actuation axis Y.

[0062] According to an embodiment, the absorber 171 comprises a plurality of elastic elements positioned in series and/or in parallel within the housing compartment.

[0063] According to an embodiment, the elastic elements 121 comprise a plurality of compression coil

springs positioned substantially coaxial to the actuation axis Y.

[0064] According to an embodiment, the elastic elements comprise Belville washers and/or square springs and/or torsion springs and/or strip springs and/or shaped springs.

[0065] According to an embodiment, in an operating configuration, the at least one elastic element 121 is immersed in the hydraulic fluid. Preferably, the plurality of compression coil springs positioned substantially coaxial to the actuation axis Y is immersed in the hydraulic fluid.

[0066] According to an embodiment, the braking system comprises a second hydraulic pipe (not shown) which fluidly connects the reservoir 171 to the absorber 172.

[0067] The second hydraulic pipe is distinct from the first hydraulic pipe.

[0068] Advantageously, the second hydraulic pipe is configured to allow faster return of hydraulic fluid from the reservoir 172 to the absorber 171 following the release of the actuation of the braking system 100.

[0069] According to an embodiment, the second hydraulic pipe comprises a non-return valve interposed between the reservoir 172 and the absorber 171. The non-return valve is configured to allow a flow of hydraulic fluid from the reservoir 172 to the absorber 171, and prevent a flow of hydraulic fluid from the absorber 171 to the reservoir 172. Therefore, during the actuation of the braking system 100, the absorber 171 pushes the hydraulic fluid toward the reservoir 172, through the

first hydraulic pipe and a calibrated gap, which implements a damping of the flow of hydraulic fluid. The non-return valve ensures that flow of hydraulic fluid from the absorber 171 to the reservoir 172 flows only through the first hydraulic pipe. Conversely, upon release of the braking system 100, the hydraulic fluid flows out to the absorber 171 more rapidly, because it flows out through both the first hydraulic pipe and the second hydraulic pipe.

[0070] According to an embodiment, the second hydraulic pipe extends parallel to the first hydraulic pipe. Advantageously, such a configuration reduces the overall size of the braking system.

[0071] According to an embodiment, the absorber 171 comprises a thrust shaft (not shown) therein (in the housing compartment). The thrust shaft is configured to be biased against the at least one elastic element in response to an actuation of the brake pedal.

[0072] According to an embodiment, the thrust shaft is configured to be translationally biased by the brake pedal along the actuation axis against the at least one elastic element. The absorber 171 thus applies a counteracting force against the actuation of the brake pedal.

[0073] According to an embodiment, the braking system comprises at least one sensor 130. The at least one sensor 130 is configured to detect an actuation and/or movement of the braking system 100, in cooperation with the magnet in the element 140, as will be discussed below.

[0074] According to an embodiment, the at least one sensor 130 is configured to detect the movement of at least one component of the braking system 100.

[0075] According to an embodiment, the at least one sensor 130 is configured to detect a movement of the thrust shaft within the absorber 171.

[0076] Preferably, the at least one sensor 130 is configured to detect a translation of the thrust shaft along the actuation axis Y. Advantageously, such a translation of the thrust shaft, actuatable by the brake pedal, can be correlated with the movement of the brake pedal by a driver. The movement of the brake pedal is usable to determine the braking force required by a driver from the braking system.

[0077] According to an embodiment, the at least one sensor 130 is either a Hall-effect position sensor or a magnetoresistive sensor or a linear magnetic sensor or a combination thereof, which utilizes the magnetic device 140 described above, for example.

[0078] According to an embodiment, the at least one sensor 130 (together with the device 140) is positioned inside the absorber 171. Preferably, the at least one sensor 130 is positioned inside the housing compartment.

[0079] According to an embodiment, the at least one sensor 130 is positioned connected to the thrust shaft.

[0080] According to an embodiment, the brake pedal is connected to the absorber 171 so that an actuation of the brake pedal corresponds to a pressurization of the hydraulic fluid contained in the absorber 171, which conveys a flow of hydraulic fluid from the absorber 171

towards the reservoir 172, through the first hydraulic pipe.

[0081] According to an embodiment, the brake pedal is connected to the absorber 171 by means of a mechanical connection, preferably by means of an articulated connection. An actuating force applied by a driver to the brake pedal is thus mechanically transferred to the absorber 171.

[0082] Advantageously, the connection between brake pedal and absorber 171 is without a hydraulic connection.

[0083] Specifically, the braking system 100 previously described is configured so that an actuation of the brake pedal by a driver corresponds to a reaction force applied by the braking system to the brake pedal against a brake pedal actuation, the force being implemented, for example, by the combined counteracting action of the absorber 171 and the calibrated orifice mentioned above, outside the system 100.

[0084] The absorber 171 is configured to generate a reaction force against an actuation of the brake pedal, e.g., by means of the at least one elastic element 121 configured to counteract the actuation of the brake pedal.

[0085] The calibrated orifice is configured to generate a damping force on the hydraulic fluid conveyed from the absorber 171 to the reservoir 172 through the first hydraulic pipe, under the actuation of the brake pedal, and such a damping force counteracts the actuation of the brake pedal.

[0086] The combined counteracting action of the absorber 171 and the calibrated orifice is configured to simulate the feel and stiffness of a brake pedal or lever of the conventional hydraulic braking systems. When the brake pedal is released, the hydraulic fluid previously conveyed from the absorber 171 to the reservoir 172 flows from the reservoir 172 to the absorber 171 passing through the first hydraulic pipe, and possibly also through the second hydraulic pipe.

[0087] According to an embodiment, the braking system 100 comprises at least one brake caliper. An electronic processing unit can be electrically connected to the braking system 100 and to the at least one brake caliper. The electronic processing unit is configured to actuate the at least one brake caliper upon detection, by the at least one sensor 130, of an actuation and/or movement of the braking system 100.

Mounting the magnetic housing device in the braking system

[0088] With reference to Figs. 7 and 8, how the magnet housing device 140 is inserted into an appropriate housing of the float 160 is shown. In particular, the bushing 143 is inserted into a corresponding cavity 162 (of a shape corresponding to the bushing, which is not necessarily cylindrical), which can be in a central region of the float, inside the larger recess 161 receiving the device 140.

[0089] Reference numeral 163 indicates a portion of the inner surface of the cavity or recess 162, which

corresponds to the poka-yoke element of the bushing 143. In particular, the portion 163 is a linear cut with respect to the circumference of the cylindrical cavity 162 (inside the recess 161) in the example shown.

[0090] In the cavity 162, which is a through cavity with respect to the float, a screw 165 can be inserted, which reaches the cylindrical opening 144a of the bushing 143 thus fixing the magnet housing 140 to the float 160.

[0091] According to an embodiment of the present invention, the threaded bushing 143 projects over a length p between 3 and 6 mm, even more preferably between 4 and 5 mm. This allows having a sufficient projecting portion for the poka-yoke anti-rotation mechanism, without risking bushing slippage or excessive stress.

[0092] According to a preferred embodiment of the present invention, the cylinder diameter d of said cylindrical bushing surface is between 6 and 10 mm. In this case, the distance r1 of the poka-yoke cut from the center of the cylinder is between 2.7 and 4.7.

[0093] More preferably, the cylinder diameter s of said cylindrical surface is between 7 and 9 mm, and in this case the distance r1 of the poka-yoke cut from the center of the cylinder is between 3.3 and 4.2. These values allow for and optimal poka-yoke operation because they provide a sufficient clamping surface for the stresses involved. The recess for the bushing and poka-yoke has corresponding dimensions.

[0094] Fig. 9 shows a section view of the bushing 143 fixed by means of the screw 165 to the float 160, which is mounted in the absorber 171.

[0095] Two or more of the parts (elements, devices, systems) described above can be freely associated and considered as a part kit according to the invention.

Advantages of the invention

[0096] The main advantages of the solution described above are:

- reducing the axial dimension of the component;
- ensuring a stronger fixing for the magnet (a safety-critical component); and
- simplify the piston design by reducing cost and axial size.

[0097] In such a respect, it should be noted that the dimension of the electro-actuated pedal is the most critical feature, for example for the design of motorcycle applications because it needs to remain as close as possible to the actual pedal master cylinders.

[0098] Preferred embodiments have been described above and variations of the present invention have been suggested, but it should be understood that those skilled in the art may make modifications and changes without departing from the related scope of protection, as defined by the appended claims.

CLAIMS

1. A magnet housing device (140) for a linear position sensor installed on a sliding element in a longitudinal direction (Y), comprising:

- a magnet housing body (145) with a first surface (146) extending along said longitudinal direction (Y) and a second surface (141) extending along said longitudinal direction (Y) opposite to the first surface;
- a threaded bushing (143) projecting from said second surface (141) in a direction perpendicular to said longitudinal direction (Y);

wherein the threaded bushing (143) has an outer bushing surface with a poka-yoke element (142), as well as an inner cylindrical opening (144a) in a direction perpendicular to said longitudinal direction (Y), said inner cylindrical opening (144a) having an inner thread configured to receive a fixing screw (165).

2. A device (140) according to claim 1, wherein the threaded bushing (143) projects over a length (p) between 3 and 6 mm.

3. A device (140) according to claim 1, wherein the threaded bushing (143) projects over a length (p) between 4 and 5 mm.

4. A device (140) according to one of claims 1 to 3, wherein said outer bushing surface is cylindrical.

5. A device (140) according to claim 4, wherein the cylinder diameter (d) of said cylindrical surface is between 6 and 10 mm.

6. A device (140) according to claim 5, wherein the distance (r1) of said cut from the center of the cylinder is between 2.7 and 4.7.

7. A device (140) according to claim 5 or 6, wherein the cylinder diameter (d) of said cylindrical surface is between 7 and 9 mm.

8. A device (140) according to claim 5, wherein the distance (r1) of said cut from the center of the cylinder is between 3.3 and 4.2.

9. A device (140) according to any one of claims 1 to 8, wherein said second surface (141) is flat.

10. A device (140) according to any one of claims 1 to 9, wherein said magnet housing body (145) and said bushing (143) are co-molded from plastic.

11. A device (140) according to any one of claims 1 to 10, wherein said bushing (143) is located in a central region of said second surface (141).

12. A device (140) according to any one of claims 1 to 11, wherein said bushing (143) has, within and with

respect to said outer bushing circumference, a protrusion (144) in a perpendicular direction, the protrusion (144) containing said inner cylindrical opening (144a).

13. A foot brake, comprising a pedal, a piston, a reservoir (172) configured to contain hydraulic fluid, an absorber (171) comprising a float (160) and configured to apply a reaction force to the brake pedal against an actuation of the brake pedal, a magnetic position sensor (130) installed on said absorber (171), wherein the magnetic sensor (130) comprises a magnet housing device (140) fixed, by shape coupling, to a float (160) configured to pressurize a hydraulic fluid,
the foot brake being characterized in that:

- the magnet housing device (140) is the device according to one of claims 1 to 12, with a bushing (143) having a poka-yoke element (142);
- said float (160) comprises a recess (161) configured to receive said magnet housing device (140), said recess (161) including a cavity (162) having a shape and dimensions corresponding to said bushing (143); and
- said shape coupling is configured so that said poka-yoke element (142) does not allow the rotation of said bushing (143) with respect to the float (160) and uniquely identifies the mutual position between float (160) and magnet housing device (140).

14. A foot brake according to claim 13, wherein the magnet housing device (140) comprises an inner cylindrical opening (144a) in the bushing (143) and is fixed to said float (160) by means of a screw (165) screwed into said inner cylindrical opening (144a).

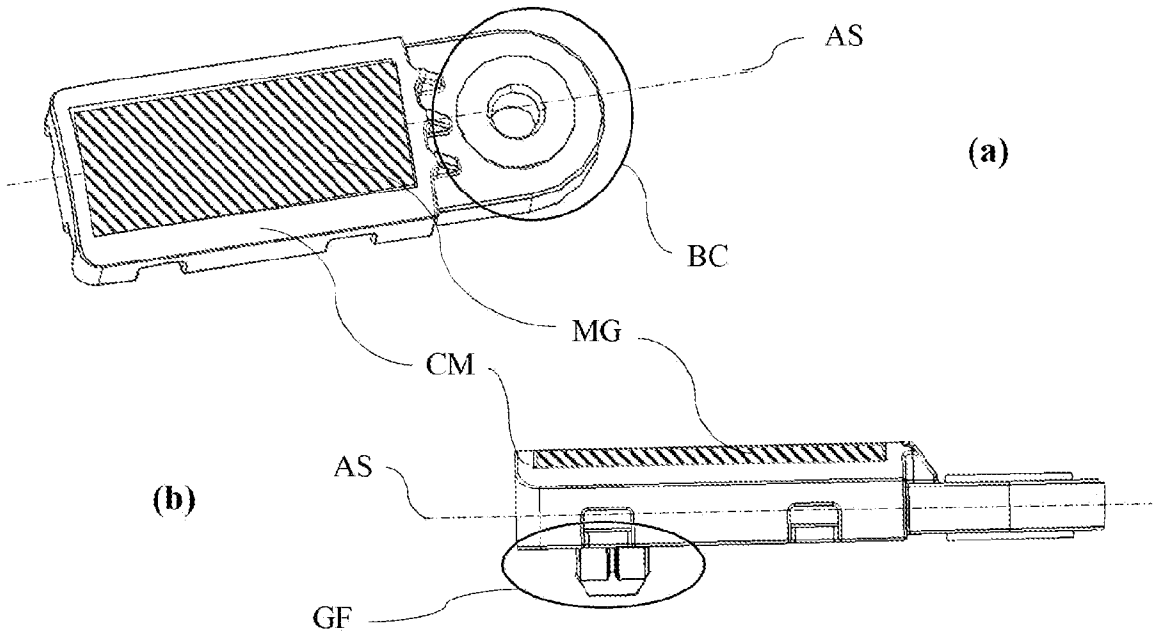

Fig. 1
(PRIOR ART)

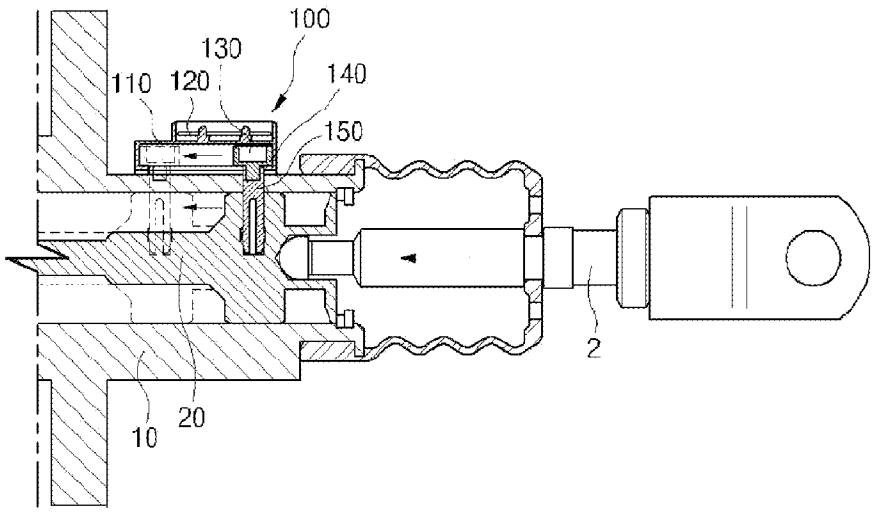

Fig. 2
(PRIOR ART)

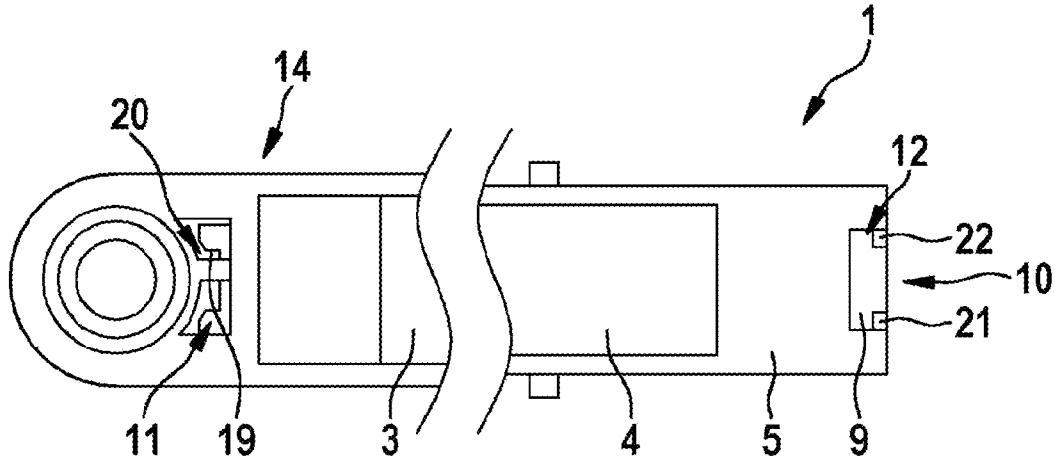

Fig. 3
(PRIOR ART)

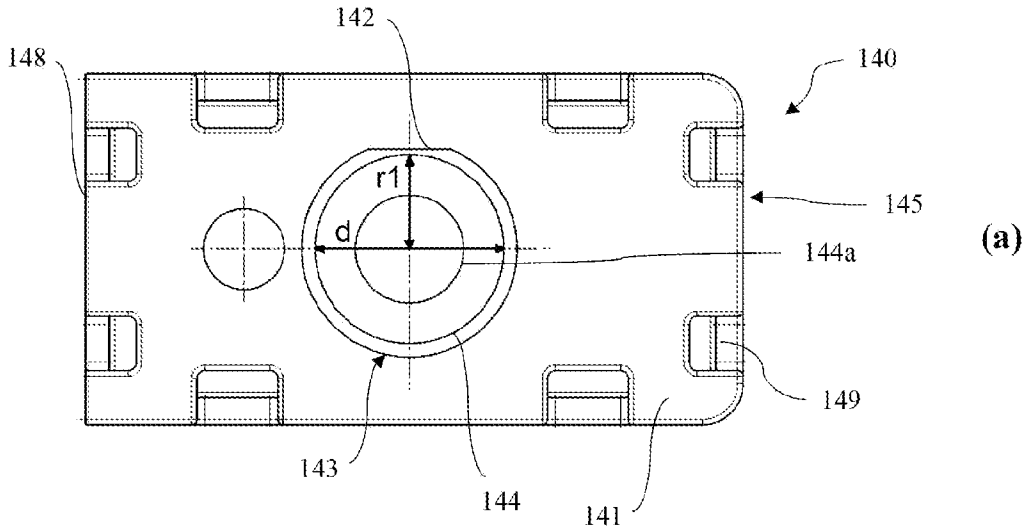

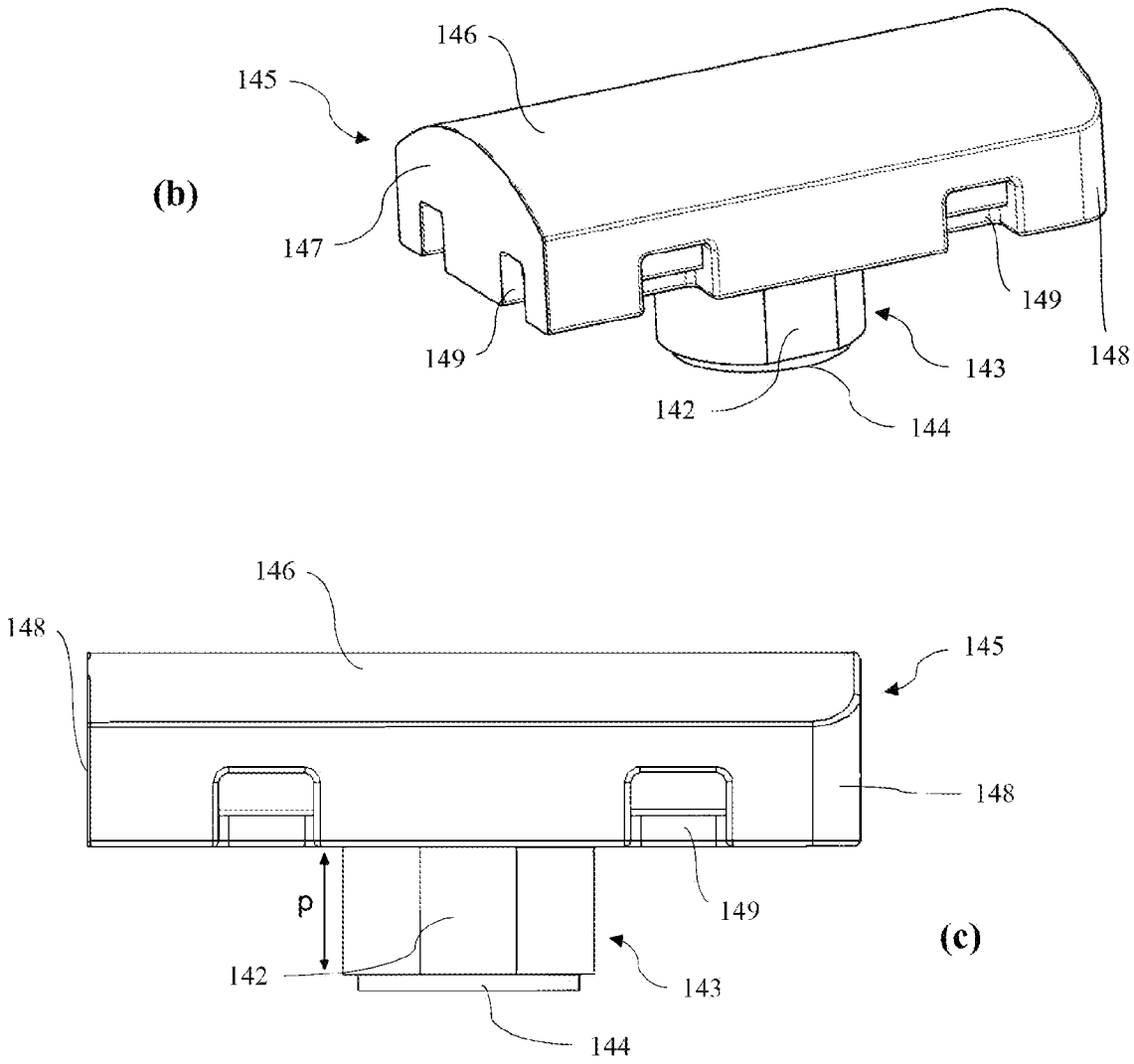
(b)
146
145
147
149
149
148
143
142
144
146
148
145
148
p
149
142
143
144
(c)

Fig. 4

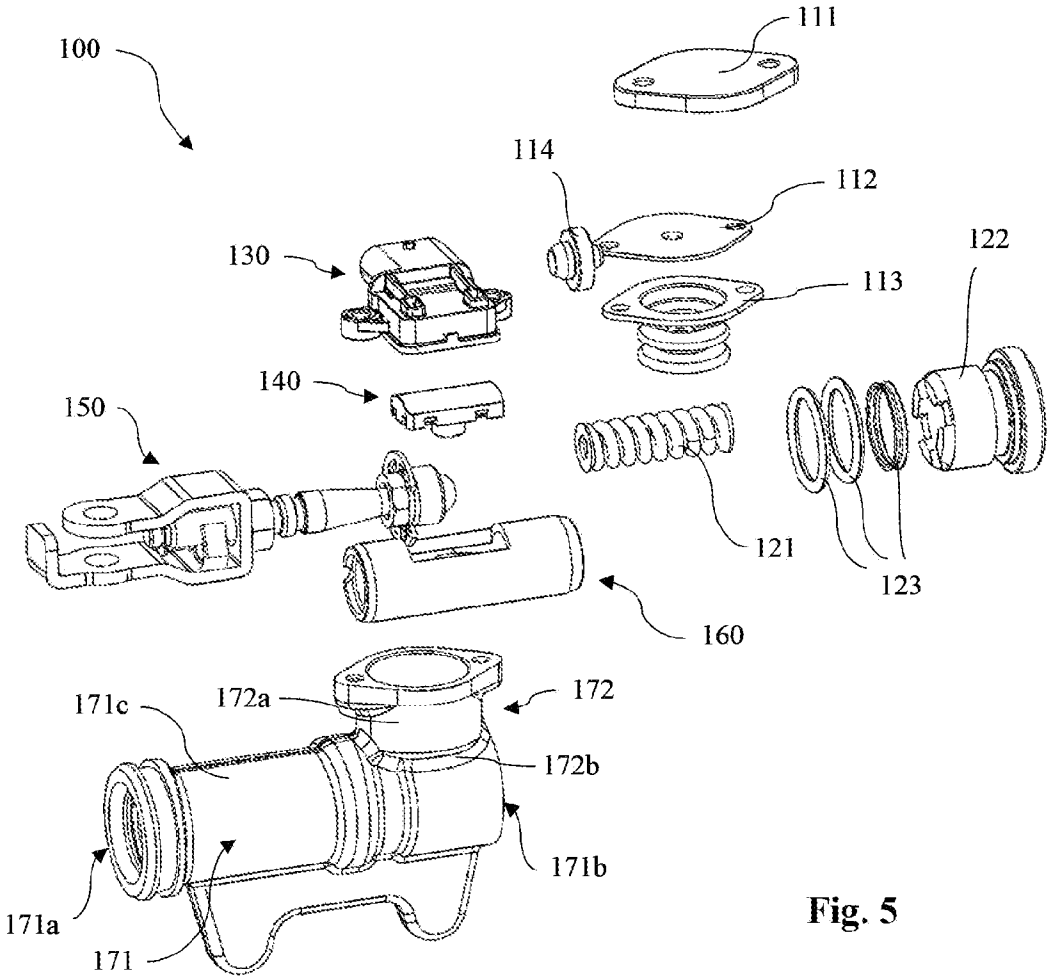
100
111
114
112
130
113
122
140
150
121
123
160
171c
172a
172
172b
171b
171a
171

Fig. 5

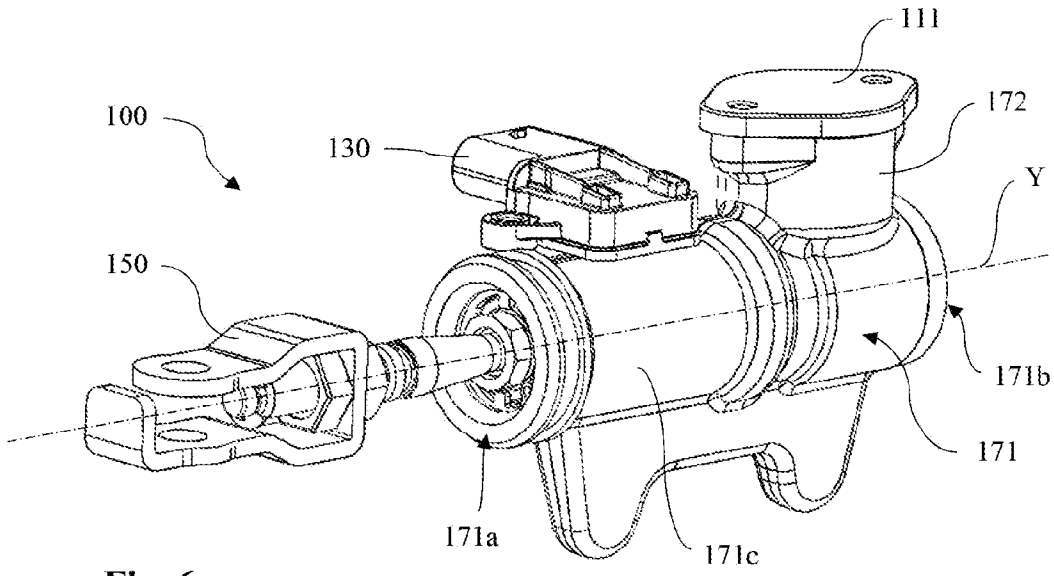
111
100
172
130
Y
150
171b
171
171a
171c

Fig. 6

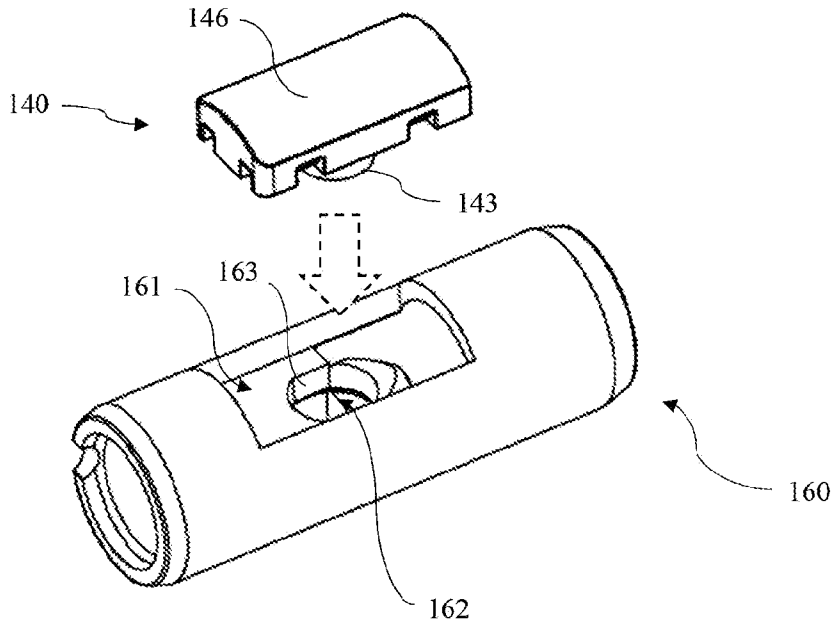

Fig. 7

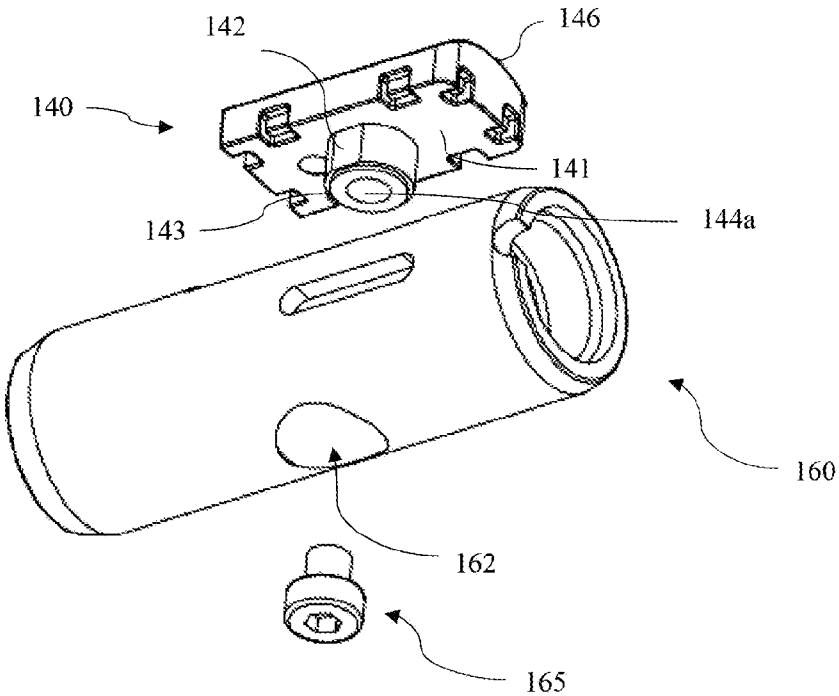

Fig. 8

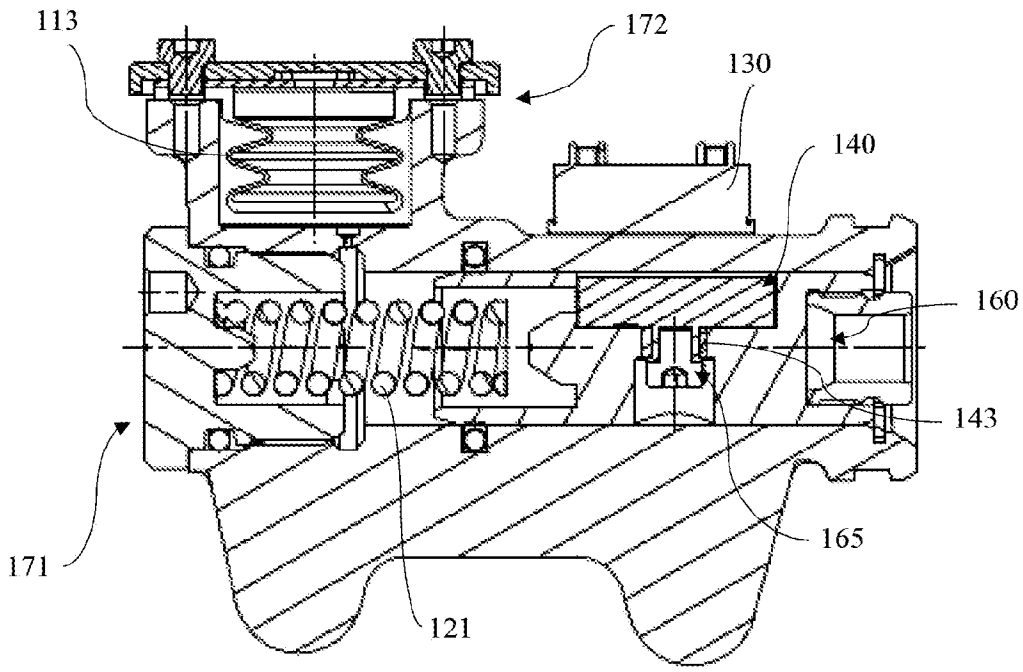

Fig. 9

INTERNATIONAL SEARCH REPORT

International application No
PCT/IB2024/055329

A. CLASSIFICATION OF SUBJECT MATTER

INV. B60T7/04 B60T7/12 B60T17/22 G01D11/24 G01D5/14
G01D15/12
ADD.

According to International Patent Classification (IPC) or to both national classification and IPC

B. FIELDS SEARCHED

Minimum documentation searched (classification system followed by classification symbols)

B60T G01D

Documentation searched other than minimum documentation to the extent that such documents are included in the fields searched

Electronic data base consulted during the international search (name of data base and, where practicable, search terms used)

EPO-Internal, WPI Data

C. DOCUMENTS CONSIDERED TO BE RELEVANT

Category*	Citation of document, with indication, where appropriate, of the relevant passages	Relevant to claim No.
X	EP 3 355 031 A1 (AISIN SEIKI [JP]) 1 August 2018 (2018-08-01) figure 1, 2, 4	1-14
A	US 2007/182403 A1 (VON HAYN HOLGER [DE] ET AL) 9 August 2007 (2007-08-09) the whole document	1-14
A	EP 3 620 754 A1 (KNORR BREMSE SYSTEME FUER NUTZFAHRZEUGE GMBH [DE]) 11 March 2020 (2020-03-11) the whole document	1-14
A	US 10 124 778 B1 (FORWERCK JOSHUA [US] ET AL) 13 November 2018 (2018-11-13) the whole document	1-14

-/--

[x] Further documents are listed in the continuation of Box C.

[x] See patent family annex.

* Special categories of cited documents :

"A" document defining the general state of the art which is not considered to be of particular relevance

"E" earlier application or patent but published on or after the international filing date

"L" document which may throw doubts on priority claim(s) or which is cited to establish the publication date of another citation or other special reason (as specified)

"O" document referring to an oral disclosure, use, exhibition or other means

"P" document published prior to the international filing date but later than the priority date claimed

"T" later document published after the international filing date or priority date and not in conflict with the application but cited to understand the principle or theory underlying the invention

"X" document of particular relevance;; the claimed invention cannot be considered novel or cannot be considered to involve an inventive step when the document is taken alone

"Y" document of particular relevance;; the claimed invention cannot be considered to involve an inventive step when the document is combined with one or more other such documents, such combination being obvious to a person skilled in the art

"&" document member of the same patent family

Date of the actual completion of the international search	Date of mailing of the international search report
24 July 2024	31/07/2024

Name and mailing address of the ISA/	Authorized officer
European Patent Office, P.B. 5818 Patentlaan 2 NL - 2280 HV Rijswijk Tel. (+31-70) 340-2040, Fax: (+31-70) 340-3016	Ranieri, Sebastiano

2

Form PCT/ISA/210 (second sheet) (April 2005)

INTERNATIONAL SEARCH REPORT

International application No
PCT/IB2024/055329

C(Continuation). DOCUMENTS CONSIDERED TO BE RELEVANT

Category*	Citation of document, with indication, where appropriate, of the relevant passages	Relevant to claim No.
A	US 2021/262829 A1 (MORIYA TAKAHIRO [JP] ET AL) 26 August 2021 (2021-08-26) the whole document	1-14
A	KR 101 524 489 B1 (CONTROL & MEASUREMENT SYSTEMS CO LTD [KR]) 2 June 2015 (2015-06-02) the whole document	1-14
A	JP 2022 088955 A (TDK CORP) 15 June 2022 (2022-06-15) the whole document	1-14

2

INTERNATIONAL SEARCH REPORT

Information on patent family members

International application No
PCT/IB2024/055329

Patent document cited in search report	Publication date	Patent family member(s)	Publication date
EP 3355031 A1	01-08-2018	EP 3355031 A1	01-08-2018
		JP 2018119937 A	02-08-2018
US 2007182403 A1	09-08-2007	AT E369276 T1	15-08-2007
		BR PI0409218 A	28-03-2006
		EP 1613519 A1	11-01-2006
		KR 20060006916 A	20-01-2006
		MX PA05010405 A	23-11-2005
		PL 1613519 T3	31-12-2007
		US 2007182403 A1	09-08-2007
		WO 2004089714 A1	21-10-2004
EP 3620754 A1	11-03-2020	BR 112021002893 A2	11-05-2021
		CN 112639408 A	09-04-2021
		EP 3620754 A1	11-03-2020
		JP 7137000 B2	13-09-2022
		JP 2021536006 A	23-12-2021
		US 2021348948 A1	11-11-2021
		WO 2020048818 A1	12-03-2020
US 10124778 B1	13-11-2018	US 10124778 B1	13-11-2018
		WO 2018231629 A1	20-12-2018
US 2021262829 A1	26-08-2021	CN 113295190 A	24-08-2021
		DE 102021103316 A1	26-08-2021
		JP 7184058 B2	06-12-2022
		JP 2021131358 A	09-09-2021
		US 2021262829 A1	26-08-2021
KR 101524489 B1	02-06-2015	NONE	
JP 2022088955 A	15-06-2022	JP 7196898 B2	27-12-2022
		JP 2022088955 A	15-06-2022