A. H. JAMES.

TROUSERS SUPPORTING DEVICE.

APPLICATION FILED OCT. 24, 1917.

1,380,210. Patented May 31, 1921.

Fig. 1.

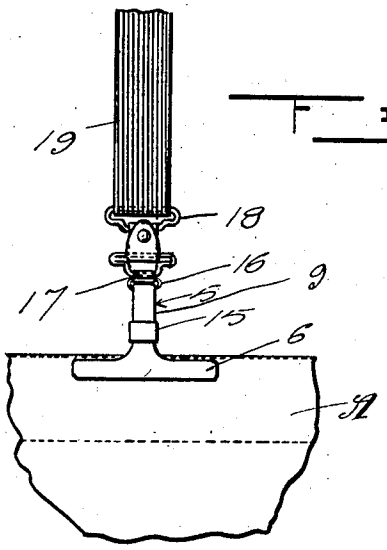

Fig. 2.

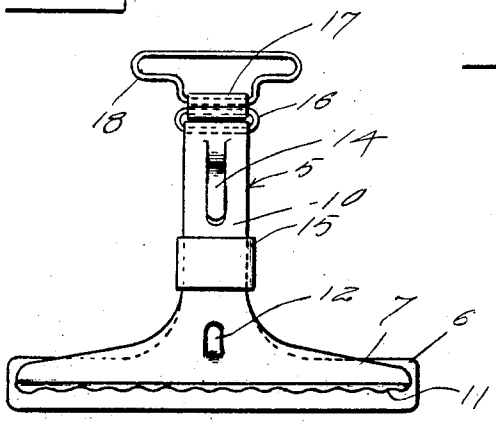

Fig. 3.

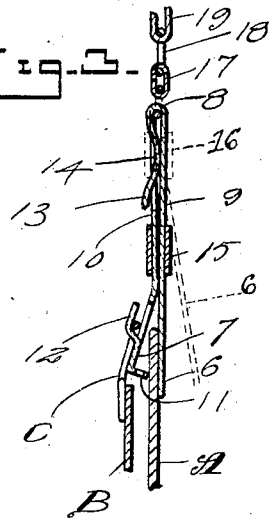

Fig. 4.

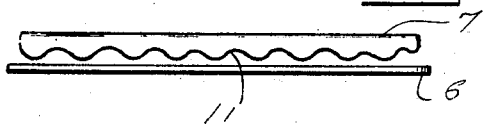

Inventor

A. H. James,

Witness

C. R. Beale

Jesse T. Dowling

By A. F. Randolph, Jr. Attorney

UNITED STATES PATENT OFFICE.

AMOS H. JAMES, OF ST. LOUIS, MISSOURI.

TROUSERS-SUPPORTING DEVICE.

1,380,210. Specification of Letters Patent. Patented May 31, 1921.

Application filed October 24, 1917. Serial No. 198,207.

To all whom it may concern:

Be it known that I, AMOS H. JAMES, a citizen of the United States, residing at St. Louis, in the State of Missouri, have invented certain new and useful Improvements in Trousers-Supporting Devices; and I do hereby declare the following to be a full, clear, and exact description of the invention, such as will enable others skilled in the art to which it appertains to make and use the same.

This invention relates to improvements in trousers supporting devices adapted for use in connection with suspenders.

A further object of this invention is to provide a trousers supporting device in the form of a clasp adapted to be removably secured to the tab of a suspender and equipped with means whereby it may be removably attached to the waist band of a pair of trousers and support the trousers or the like upon the person.

A still further object of this invention is to provide a supporting clasp so constructed as to render it applicable to trousers or the like, and provided with means whereby the string of the drawers may be attached thereto to retain the under garments and trousers in position.

A still further object of this invention is to provide a trousers supporting device of this character, which will be simple, practical and comparatively inexpensive in construction.

With these and other objects in view, the invention consists in the novel combination and arrangement of parts hereinafter more fully described and set forth in the claims hereto appended.

In the drawing—

Figure 1 is a front elevation of the trousers supporting device illustrating the application of the same to the waist band of a pair of trousers,

Fig. 2 is a rear elevation of the same detached from the trousers,

Fig. 3 is a vertical sectional view illustrating the manner in which the same is applied to a pair of trousers when in use, and

Fig. 4 is a view illustrating the construction of the teeth on one clamping member of the clasp.

Like numerals of reference designate corresponding parts in all the figures of the drawing.

Referring to the drawing, the character A designates a fragmentary portion of the waist band of a pair of trousers, while the character B designates the waist band of a pair of drawers having the usual supporting string C attached thereto.

My improved clasp is designated by the numeral 5 and it is composed of two spring jaws designated by the numerals 6 and 7 respectively. The jaw 6 is the outer jaw and the jaw 7 the inner jaw. The clasp is formed of a single piece of sheet metal looped intermediate its ends as at 8 to provide the jaws 6 and 7. The jaws have relatively narrow parallel body portions 9 and 10. The jaw 7 is bent to extend toward the jaw 6 and is serrated to provide the rounded teeth 11, which have abutting engagement with the inner face of the jaw 6. The waist line of the trousers A is rigidly secured between the jaws 6 and 7 when the device is in use. The body 10 of the jaw 7 is provided with a tongue 12 adapted for engaging the drawers string C. The body 10 is also provided with a longitudinally curved tongue 13. As illustrated in Fig. 3, the tongue 13 is provided with an inwardly extending portion 14 engaging the inner side of the body 9 and has its free ends extending beyond the outer face of the body. A locking ring 15 is slidably arranged on the body portions 9 and 10 and is adapted for locking the jaws 6 and 7 in an engaging position. As illustrated in dotted lines in Fig. 3, the band 15 may be slipped up over the tongue 13 and will cause the band to be held in the raised position and prevent it from accidentally slipping to the lower position while attaching the device to a garment.

A link 16 is arranged in the bight portion 8 between the bodies 9 and 10 and has a band 17 connected therewith. The connecting member 18 is adapted to be secured to a suspender tab 19 in the usual manner as illustrated in Fig. 1 of the drawing.

By reason of the rounded teeth 11, tearing or pulling of the trousers is eliminated.

Having thus described my invention, what I claim is:

1. A supporting device having clasp arms, a spring engaging one of the arms to urge them into separated relation at the clasping ends, a means acting counter to the spring to move said arms into clasp relation, said spring being compressible to permit passage of the said means over it, and said spring extending into the path of movement of the

means so as to prevent accidental return movement thereof after passage over said spring.

2. A supporting device comprising a one piece body having clasp arms, a ring to clamp said arms in clasp relation, said body having a slot, a spring on one of said arms extending through said slot and engaging the other arm to urge the arms into separated relation at the clasp ends, said spring also projecting into the path of movement of the ring, and being depressible into said slot so that the ring may be moved over it to enable the jaws to separate at the clasp ends, and said spring by its extension into the path of movement of the ring serving to prevent accidental return movement of the latter.

In testimony whereof I affix my signature in presence of two witnesses.

AMOS H. JAMES.

Witnesses:

CHAS. L. WILHELM,

THOMAS F. USHER.