(12) INTERNATIONAL APPLICATION PUBLISHED UNDER THE PATENT COOPERATION TREATY (PCT)

(19) World Intellectual Property Organization
International Bureau

(43) International Publication Date
3 July 2014 (03.07.2014)

WIPO | PCT

(10) International Publication Number
WO 2014/104796 A1

(51) International Patent Classification:
D06F 39/00 (2006.01) *A61L 2/10* (2006.01)

(21) International Application Number:
PCT/KR2013/012277

(22) International Filing Date:
27 December 2013 (27.12.2013)

(25) Filing Language: English

(26) Publication Language: English

(30) Priority Data:
10-2012-0156530
28 December 2012 (28.12.2012) KR
10-2012-0157230
28 December 2012 (28.12.2012) KR

(71) Applicant: **SEOUL VIOSYS CO., LTD.** [KR/KR]; 1B-36, 727-5, Wonsi-dong, Danwon-gu, Ansan-si, Gyeonggi-do 425-851 (KR).

(72) Inventors: **LEE, Chung Hoon**; 1B-36, 727-5, Wonsi-dong, Danwon-gu, Ansan-si, Gyeonggi-do 425-851 (KR). **YE, Kyung Hee**; 1B-36, 727-5, Wonsi-dong, Danwon-gu, Ansan-si, Gyeonggi-do 425-851 (KR). **CHO, Dae Sung**; 1B-36, 727-5, Wonsi-dong, Danwon-gu, Ansan-si, Gyeonggi-do 425-851 (KR). **KIM, Jong Rack**; 1B-36, 727-5, Wonsi-dong, Danwon-gu, Ansan-si, Gyeonggi-do 425-851 (KR). **SON, Young Hwan**; 1B-36, 727-5, Wonsi-dong, Danwon-gu, Ansan-si, Gyeonggi-do 425-851 (KR). **LEE, Seong Min**; 1B-36, 727-5, Wonsi-dong, Danwon-gu, Ansan-si, Gyeonggi-do 425-851 (KR). **YI, Jae Seon**; 1B-36, 727-5, Wonsi-dong, Danwon-gu, Ansan-si, Gyeonggi-do 425-851 (KR). **PARK, Jeong Yeol**; 1B-36, 727-5, Wonsi-dong, Danwon-gu, Ansan-si, Gyeonggi-do 425-851 (KR). **KOO, Jong Hyeon**; 1B-36, 727-5, Wonsi-dong, Danwon-gu, Ansan-si, Gyeonggi-do 425-851 (KR).

(74) Agent: **AIP PATENT & LAW FIRM**; Shinwon Building 8F, 813-14, Yeoksam-dong, Gangnam-gu, Seoul 135-933 (KR).

(81) Designated States *(unless otherwise indicated, for every kind of national protection available)*: AE, AG, AL, AM, AO, AT, AU, AZ, BA, BB, BG, BH, BN, BR, BW, BY, BZ, CA, CH, CL, CN, CO, CR, CU, CZ, DE, DK, DM, DO, DZ, EC, EE, EG, ES, FI, GB, GD, GE, GH, GM, GT, HN, HR, HU, ID, IL, IN, IR, IS, JP, KE, KG, KN, KP, KZ, LA, LC, LK, LR, LS, LT, LU, LY, MA, MD, ME, MG, MK, MN, MW, MX, MY, MZ, NA, NG, NI, NO, NZ, OM, PA, PE, PG, PH, PL, PT, QA, RO, RS, RU, RW, SA, SC, SD, SE, SG, SK, SL, SM, ST, SV, SY, TH, TJ, TM, TN, TR, TT, TZ, UA, UG, US, UZ, VC, VN, ZA, ZM, ZW.

(84) Designated States *(unless otherwise indicated, for every kind of regional protection available)*: ARIPO (BW, GH,

[Continued on next page]

(54) Title: WASHING MACHINE HAVING ULTRAVIOLET LIGHT-EMITTING DIODE

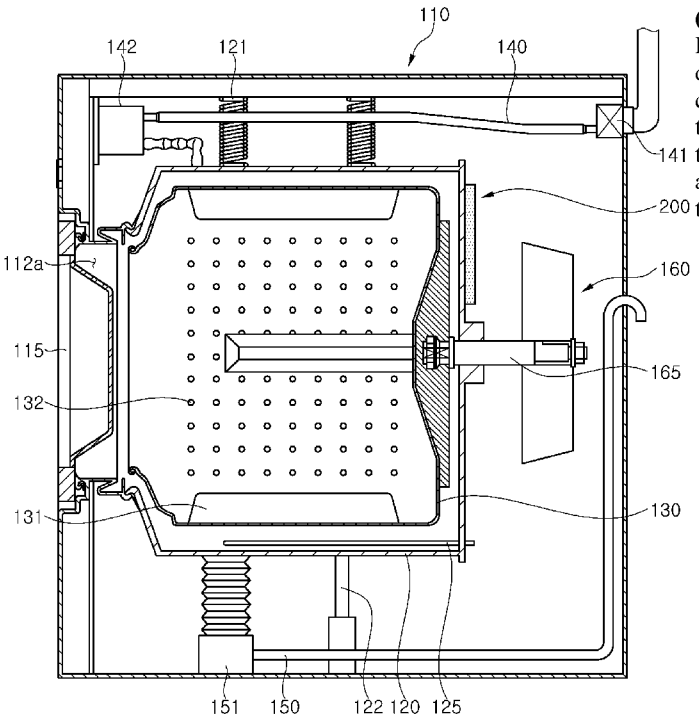

(57) Abstract: Provided is a washing machine using a UV LED, which can sterilize and deodorize the interior without dissembling the washing machine. The washing machine includes: a drum; a rotational shaft coupled to a rear surface of the drum; a tub compassing the drum; and a UV light-emitting unit disposed on a rear surface of the tub in a bar type and configured to sterilize and deodorize the rear surface of the drum and a periphery of the rotational shaft.

WO 2014/104796 A1

GM, KE, LR, LS, MW, MZ, NA, RW, SD, SL, SZ, TZ, UG, ZM, ZW), Eurasian (AM, AZ, BY, KG, KZ, RU, TJ, TM), European (AL, AT, BE, BG, CH, CY, CZ, DE, DK, EE, ES, FI, FR, GB, GR, HR, HU, IE, IS, IT, LT, LU, LV, MC, MK, MT, NL, NO, PL, PT, RO, RS, SE, SI, SK, SM, TR), OAPI (BF, BJ, CF, CG, CI, CM, GA, GN, GQ, GW, KM, ML, MR, NE, SN, TD, TG).

Published:

— *with international search report (Art. 21(3))*

Description

Title of Invention: WASHING MACHINE HAVING ULTRAVIOLET LIGHT-EMITTING DIODE

Technical Field

[1] The present invention relates to a washing machine using ultraviolet (UV) light-emitting diodes (LEDs), and more particularly, to a washing machine using UV LEDs capable of sterilizing and deodorizing laundry loaded into a drum.

Background Art

[2] In general, a washing machine is a device configured to remove dirt from laundry using the action of water and detergent.

[3] Washing machines are classified into agitation-type, vortex-type, and drum-type washing machines.

[4] The agitation-type washing machine rotates a washing rod, which protrudes from the center of the washing tub, leftwards/rightwards to wash the laundry. The vortex-type washing machine rotates a rotation blade of a disk shape, which is formed on a lower portion of a washing tub, leftwards/rightwards so that the resulting friction between water flow and laundry washes the laundry. The drum-type washing machine rotates a drum, after water, detergent, and laundry are put into a drum, to wash the laundry.

[5] The drum-type washing machine includes a cabinet, which defines the exterior, a tub mounted into the cabinet and configured to contain washing water, a drum positioned inside the tub to contain laundry, and a motor and a shaft positioned on the rear surface of the tub to rotate the drum.

[6] A conventional drum-type washing machine uses tap water, the calcium of which interacts with the surfactant of detergent, generating insoluble metal soap. The insoluble metal soap easily adheres to the inner/outer wall of the drum or to the inner wall of the tub, and fiber residues or dirt separated from the laundry tends to adhere to the insoluble metal soap and increase its size. Furthermore, the insoluble metal soap absorbs moisture and results in multiplication of mold and microorganisms and generation of a flocculent precipitate, which causes decomposition. As such, conventional drum-type washing machines may have odor generated by the mold, microorganisms and precipitate, which can also be suspended in water during the washing process and adhere to and contaminate the laundry.

[7] The contaminated laundry causes germs and odor, which degrade the reliability of washing and can even threaten the health of uses with weak immunity.

Disclosure of Invention

Technical Problem

[8] An aspect of the present invention is directed to a washing machine using UV LEDs capable of sterilizing and deodorizing the interior without dissembling the washing machine.

[9] Another aspect of the present invention is directed to a washing machine using UV LEDs capable of sterilizing and deodorizing laundry loaded into the drum.

Solution to Problem

[10] According to an embodiment of the present invention, a washing machine using an ultraviolet light-emitting diode includes: a drum; a rotational shaft coupled to a rear surface of the drum; a tub compassing the drum; and a UV light-emitting unit disposed on a rear surface of the tub in a bar type and configured to sterilize and deodorize the rear surface of the drum and a periphery of the rotational shaft.

[11] The UV light-emitting unit may include: a blocking member configured to interrupt outflow of washing water; a UV LED unit configured to emit UV light; and a frame configured to contain the blocking member and the UV LED unit and coupled to the tub.

[12] A first through-hole may be formed on the frame in an area corresponding to a UV LED element of the LED unit.

[13] A second through-hole may be formed on the rear surface of the tub in an area corresponding to the first through-hole.

[14] The washing machine may further include: a receiving recess compassing a periphery of the first through-hole; and an locking recess, into which the blocking member is inserted, the locking recess including the receiving recess.

[15] The blocking member may include: a packing contained in the receiving recess; and a protection cover inserted into the locking recess.

[16] The protection cover may be one of transparent quartz and Pyrex.

[17] The second through-hole may have an inclined inner surface.

[18] The LED unit may have a waterproofing function, and the blocking member may be a V-packing.

[19] The UV light-emitting unit may include a heat sink on a lower surface.

[20] The washing machine may further include a cooling water unit configured to dissipate heat from the heat sink.

[21] A protection cover and a weight compensation member may be provided on a lower surface of the UV light-emitting unit.

[22] The washing machine may further include: a second UV light-emitting unit positioned on an upper surface of the tub; and a third UV light-emitting unit positioned on a front surface of the tub.

[23] According to another embodiment of the present invention, a washing machine using

a UV LED includes: a drum; a plurality of lifters protruding inside the drum; and a UV light-emitting unit having a plurality of UV LED arrays installed on ends of the plurality of lifters, respectively.

[24] The UV light-emitting unit may include: a plurality of UV LED driving units connected to the plurality of UV LED arrays one by one and configured to separately drive the plurality of UV LED arrays; a control unit configured to control the plurality of UV LED driving units; an object detection unit configured to sense whether laundry exists in the drum; a position sensor unit configured to sense the position of the laundry; and a weight sensor unit configured to sense the weight of the laundry.

[25] Each of the plurality of UV LED arrays may include a plurality of UV LEDs and at least one white LED.

[26] The UV LEDs may have an interval of 0.5 cm or less between adjacent UV LEDs.

[27] The UV LEDs may have a maximum peak wavelength band at 200 to 350 nm.

[28] The UV LEDs may have a maximum peak wavelength band at 265 to 340 nm.

[29] Each of the plurality of UV LED arrays may include: a substrate; a plurality of UV LEDs mounted on the substrate; first and second wirings positioned on both end surfaces of the lifter; first and second guide barriers compassing both side peripheries of the substrate and outer surfaces of the first and second wirings; and a protection cover provided between the first and second guide barriers.

[30] First and second receiving recesses may be provided on inner surfaces of the first and second guide barriers, the protection cover being inserted into the first and second receiving recesses.

[31] The protection cover may include a diffusion agent or a diffusion pattern.

[32] According to another embodiment of the present invention, a washing machine using a UV LED includes: a plurality of lifters protruding inside a drum; a plurality of UV LED arrays installed on ends of the plurality of lifters, respectively, and configured to sterilize and deodorize laundry loaded into the drum; and a plurality of UV LED driving units connected to the plurality of UV LED arrays one by one and configured to separately drive the plurality of UV LED arrays.

[33] The washing machine may further include a control unit configured to control the plurality of UV LED driving units.

[34] The washing machine may further include an object detection unit configured to sense whether laundry exists in the drum.

[35] The washing machine may further include a position sensor unit configured to sense the position of the laundry.

[36] The washing machine may further include a weight sensor unit configured to sense the weight of the laundry.

[37] Each of the plurality of UV LED arrays may include: a substrate; a plurality of UV

LEDs mounted on the substrate; first and second wirings positioned on both end surfaces of the lifter; first and second guide barriers compassing both side peripheries of the substrate and outer surfaces of the first and second wirings; and a protection cover provided between the first and second guide barriers.

[38] First and second receiving recesses may be provided on inner surfaces of the first and second guide barriers, the protection cover being inserted into the first and second receiving recesses.

[39] The protection cover may include a diffusion agent or a diffusion pattern.

Advantageous Effects of Invention

[40] According to embodiments of the present invention, the washing machine according to the present invention is advantageous in that it has a UV light-emitting unit provided on the rear surface of the tub and configured to sterilize and deodorize the rear surface of the drum and the periphery of the rotational shaft, thereby removing mold, microorganisms, and precipitates effectively, improving the performance and reliability of the washing machine, and lengthening the life.

[41] In addition, the present invention is provided with a UV light-emitting unit, which uses various heat dissipation members and thus has excellent heat dissipation besides sterilization and deodorization, thereby preventing decrease of life of UV LED elements resulting from heat.

[42] In addition, the present invention is provided with first to third UV light-emitting units configured to sterilize and deodorize the front, upper, and rear surfaces of the tub, thereby removing mold, microorganisms, and precipitates effectively, improving the performance and reliability of the washing machine, and lengthening the life.

[43] According to embodiments of the present invention, the washing machine according to the present invention determines whether laundry exists inside the drum, detects information regarding the position, weight, and the like of the laundry, and separately controls the first to third UV LED arrays configured to sterilize and deodorize the laundry, thereby sterilizing and deodorizing the laundry effectively while minimizing damage to the laundry.

Brief Description of Drawings

[44] FIG. 1 is a sectional view illustrating a washing machine according to a first exemplary embodiment of the present invention.

[45] FIG. 2 is a top view illustrating a rear surface of a tub of FIG. 1.

[46] FIG. 3 is an exploded perspective view illustrating a UV light-emitting unit of FIG. 1.

[47] FIG. 4 is a sectional view illustrating a UV light-emitting unit of FIG. 1.

[48] FIG. 5 is a sectional view illustrating a UV light-emitting unit according to a second

exemplary embodiment of the present invention.

[49] FIG. 6 is a perspective view illustrating a UV light-emitting unit according to a third exemplary embodiment of the present invention.

[50] FIG. 7 is a perspective view illustrating a UV light-emitting unit according to a fourth exemplary embodiment of the present invention.

[51] FIG. 8 is a perspective view illustrating a UV light-emitting unit according to a fifth exemplary embodiment of the present invention.

[52] FIG. 9 is a sectional view illustrating a washing machine according to a sixth embodiment of the present invention.

[53] FIG. 10 is a sectional view illustrating a washing machine according to a seventh exemplary embodiment of the present invention.

[54] FIG. 11 is a sectional view illustrating a lifter and a UV LED array of FIG. 10.

[55] FIG. 12 is a sectional view illustrating a drum of FIG. 10 and the interior of the drum.

[56] FIG. 13 is a diagram illustrating a schematic configuration of a UV light-emitting unit according to the present invention.

[57] FIG. 14 is a diagram illustrating UV LED driving units and UV LED arrays of FIG. 13.

Best Mode for Carrying out the Invention

[58] Exemplary embodiments of the present invention will be described below in detail with reference to the accompanying drawings. These embodiments are provided so that this disclosure will be thorough and complete, and will fully convey the scope of the invention to those skilled in the art. The invention may, however, be embodied in many different forms and should not be construed as being limited to the embodiments set forth herein. In the drawings, the widths, lengths and thicknesses of elements may be exaggerated for clarity. Throughout the drawings and description, like reference numerals will be used to refer to like elements.

[59] FIG. 1 is a sectional view illustrating a washing machine according to a first exemplary embodiment of the present invention, and FIG. 2 is a top view illustrating a rear surface of a tub of FIG. 1.

[60] As illustrated in FIGS. 1 and 2, a washing machine according to a first exemplary embodiment of the present invention includes a cabinet 110, which defines the exterior, a tub 120 positioned inside the cabinet 110 and configured to contain washing water, and a drum 130 positioned inside the tub 120 and configured to rotate.

[61] The cabinet 110 has an introduction opening 112a on a front surface so that laundry can be moved in and out. The introduction opening 112a has a door 115 used to open/close the introduction opening 112a.

[62] The cabinet 110 may further include an input unit (not illustrated) on a front surface so that the user can manipulate it. That is, the input unit may be installed on the periphery of the door 115. The user can manipulate the input unit and select from various courses of the washing machine. The input unit may further include a display unit.

[63] The tub 120, which is provided inside the cabinet 110, may include at least one spring 121 on an upper portion. The spring 121 may be provided between the upper portion of the tub 120 and the inner surface of the cabinet 110. A damper 122 may be provided on the lower portion of the tub 120. The spring 121 and the damper 122 are configured to support the tub 120 and reduce vibration, which is transmitted to the tub 120 during high-speed rotation of the drum 130.

[64] The drum 130 can rotate about a penetration shaft extending through the center of the introduction opening 112a inside the tub 120. The drum 130, by means of its rotation function, can perform washing, rinsing, and dewatering.

[65] The drum 130 has, on an inner surface, a plurality of lifters 131 protruding in the inward direction at a predetermined interval. The lifters 131 are configured to lift laundry up to a predetermined position.

[66] The drum 130 has a number of through-holes 132 formed on an inner surface. The through-holes 132 provide space through which washing water can flow into and out of the drum 130 during washing, rinsing, and dewatering.

[67] The cabinet 110 also includes, inside it, a water supply hose 140 configured to supply water into the tub 120 from an external water source, a water supply valve 141 configured to control the amount of water supplied through the water supply hose 140, and a detergent supply device 142 configured to introduce detergent so that the water, which is supplied through the water supply hose 140, can be introduced into the tub 120 together with detergent.

[68] The cabinet 110 also includes a water discharge hose 150 and a water discharger pump 151, which are configured to discharge washing water to the outside during washing, rinsing, and dewatering.

[69] The cabinet 110 includes, on a rear end, a driving unit 160 configured to rotate the drum 130, and the driving unit 160 may be a motor, for example. The driving unit 160 rotates the drum 130 through a rotational shaft 165, which is coupled to the drum 130.

[70] The washing machine can use heated water, during washing and rinsing, according to the user's selection or the option of a preset course. The heated water can be provided by a heater 125 positioned inside the cabinet 110.

[71] The tub 120 has, on a rear surface, a UV light-emitting unit 200 formed in a bar type and configured to sterilize and deodorize the drum 130.

[72] The UV light-emitting unit 200 is installed on the rear surface of the tub 120 above

the rotational shaft 165 at a predetermined distance from the rotational shaft 165. Although the position of the UV light-emitting unit 200 is not limited specifically, it is preferably installed above the rotational shaft 165 and thus protected from moisture.

[73] The UV light-emitting unit 200 is driven together with rotation of the drum 130 and sterilizes and deodorizes the lower surface of the drum 130 in a scanning mode.

[74] The UV light-emitting unit 200 will be described in detail with reference to FIGS. 3 and 4.

[75] FIG. 3 is an exploded perspective view illustrating the UV light-emitting unit of FIG. 1, and FIG. 4 is a sectional view illustrating the UV light-emitting unit of FIG. 1.

[76] Referring to FIGS. 1, 3 and 4, the UV light-emitting unit 200 includes a blocking member configured to interrupt the outflow of washing water, a UV LED unit 250, and a frame 210 coupled to the tub 120 and configured to contain the blocking member and the UV LED unit 250.

[77] The blocking member includes O-rings 240 and protection covers 230. The protection covers 230 may be made of transparent quartz or Pyrex.

[78] The O-rings 240 are not limited specifically, and may include any packing made of rubber or plastic.

[79] The UV LED unit 250 includes a plurality of UV LED elements 253 configured to emit light in a UV wavelength band of 200 to 400 nm and a substrate 251 on which the plurality of UV LED elements 253 are mounted.

[80] The frame 210 includes a plurality of first through-holes 211 so that UV light from the plurality of UV LED elements 253 can be transmitted.

[81] The frame 210 has the O-rings 240 and the protection covers 230 on one side surface and the UV LED unit 250 on the other side surface.

[82] The tub 120 includes, on a rear surface, a square protrusion 124 protruding in an area, which corresponds to the UV light-emitting unit 200, for primary coupling with the frame 210; second through-holes 126 extending through the rear surface of the tub 120 so that UV light from the UV LED elements 253 can be directed to the rear surface of the drum 130; and receiving recesses 128 compassing the periphery of the second through-holes 126.

[83] The second through-holes 126 may have inner surfaces slanted so as to correspond to the radiation angle of UV light from the UV LED elements 253.

[84] The tub 120 further includes, on a rear surface, locking recesses 127, into which the protection covers 230 are inserted, including the receiving recesses 128.

[85] The O-rings 240 and the protection covers 230 according to the present invention are aligned with the receiving recesses 128 and the locking recesses 127, respectively; the frame 210 is primarily coupled by the square protrusion 124; and the frame 210 may be secondarily fixed to the tub 120 by a screw or hook structure.

[86] The UV LED unit 250 is coupled to the lower surface of the frame 210, completing the assembly process.

[87] As described above, the washing machine according to an embodiment of the present invention has a UV light-emitting unit 200 provided on the rear surface of the tub 120 and configured to sterilize and deodorize the rear surface of the drum 130 and the periphery of the rotational shaft 135, thereby removing mold, microorganisms, and precipitates effectively, improving the performance and reliability of the washing machine, and lengthening the life.

[88] FIG. 5 is a sectional view illustrating a UV light-emitting unit according to a second exemplary embodiment of the present invention.

[89] As illustrated in FIG. 5, the UV light-emitting unit 300 according to the second exemplary embodiment of the present invention includes a UV LED unit 350 having a waterproofing function, O-rings 340, and a frame 310.

[90] The UV LED unit 350 includes a plurality of UV LED elements 353 configured to emit light in a UV wavelength band of 200 to 400 nm and a substrate 351 on which the plurality of UV LED elements 353 are mounted.

[91] The tub 220 includes a protrusion 224 configured to surround the outer surface of the frame 310 so as to primarily fix the frame 310 and through-holes 226 configured to provide space so that UV light from the UV LED elements 353 can be transmitted into the tub 220.

[92] The through-holes 226 may have inner surfaces slanted so as to correspond to the radiation angle of the UV LED elements 353.

[93] The washing machine according to the second exemplary embodiment of the present invention has a UV light-emitting unit 300 provided on the rear surface of the tub 220 and configured to sterilize and deodorize the rear surface of the drum and the periphery of the rotational shaft, thereby removing mold, microorganisms, and precipitates effectively, improving the performance and reliability of the washing machine, lengthening the life, and reducing the cost by a simpler configuration than the UV light-emitting unit 200 (FIG. 4) according to the first exemplary embodiment.

[94] FIG. 6 is a perspective view illustrating a UV light-emitting unit according to a third exemplary embodiment of the present invention, FIG. 7 is a perspective view illustrating a UV light-emitting unit according to a fourth exemplary embodiment of the present invention, and FIG. 8 is a perspective view illustrating a UV light-emitting unit according to a fifth exemplary embodiment of the present invention.

[95] FIGS. 6 to 8 illustrate UV light-emitting units according to third to fifth exemplary embodiments of the present invention, respectively, which further include a configuration for heat dissipation.

[96] Referring to FIG. 6, the UV light-emitting unit according to the third exemplary em-

bodiment of the present invention has the same configuration as the above-described UV light-emitting unit 200 (FIG. 3) according to the first exemplary embodiment of the present invention, except for a heat sink 450, so the same components are given the same reference numerals, omitting repeated descriptions thereof.

[97] The heat sink 450 may be installed on the rear surface of the UV LED unit 250.

[98] The heat sink 450 may make a surface contact with the other side of the substrate symmetrical with one side of the substrate, on which UV LED elements (not illustrated) are mounted.

[99] Referring to FIG. 7, the UV light-emitting unit according to the fourth exemplary embodiment of the present invention has the same configuration as the above-described UV light-emitting unit (FIG. 6) according to the third exemplary embodiment of the present invention, except for a cooling tube 510 configured to cool the heat sink 450, a branch tube 530, and a cooling water supply hose 520, so the same components are given the same reference numerals, omitting repeated descriptions thereof.

[100] The cooling tube 510 may be inserted into the heat sink 450.

[101] The UV light-emitting unit according to the fourth exemplary embodiment is advantageous in that use of cooling water maximizes heat conduction from the heat sink 450 and facilitates heat dissipation.

[102] Referring to FIG. 8, the UV light-emitting unit according to the fifth exemplary embodiment of the present invention has the same configuration as the above-described UV light-emitting unit 200 (FIG. 3) according to the second exemplary embodiment of the present invention, except for a protection cover 610 and a weight compensation member 620, so the same components are given the same reference numerals, omitting repeated descriptions thereof.

[103] The protection cover 610 is made of a metal material having excellent heat conductivity, and the weight compensation member 620 is made of cast iron and is configured to compensate for vibration of the washing machine.

[104] The UV light-emitting unit according to the fifth exemplary embodiment of the present invention is advantageous in that heat dissipation is maximized by the structure of conducting heat to the weight compensation member 620.

[105] As described above, the washing machines according to the third to fifth exemplary embodiments of the present invention, which are illustrated in FIGS. 6 to 8, have UV light-emitting units having excellent heat dissipation, besides sterilization and deodorization, thereby preventing heat from shortening the life of UV LED elements.

[106] FIG. 9 is a sectional view illustrating a washing machine according to a sixth exemplary embodiment of the present invention.

[107] As illustrated in FIG. 9, the washing machine according to the sixth exemplary em-

bodiment of the present invention has the same configuration as the washing machine (FIG. 1) according to the first exemplary embodiment of the present invention, except for second and third UV light-emitting units 703 and 705, so the same components are given the same reference numerals, omitting repeated descriptions thereof.

[108] The washing machine according to the sixth exemplary embodiment of the present invention has a first UV light-emitting unit 701 on the rear surface of the tub 120, a second UV light-emitting unit 703 on the upper surface of the tub 120, and a third UV light-emitting unit 705 on the front surface of the tub 120. The positions of the first to third UV light-emitting units 701, 703, and 705 are not limited specifically, but they are preferably positioned higher than the rotational shaft 165 and protected from moisture.

[109] The washing machine according to the sixth exemplary embodiment of the present invention is advantageous in that it has first to third UV light-emitting units 701, 703, and 705 configured to sterilize and deodorize the front, upper, and rear surfaces of the tub 120 and can remove mold, microorganisms, and precipitates effectively, thereby improving the performance and reliability of the washing machine and lengthening the life.

[110] FIG. 10 is a sectional view illustrating a washing machine according to a seventh exemplary embodiment of the present invention, FIG. 11 is a sectional view illustrating a lifter and a UV light-emitting unit of FIG. 10, and FIG. 12 is a sectional view illustrating a drum of FIG. 10 and the interior of the drum.

[111] As illustrated in FIGS. 10 and 11, the washing machine according to the seventh exemplary embodiment of the present invention includes a cabinet 110, which defines the exterior, a tub 120 positioned inside the cabinet 110 and configured to contain washing water, and a drum 130 positioned inside the tub 120 and configured to rotate.

[112] The cabinet 110 has an introduction opening 112a on a front surface so that laundry can be moved in and out. The introduction opening 112a has a door 115, which is used to open/close the introduction opening 112a.

[113] The cabinet 110 may further include an input unit (not illustrated) on a front surface so that the user can manipulate it. That is, the input unit may be installed on the periphery of the door 115. The user can manipulate the input unit and select from various courses of the washing machine. The input unit may further include a display unit.

[114] The tub 120, which is provided inside the cabinet 110, may include at least one spring 121 on an upper portion. The spring 121 may be provided between the upper portion of the tub 120 and the inner surface of the cabinet 110. A damper 122 may be provided on the lower portion of the tub 120. The spring 121 and the damper 122 are configured to support the tub 120 and reduce vibration, which is transmitted to the tub

120 during high-speed rotation of the drum 130.

[115] The drum 130 can rotate about a penetration shaft extending through the center of the introduction opening 112a inside the tub 120. The drum 130, by means of its rotation function, can perform washing, rinsing, and dewatering.

[116] The cabinet 110 also includes, inside it, a water supply hose 140 configured to supply water into the tub 120 from an external water source, a water supply valve 141 configured to control the amount of water supplied through the water supply hose 140, and a detergent supply device 142 configured to introduce detergent so that the water, which is supplied through the water supply hose 140, can be introduced into the tub 120 together with detergent.

[117] The cabinet 110 also includes, inside it, a water discharge hose 150 and a water discharger pump 151, which are configured to discharge washing water to the outside during washing, rinsing, and dewatering.

[118] The cabinet 110 has, on a rear end, a driving unit 160 configured to rotate the drum 130, and the driving unit 160 may be a motor, for example. The driving unit 160 rotates the drum 130 through a rotational shaft 165, which is coupled to the drum 130.

[119] The washing machine can use heated water, during washing and rinsing, according to the user's selection or the option of a preset course. The heated water can be provided by a heater 125 positioned inside the cabinet 110.

[120] The drum 130 has a number of through-holes 132 formed on an inner surface. The through-holes 132 provide space through which washing water can flow into and out of the drum 130 during washing, rinsing, and dewatering.

[121] The drum 130 has, on an inner surface, a plurality of lifters 131 protruding in the inward direction at a predetermined interval. The lifters 131 are configured to lift laundry up to a predetermined position.

[122] The washing machine according to the present invention includes UV LED arrays 800 installed on the plurality of lifters 131. The UV LED arrays 800 may be installed to correspond to the plurality of lifters 131 one by one.

[123] The UV LED arrays 800 may be provided on protruding ends of the lifters 131 and installed in the longitudinal direction of the lifters 131. That is, the UV LED arrays 800 may be of a bar type.

[124] Each UV LED array 800 includes a substrate 801, which includes a conductive pattern, and a plurality of UV LEDs 802 installed on the substrate 801 at a predetermined interval.

[125] Each UV LED array 800 has first and second wirings 803 and 805 positioned on both end surfaces of the lifter 131 and configured to make contact with the substrate 801. Upper ends of the first and second wirings 803 and 805 may make contact with both ends of the lower surface of the substrate 801 to be electrically connected with each

other. The first and second wirings 803 and 805 are supplied with driving signals for driving the plurality of UV LEDs 802.

[126] First and second guide barriers 811a and 811b are provided on the outer surfaces of the first and second wirings 803 and 805.

[127] The first and second barriers 811a and 811b are configured to protect the plurality of UV LEDs 802, the substrate 801, and the first and second wirings 803 and 805 and electrically insulate them from washing water.

[128] A protection cover 820 is provided between the first and second guide barriers 811a and 811b. The protection cover 820 is made of a transparent material and is positioned on light-emitting surfaces of the UV LEDs 802. The protection cover 820 is configured to protect the UV LEDs 802, the substrate 801, and the first and second wirings 803 and 805 and electrically insulate them from washing water.

[129] The protection cover 820 includes a diffusion agent, and may further include a diffusion pattern and have a diffusion function.

[130] The protection cover 820 is of a bar type in conformation with the substrate 801, and both ends of the protection cover 820 are inserted into first and second receiving recesses 813a and 813b formed on inner surfaces of the first and second guide barriers 811a and 811b, respectively. That is, the protection cover 820 may be coupled to the first and second guide barriers 811a and 811b by inserting both ends into the first and second receiving recesses 813a and 813b.

[131] The protection cover 820 may further include a separate sealing member (not illustrated) made of rubber or silicon and configured to prevent inflow of washing water during coupling with the first and second guide barriers 811a and 811b.

[132] As described above, the UV LED arrays 800 are configured to sterilize and deodorize laundry and are advantageous in that, by performing sterilization and deodorization during the washing, rinsing, dewatering, and drying processes or independently, they can prevent contamination of laundry by mold, microorganisms, and participates resulting from insoluble metal soap.

[133] Referring to FIG. 12, a washing machine according to an embodiment of the present invention has first to third UV LED arrays 800a to 800c installed on lifters, which are provided inside the drum 130, so as to correspond one by one.

[134] The first to third UV LED arrays 800a to 800c are driven separately.

[135] The washing machine according to the present invention can separately control the first to third UV LED arrays 800a to 800c, according to existence/non-existence, position, and weight of laundry 850, thereby sterilizing and deodorizing the laundry 850 effectively while minimizing damage to the laundry 850.

[136] For example, in connection with the washing machine according to the present invention, the distance between the third UV LED array 800c and the laundry 850 is

smaller than the distance between the first and second UV LED arrays 800a and 800b and the laundry 850. Therefore, the third UV LED array 800c is controlled to have UV light intensity lower than that of the first and second UV LED arrays 800a and 800b. That is, the washing machine according to the present invention detects the distance between the first to third UV LED arrays 800a to 800c and the laundry 850 and adjusts the UV light intensity according to the detected distance, thereby minimizing damage to the laundry 850.

[137] FIG. 13 is a diagram illustrating a schematic configuration of a UV light-emitting unit according to the present invention, and FIG. 14 is a diagram illustrating UV LED driving units and UV LED arrays of FIG. 13.

[138] As illustrated in FIGS. 13 and 14, the UV light-emitting unit according to the present invention includes a UV LED block 800, a UV LED driving unit 950 configured to drive the UV LED block 800, and a control unit 900 configured to control the UV LED driving unit 950.

[139] The UV light-emitting unit also includes an object detection unit 910 configured to detect laundry inside the washing machine, a position sensor unit 920 configured to detect the position of the laundry, and a weight sensor unit 930 configured to detect the weight of the laundry.

[140] The UV LED block 800 includes first to third UV LED arrays 800a to 800c, which are installed on first to third lifters inside the drum, respectively.

[141] Each of the first to third UV LED arrays 800a to 800c includes a plurality of UV LEDs and at least one W LED. The UV LEDs can be defined as ultraviolet light-emitting diodes emitting ultraviolet light, and the W LED can be defined as a white light-emitting diode emitting white light.

[142] The UV LEDs have a UV wavelength band equal to or less than 400 nm. For example, the UV LEDs emit UV light having a peak wavelength at 200 to 350 nm. The UV LEDs, more preferably, emit UV light having a maximum peak wavelength at 265 to 340 nm.

[143] The UV LEDs may have an interval of 0.5 cm or less between adjacent UV LEDs.

[144] The UV LED driving unit 950 includes first to third UV LED driving units 951 to 955, which are driven separately in response to first to third control signals CS1 to CS3 from the control unit 900.

[145] The object detection unit 910 is configured to detect whether laundry exists in the drum. The object detection unit 910 may be installed inside the drum and, preferably, may be installed inside the UV light-emitting unit.

[146] The control unit 900 is configured to determine whether laundry exists, in response to a first sensing signal from the object detection unit 910, and control turning on/off of the W LED.

[147] That is, when laundry is loaded into the drum, the object detection unit 910 detects the laundry, and the control unit 900 controls the UV LED driving unit 950 so that the W LED is driven according to the sensing signal from the object detection unit 910.

[148] The position sensor unit 920 is configured to detect the position of laundry loaded into the drum. The position sensor unit 920 may be included in the first to third UV LED arrays 800a to 800c, or may be provided in an area adjacent to the first to third UV LED arrays 800a to 800c. That is, the position sensor unit 920 senses the position of laundry based on each of the first to third UV LED arrays 800a to 800c.

[149] The weight sensor unit 930 is configured to sense the weight of laundry.

[150] A method of driving the UV light-emitting unit according to the present invention will now be described: the UV light-emitting unit supplies the control unit 900 with a first sensing signal, which is generated by the object detection unit 910 after detecting existence/non-existence of laundry inside the drum, and the control unit 900 controls the UV LED driving unit 950 so that the W LEDs of the UV LED arrays 800 are turned on or off. Specifically, the control unit 900 turns on the W LEDs when laundry is loaded into the drum.

[151] Thereafter, the UV light-emitting unit supplies the control unit 900 with second and third sensing signals, which are generated by the position sensor unit 920 and the weight sensor unit 930 after detecting information regarding laundry loaded into the drum, and the control unit 900 controls the UV LED driving unit 950 so that the UV LEDs of the UV LED arrays 800a to 800c are turned on or off. The control unit 900 separately controls the first to third UV LED driving units 951 to 955 of the UV LED driving unit 950 according to laundry information. Therefore, the first to third UV LED arrays 800a to 800c may be driven separately by the first to third UV LED driving units 951 to 955.

[152] As described above, the washing machine according to the present invention is advantageous in that it determines if laundry exists inside the drum, detects information regarding the position, weight, and the like of the laundry, and separately controls the first to third UV LED arrays 800a to 800c, which are configured to sterilize and deodorize laundry, thereby sterilizing and deodorizing the laundry effectively while minimizing damage to the laundry.

[153]

Claims

[Claim 1] A washing machine using an ultraviolet light-emitting diode, the washing machine comprising:
a drum;
a rotational shaft coupled to a rear surface of the drum;
a tub compassing the drum; and
a UV light-emitting unit disposed on a rear surface of the tub in a bar type and configured to sterilize and deodorize the rear surface of the drum and a periphery of the rotational shaft.

[Claim 2] The washing machine of claim 1, wherein the UV light-emitting unit comprises:
a blocking member configured to interrupt outflow of washing water;
a UV LED unit emitting UV light; and
a frame containing the blocking member and the UV LED unit and coupled to the tub.

[Claim 3] The washing machine of claim 2, wherein a first through-hole is formed on the frame in an area corresponding to a UV LED element of the LED unit.

[Claim 4] The washing machine of claim 3, wherein a second through-hole is formed on the rear surface of the tub in an area corresponding to the first through-hole.

[Claim 5] The washing machine of claim 4, further comprising:
a receiving recess compassing a periphery of the first through-hole; and
a locking recess supporting the blocking member .

[Claim 6] The washing machine of claim 5, wherein the blocking member comprises:
a packing contained in the receiving recess; and
a protection cover inserted into the locking recess.

[Claim 7] The washing machine of claim 6, wherein the protection cover is one of transparent quartz and Pyrex.

[Claim 8] The washing machine of claim 4, wherein the second through-hole comprises an inclined surface.

[Claim 9] The washing machine of claim 2, wherein the LED unit comprises a waterproofing device, and the blocking member comprises a V-packing.

[Claim 10] The washing machine of claim 1, wherein the UV light-emitting unit comprises a heat sink on a lower surface.

[Claim 11] The washing machine of claim 10, further comprising a cooling water unit dissipated heat from the heat sink.

[Claim 12] The washing machine of claim 1, further comprising a protection cover and a weight compensation member disposed on a lower surface of the UV light-emitting unit.

[Claim 13] The washing machine of claim 1, further comprising:
a second UV light-emitting unit disposed on an upper surface of the tub; and
a third UV light-emitting unit disposed on a front surface of the tub.

[Claim 14] A washing machine using a UV LED, comprising:
a drum;
a plurality of lifters protruding inside the drum; and
a UV light-emitting unit comprises a plurality of UV LED arrays installed on ends of the plurality of lifters, respectively.

[Claim 15] The washing machine of claim 14, wherein the UV light-emitting unit comprises:
a plurality of UV LED driving units connected to the plurality of UV LED arrays one by one and configured to separately drive the plurality of UV LED arrays;
a control unit controlling the plurality of UV LED driving units;
an object detection unit detecting whether laundry exists in the drum;
a position sensor unit detecting the position of the laundry; and
a weight sensor unit detecting the weight of the laundry.

[Claim 16] The washing machine of claim 15, wherein each of the plurality of UV LED arrays comprises a plurality of UV LEDs and at least one white LED.

[Claim 17] The washing machine of claim 16, wherein the UV LEDs comprises an interval of 0.5 cm or less between adjacent UV LEDs.

[Claim 18] The washing machine of claim 16, wherein the UV LEDs comprises a maximum peak wavelength band at 200 to 350 nm.

[Claim 19] The washing machine of claim 16, wherein the UV LEDs comprises a maximum peak wavelength band at 265 to 340 nm.

[Claim 20] The washing machine of claim 14, wherein each of the plurality of UV LED arrays comprises:
a substrate;
a plurality of UV LEDs disposed on the substrate;
first and second wirings disposed on both end surfaces of the lifter;
first and second guide barriers compassing both side peripheries of the

substrate and outer surfaces of the first and second wirings; and
a protection cover disposed between the first and second guide barriers.

[Claim 21] The washing machine of claim 20, wherein first and second receiving recesses are disposed on inner surfaces of the first and second guide barriers, the protection cover being inserted into the first and second receiving recesses.

[Claim 22] The washing machine of claim 20, wherein the protection cover comprises a diffusion agent or a diffusion pattern.

[Claim 23] A washing machine using a UV LED, comprising:
a plurality of lifters disposed inside a drum;
a plurality of UV LED arrays installed on ends of the plurality of lifters, respectively, and configured to sterilize and deodorize laundry loaded into the drum; and
a plurality of UV LED driving units connected to the plurality of UV LED arrays one by one and configured to separately drive the plurality of UV LED arrays.

[Claim 24] The washing machine of claim 23, further comprising a control unit c controlling the plurality of UV LED driving units.

[Claim 25] The washing machine of claim 23, further comprising an object detection unit detecting whether laundry exists in the drum.

[Claim 26] The washing machine of claim 23, further comprising a position sensor unit detecting the position of the laundry.

[Claim 27] The washing machine of claim 23, further comprising a weight sensor unit detecting the weight of the laundry.

[Claim 28] The washing machine of claim 23, wherein each of the plurality of UV LED arrays comprises:
a substrate;
a plurality of UV LEDs disposed on the substrate;
first and second wirings disposed on both end surfaces of the lifter;
first and second guide barriers compassing both side peripheries of the substrate and outer surfaces of the first and second wirings; and
a protection cover disposed between the first and second guide barriers.

[Claim 29] The washing machine of claim 23, wherein first and second receiving recesses are disposed on inner surfaces of the first and second guide barriers, the protection cover being inserted into the first and second receiving recesses.

[Claim 30] The washing machine of claim 28, wherein the protection cover comprises a diffusion agent or a diffusion pattern.

[Fig. 1]

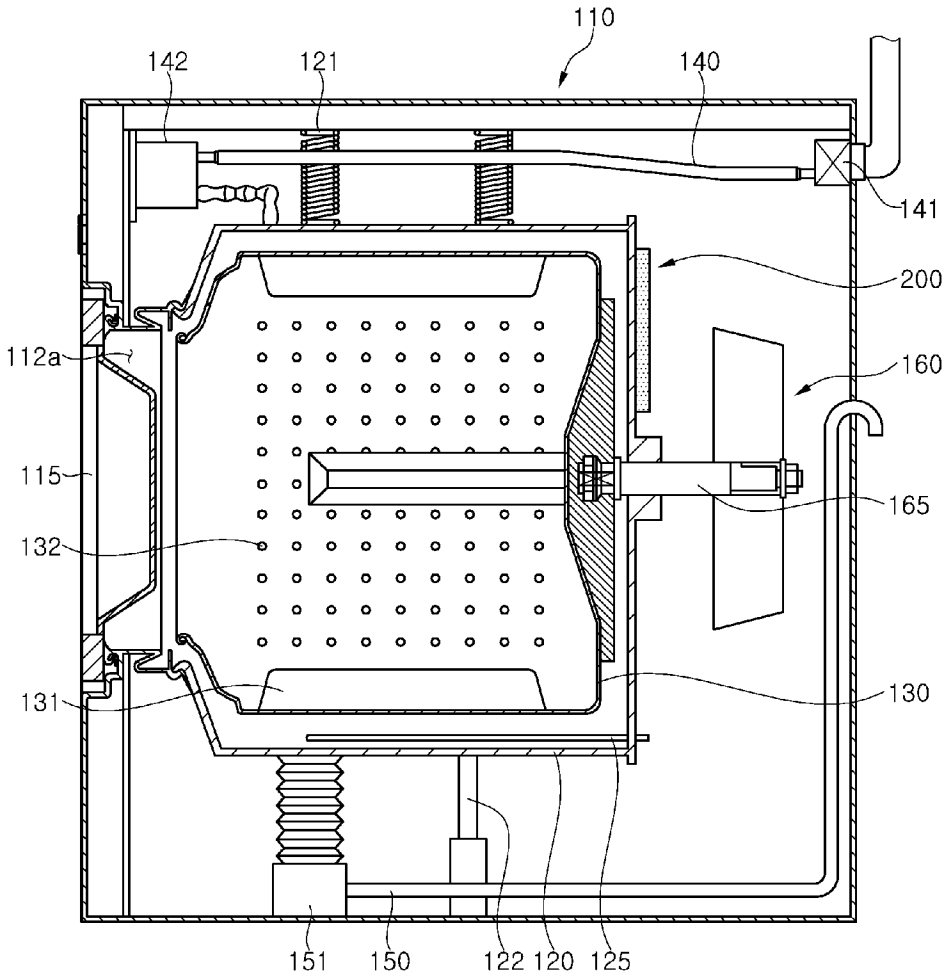
110
142
121
140
141
200
112a
160
115
165
132
131
130
151
150
122
120
125

[Fig. 2]

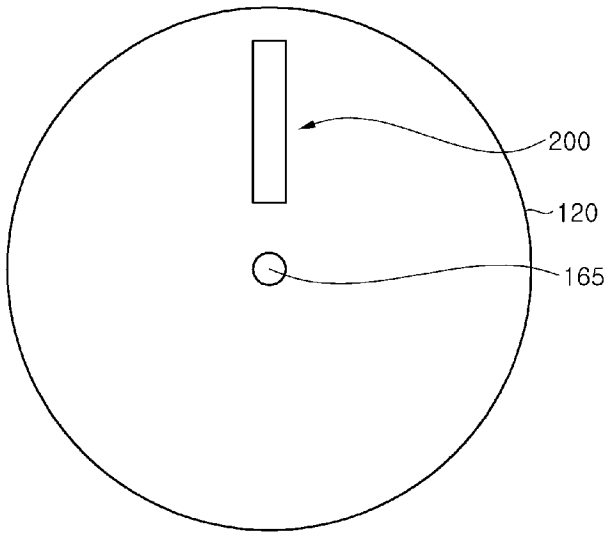
200
120
165

[Fig. 3]

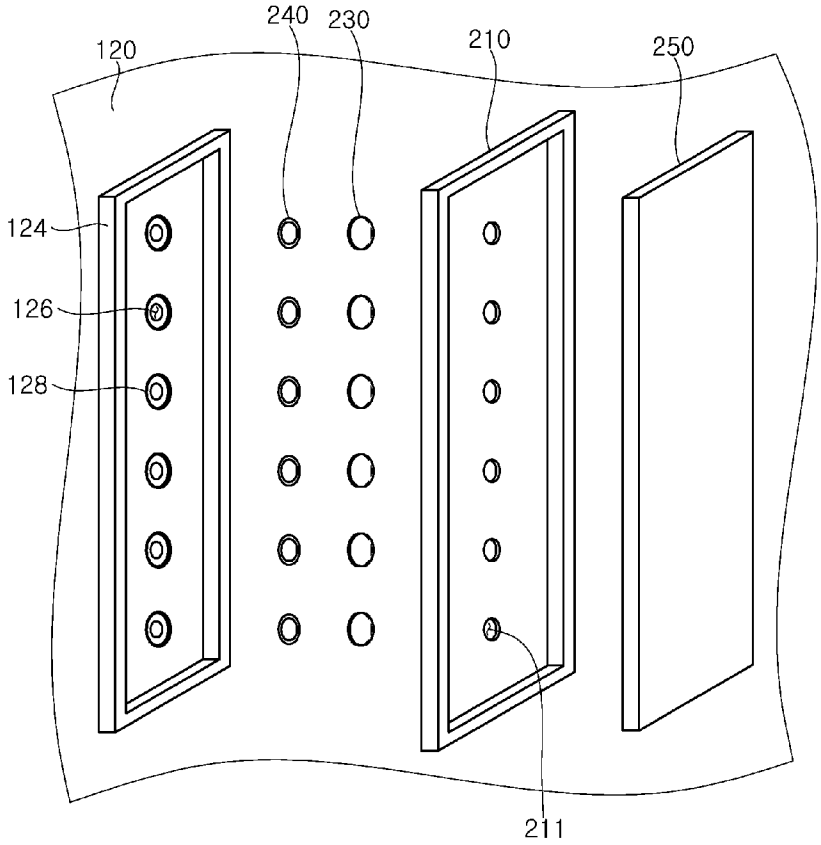

[Fig. 4]

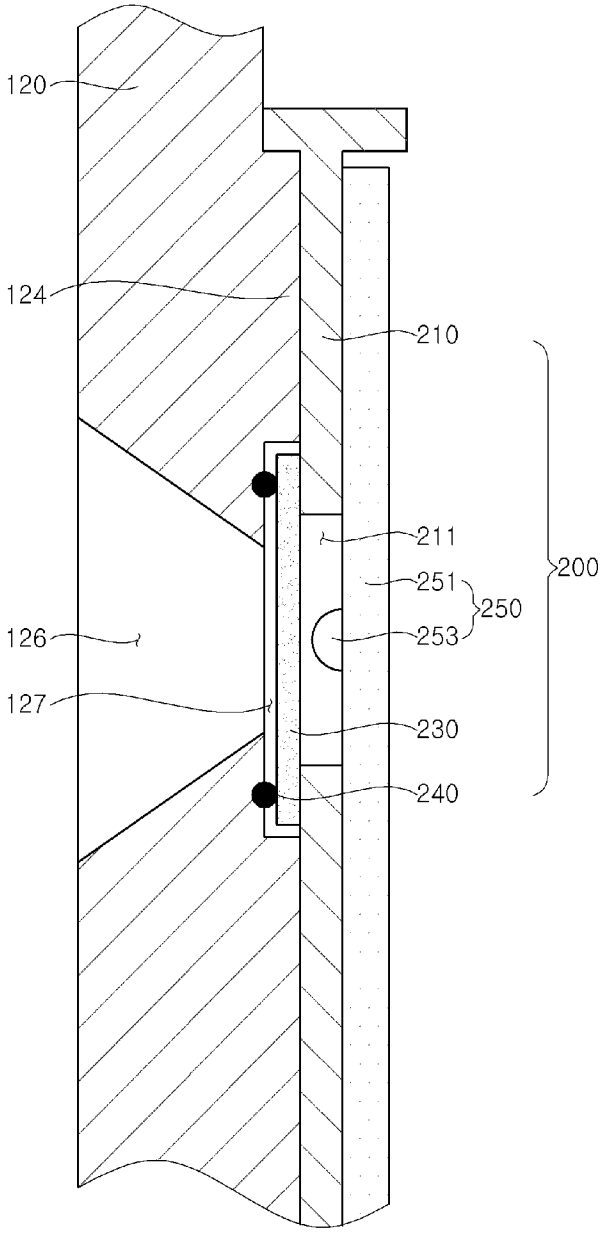

[Fig. 5]

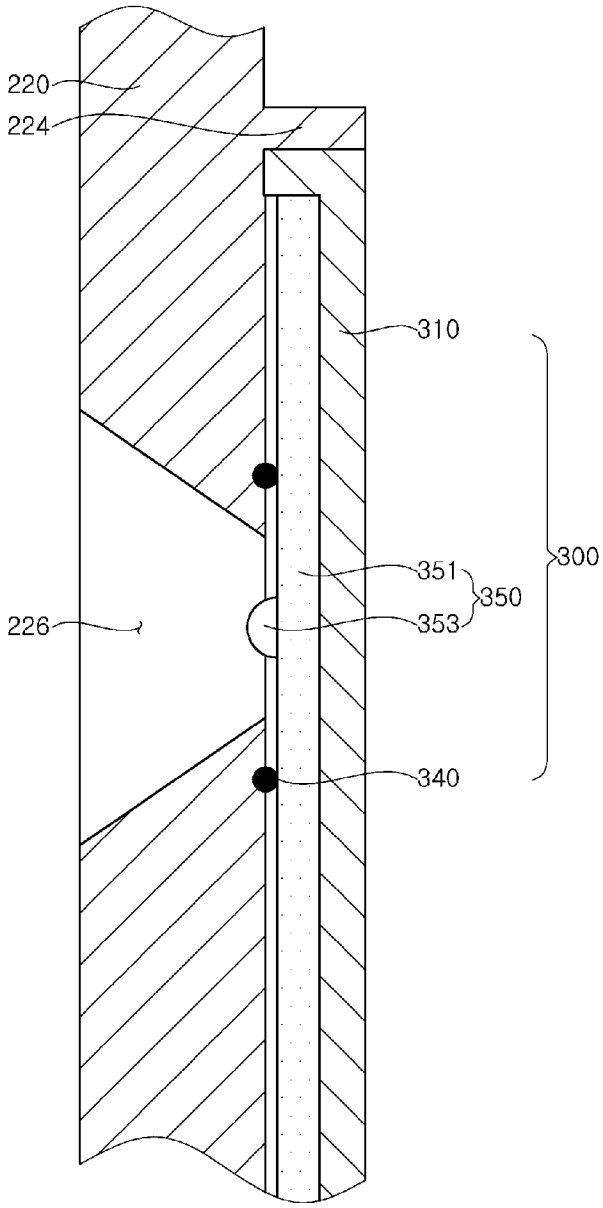

[Fig. 6]

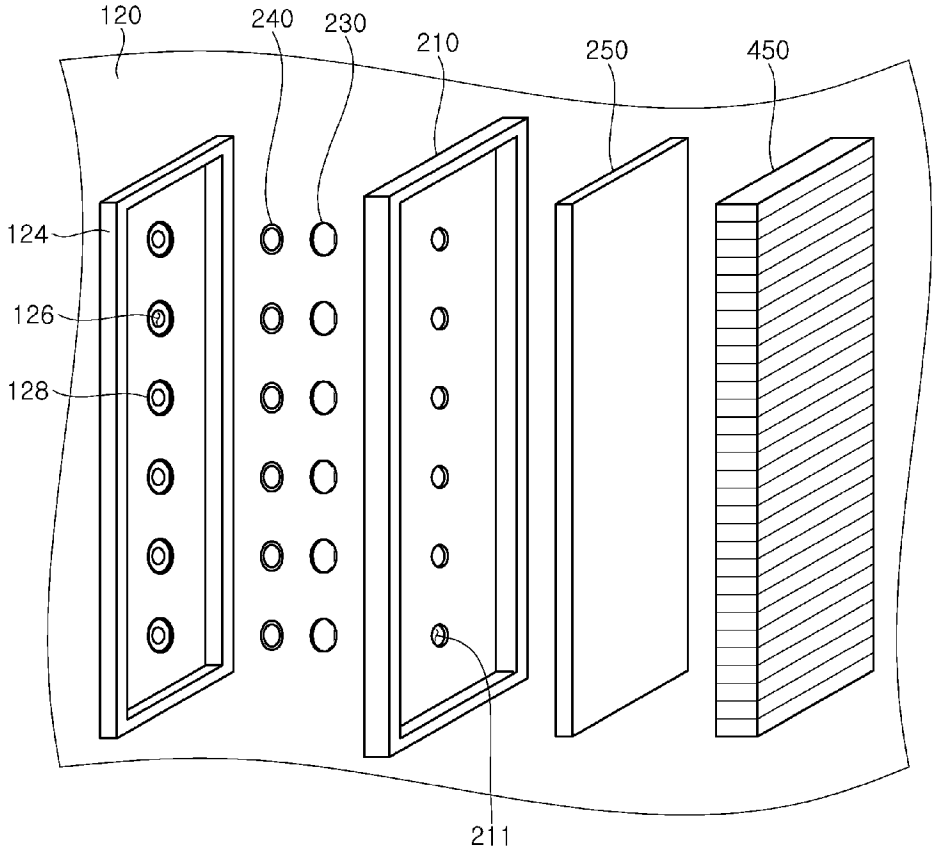

[Fig. 7]

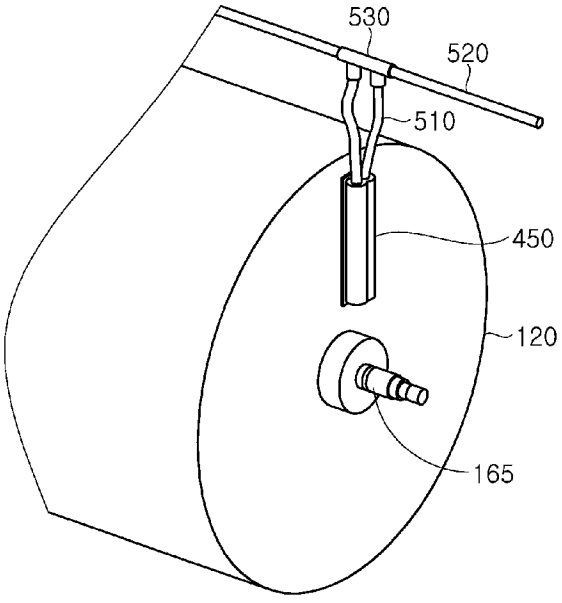

[Fig. 8]

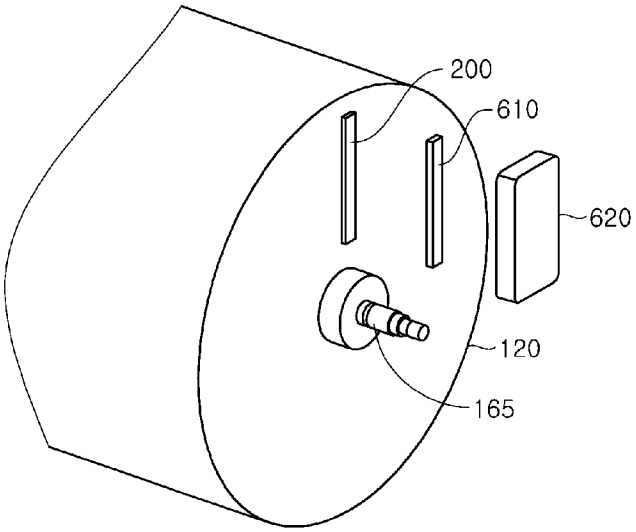
200
610
620
120
165

[Fig. 9]

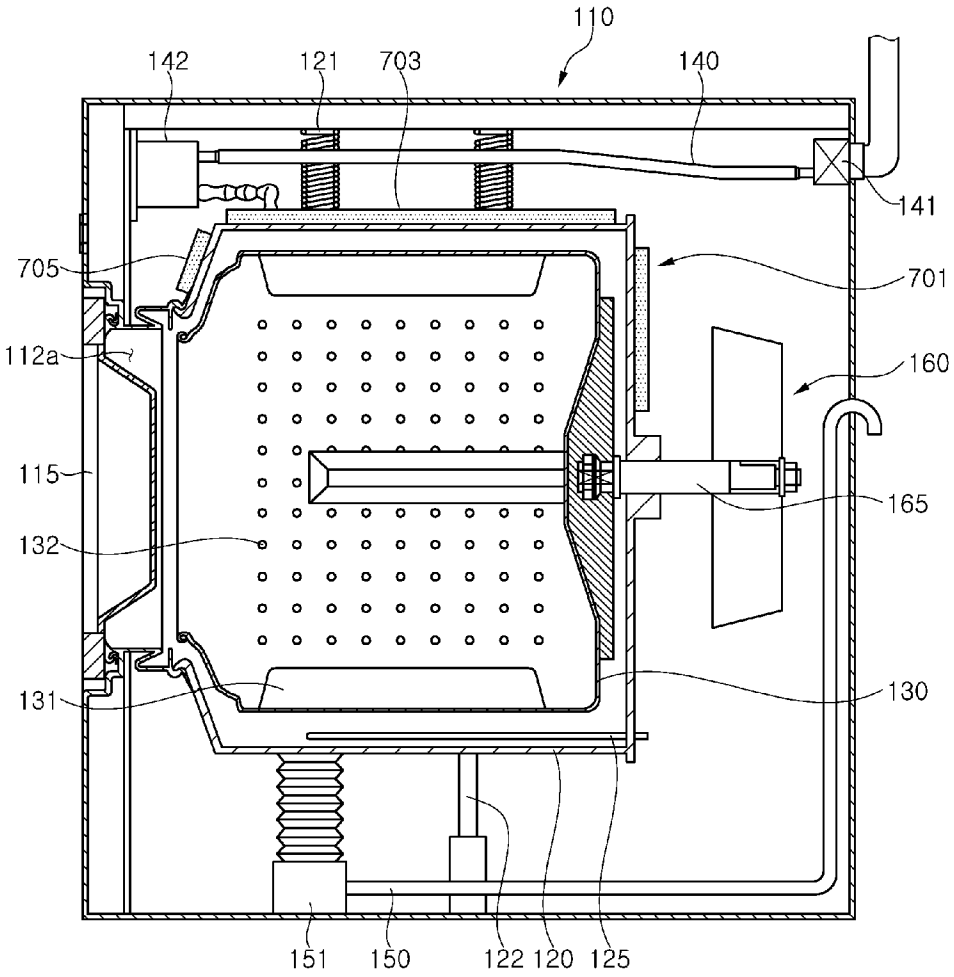
110
142
121
703
140
141
705
701
112a
160
115
165
132
131
130
151
150
122
120
125

[Fig. 10]

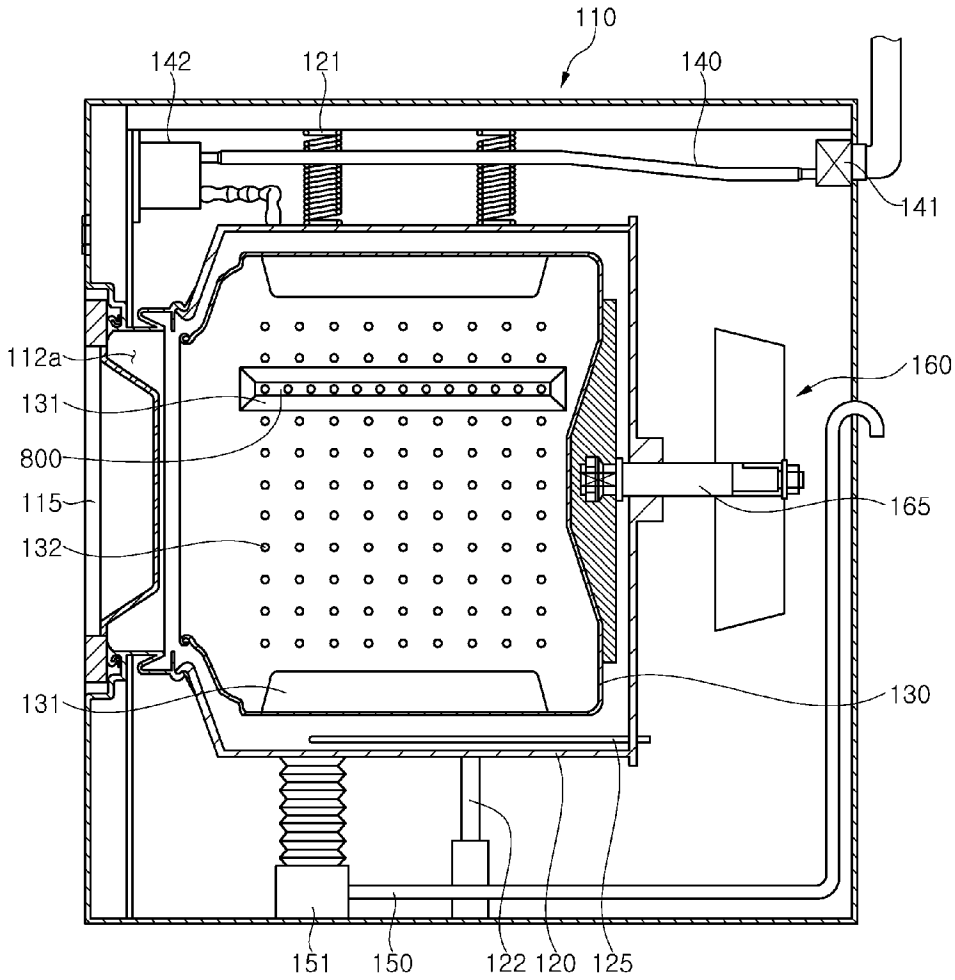
110
142
121
140
141
112a
131
800
115
132
160
165
131
130
151
150
122
120
125

[Fig. 11]

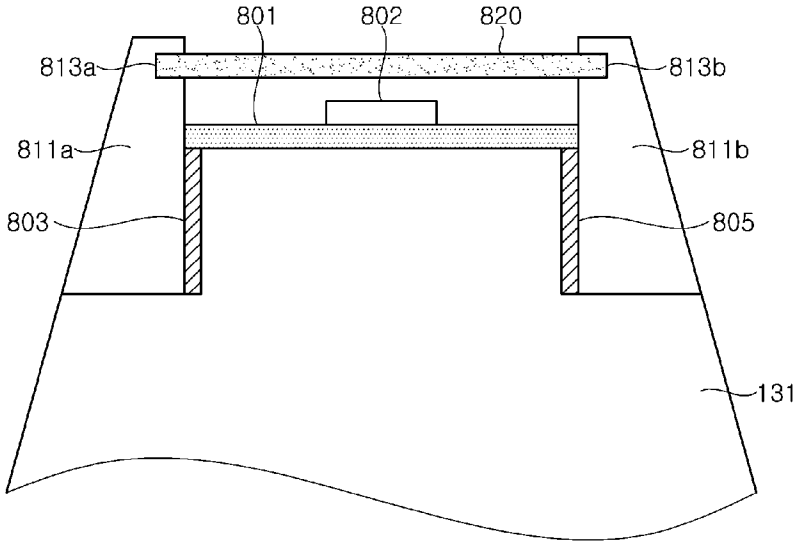
801
802
820
813a
813b
811a
811b
803
805
131

[Fig. 12]

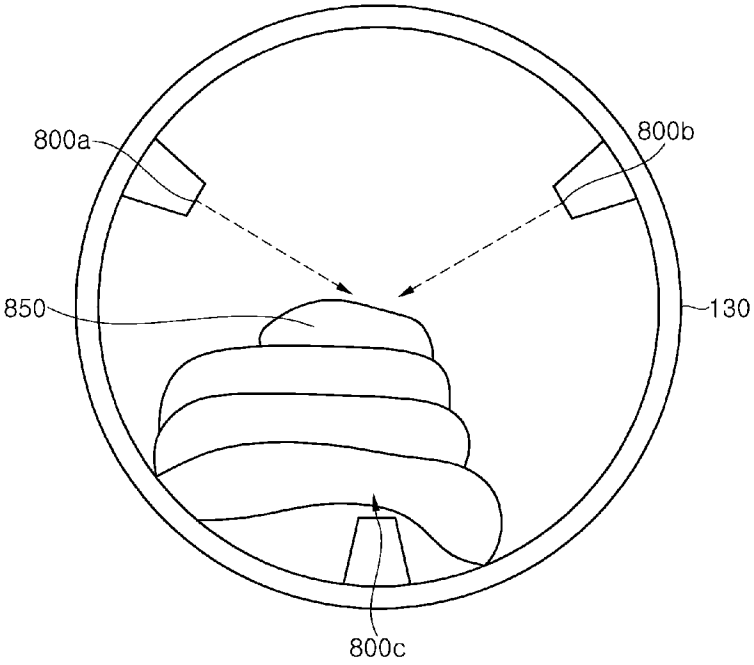

[Fig. 13]

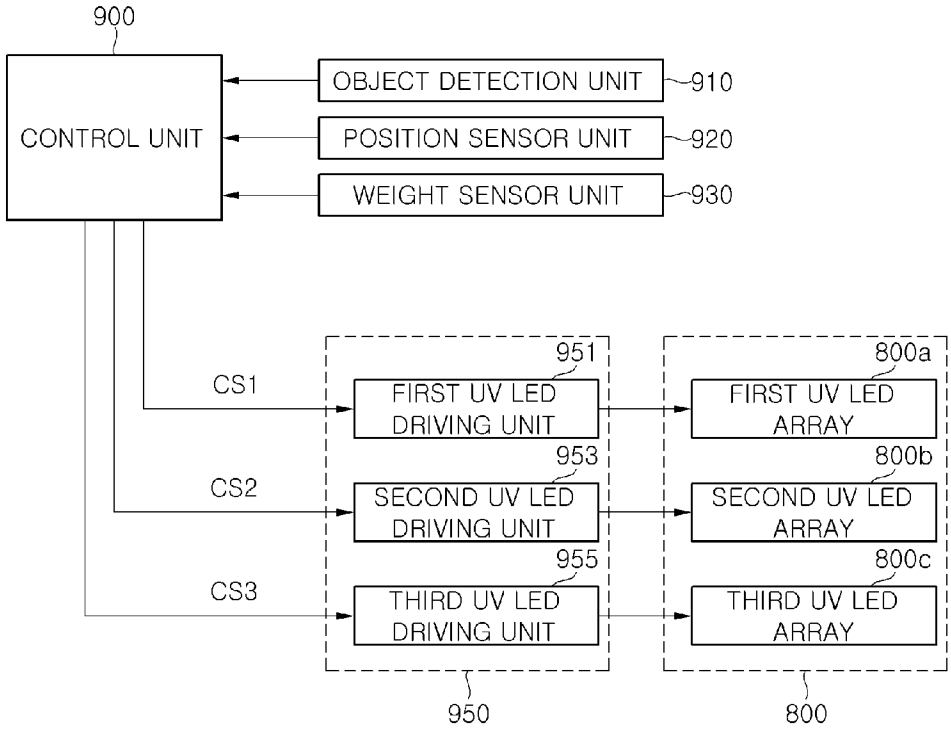

[Fig. 14]

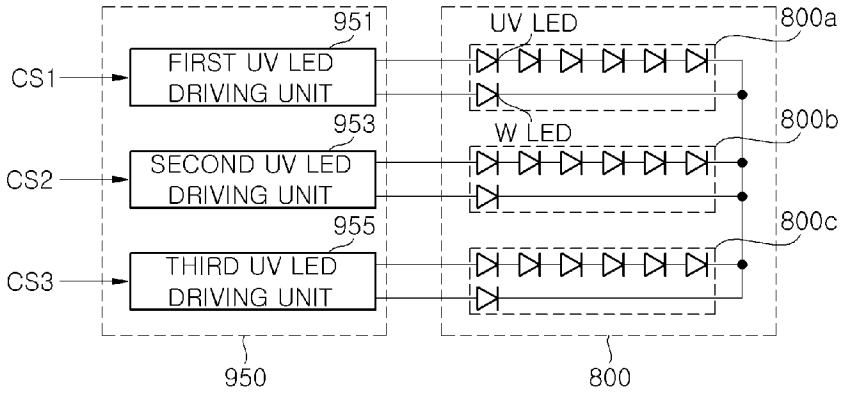

INTERNATIONAL SEARCH REPORT

International application No.
PCT/KR2013/012277

A. CLASSIFICATION OF SUBJECT MATTER

D06F 39/00(2006.01)i, A61L 2/10(2006.01)i

According to International Patent Classification (IPC) or to both national classification and IPC

B. FIELDS SEARCHED

Minimum documentation searched (classification system followed by classification symbols)
D06F 39/00; D06F 37/04; A61L 2/10; D06F 37/10

Documentation searched other than minimum documentation to the extent that such documents are included in the fields searched
Korean utility models and applications for utility models
Japanese utility models and applications for utility models

Electronic data base consulted during the international search (name of data base and, where practicable, search terms used)
eKOMPASS(KIPO internal) & Keywords: wash, UV, LED, sterilize, deodorize, and lifter

C. DOCUMENTS CONSIDERED TO BE RELEVANT

Category*	Citation of document, with indication, where appropriate, of the relevant passages	Relevant to claim No.
X	KR 10-2012-0045785 A (LG INNOTECH CO., LTD.) 09 May 2012 See abstract, paragraphs [0025], [0038], and figure 1.	1,13
Y		2-3
A		4-12,14-30
Y	KR 10-1099326 B1 (KIM et al.) 26 December 2011 See abstract, paragraphs [0045], [0059], [0064], and figures 1, 3-6.	2-3
X	KR 10-2012-0034898 A (LG INNOTECH CO., LTD.) 13 April 2012 See abstract, paragraphs [0008], [0033], and figures 1, 3-4.	14
A	KR 10-2012-0031332 A (LG INNOTECH CO., LTD.) 03 April 2012 See abstract, claim 1, and figures 1-2.	1-30
A	US 2009-0064422 A1 (KIM et al.) 12 March 2009 See abstract, paragraph [0025], claim 1, and figures 1-2.	1-30

☐ Further documents are listed in the continuation of Box C. ☒ See patent family annex.

* Special categories of cited documents:
"A" document defining the general state of the art which is not considered to be of particular relevance
"E" earlier application or patent but published on or after the international filing date
"L" document which may throw doubts on priority claim(s) or which is cited to establish the publication date of another citation or other special reason (as specified)
"O" document referring to an oral disclosure, use, exhibition or other means
"P" document published prior to the international filing date but later than the priority date claimed
"T" later document published after the international filing date or priority date and not in conflict with the application but cited to understand the principle or theory underlying the invention
"X" document of particular relevance; the claimed invention cannot be considered novel or cannot be considered to involve an inventive step when the document is taken alone
"Y" document of particular relevance; the claimed invention cannot be considered to involve an inventive step when the document is combined with one or more other such documents,such combination being obvious to a person skilled in the art
"&" document member of the same patent family

Date of the actual completion of the international search	Date of mailing of the international search report
06 March 2014 (06.03.2014)	**26 March 2014 (26.03.2014)**

Name and mailing address of the ISA/KR
International Application Division
Korean Intellectual Property Office
189 Cheongsa-ro, Seo-gu, Daejeon Metropolitan City, 302-701, Republic of Korea
Facsimile No. +82-42-472-7140

Authorized officer
CHOI, Hyun Goo
Telephone No. +82-42-481-8288

INTERNATIONAL SEARCH REPORT

Information on patent family members

International application No.
PCT/KR2013/012277

Patent document cited in search report	Publication date	Patent family member(s)	Publication date
KR 10-2012-0045785 A	09/05/2012	None	
KR 10-1099326 B1	26/12/2011	None	
KR 10-2012-0034898 A	13/04/2012	None	
KR 10-2012-0031332 A	03/04/2012	None	
US 2009-0064422 A1	12/03/2009	CN 101313100 A	26/11/2008
		CN 101313100 B	01/06/2011
		CN 101929054 A	29/12/2010
		CN 101929054 B	21/03/2012
		EP 1960583 A1	27/08/2008
		EP 1960583 A4	17/03/2010
		EP 1960583 B1	23/05/2012
		EP 2236660 A1	06/10/2010
		KR 10-2007-0053045 A	23/05/2007
		KR 10-2007-0053046 A	23/05/2007
		US 2011-0252578 A1	20/10/2011
		US 8303718 B2	06/11/2012
		WO 2007-058478 A1	24/05/2007