Aug. 30, 1932. M. W. McARDLE 1,875,078

ELECTRIC CIRCUIT INSTALLATION

Filed July 19, 1930 2 Sheets-Sheet 1

Fig. 1.

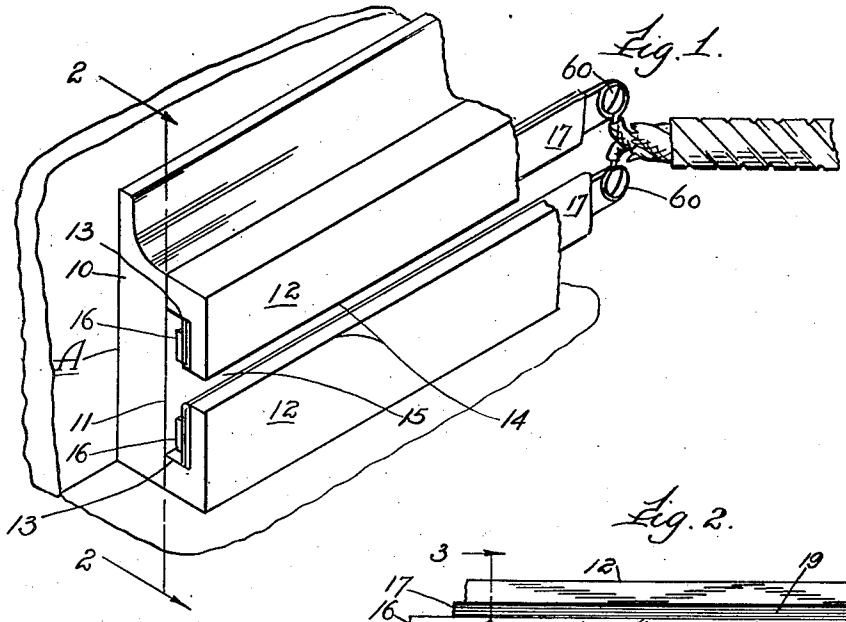

Fig. 2.

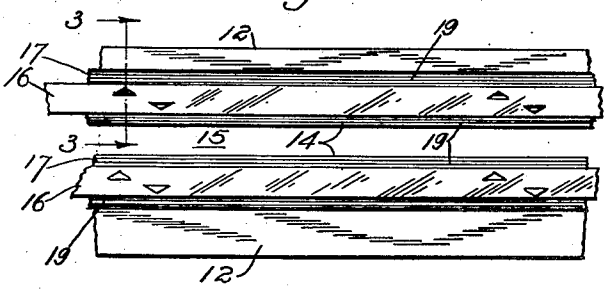

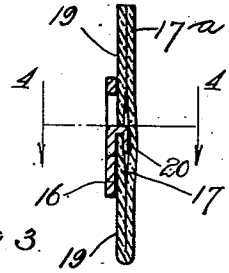

Fig 3.

Fig. 4.

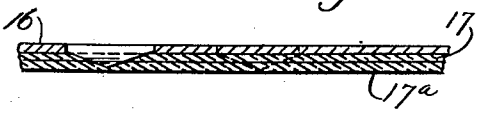

Fig. 5.

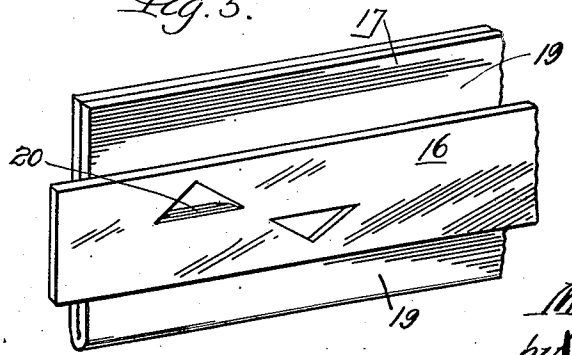

Witness
H. C. McKnight

Inventor
Michael W. McArdle.
by Burton & Burton
his Attorneys.

Aug. 30, 1932. M. W. McARDLE 1,875,078

ELECTRIC CIRCUIT INSTALLATION

Filed July 19, 1930 2 Sheets-Sheet 2

Fig. 7.

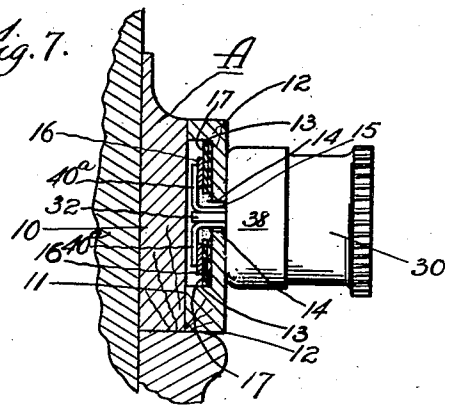

Fig. 9.

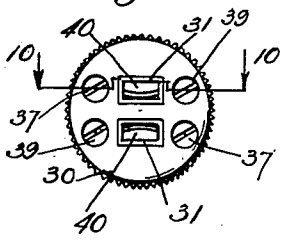

Fig. 6.

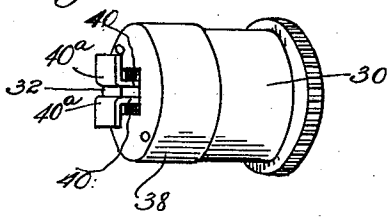

Fig. 8.

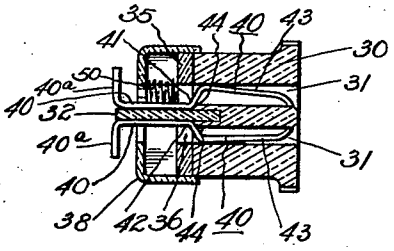

Fig. 10.

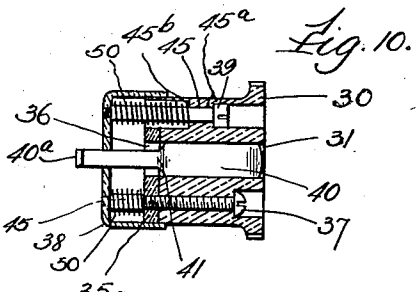

Fig. 12.

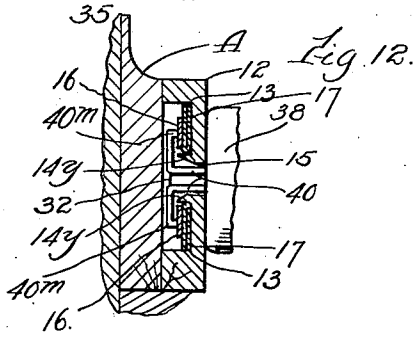

Fig. 11.

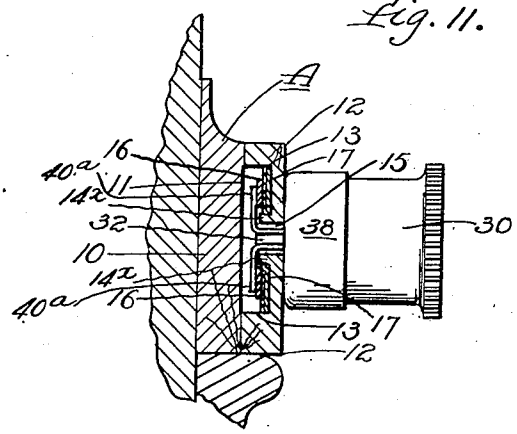

Witness
M. C. McKnight.

Inventor
Michael W. McArdle.
by Burton & Burton
his Attorneys.

Patented Aug. 30, 1932

1,875,078

UNITED STATES PATENT OFFICE

MICHAEL W. McARDLE, OF CHICAGO, ILLINOIS

ELECTRIC CIRCUIT INSTALLATION

Application filed July 19, 1930. Serial No. 469,108.

The purpose of this invention is to provide a construction adapted to be used for electric circuit connection in a building or apartment for affording facility for circuit outlets at any number of positions and adapted to be shifted to any point in the length of the device. It consists in the elements and features of construction shown and described as indicated in the claims.

In the drawings:

Figure 1 is a perspective view of a casing constituting one element of the invention, said casing being adapted to be mounted upon the wall of the building or apartment served for receiving the contact carrier which constitutes the remainder of the invention.

Figure 2 is a section at the line 2—2 on Figure 1.

Figure 3 is a transverse section on an enlarged scale of one of the conductive strips constituting the circuit member in the casing with its insulating support.

Figure 4 is a section at the line 4—4 on Figure 3.

Figure 5 is a perspective view of a short piece of the conductive strip constituting the circuit element carried by the casing as prepared for mounting in the casing, the same being shown attached to its insulating support.

Figure 6 is a perspective view of the contact carrier.

Figure 7 is a section transverse with respect to the casing showing the contact carrier in side elevation engaged in circuit-connecting position in the casing.

Figure 8 is an axial section of the contact carrier in the plane of the section of Figure 7.

Figure 9 is an outer end elevation of the same.

Figure 10 is a detail section at the line 10—10 on Figure 9.

Figure 11 is a view similar to Figure 7 showing a modification of the casing.

Figure 12 is a detail section similar to part of Figure 11 showing a slight further modification.

Referring to the drawings:

The casing, which may be referred to as a structural molding, identified in its entirety as a casing, A, and which, in the particular form shown, is adapted to be mounted upon the upper edge of the base board of an apartment, comprises a back or base member, 10, and two cooperating front members, 12, 12. The base member is a strip of normally non-conductive material, as wood, having a plane flat forward face, as seen at 11, and the cooperating members, 12, 12, each consists of a plane strip rabbeted at one side and edge, as indicated at 13, the two strips being mounted upon the plane face, 11, of the base member with their rabbets facing each other and inwardly, and their proximate longitudinal edges, 14, 14, spaced apart narrowly to form a slot, 15. On the inner rabbeted faces of the members, 12, and thereby at opposite sides of the slot, there are mounted conducting strips, 16, each of which is prepared for such mounting by being first mounted upon an insulating strip, 17, the manner of such mounting being hereinafter specifically described.

The depth of the rabbets is sufficient to leave a substantial interval between the conductive strip mounted upon the inner face of the rabbet and the opposite flat face, 11, of the base, 10.

The insulating strips, 17, are several times wider than the conductive strips, 16, which are mounted upon them, so that there is a substantial margin of the insulating strips at both sides of the conductive strip, as indicated at 19, 19. The conductive strip is secured to the insulating strip so as to be safely retained about midway in the width of the latter by lugs, 20, 20, struck from the conductive strip and protruded through the insulating strip and clinched down upon the latter on the opposite side thereof from the conductive strip, as seen in Figure 3.

For insulatingly covering the clinched lugs, a second insulating strip, 17^a, is applied over the lugs and secured to the insulating strips 17. Preferably, the two insulating strips are formed integrally, the integral strip being of double width and folded longitudinally to lap one-half of the width upon the other half through which the lugs are protruded and on which they are clinched, so that they are covered by the folded and lapped portion referred to as the second

strip, 17ª. The assembled constructions comprising each the conductive strip and the insulation upon which it is mounted, and by which the lugs are covered, are mounted and secured as described, upon the inner rabbeted faces of the casing members, 12, 12, with the fold of the insulation constituting the edge which is toward the slot.

The insulating strips are made of suitably thin sheet material of suitable texture to be readily punctured by the clinching lugs, 20, as illustrated in Figures 3, 4 and 5, and suitably tough and flexible to be folded, as illustrated in Figure 3 to form of an integral strip the insulation for carrying the conductive strip and the insulation for covering the clinching lugs.

The reason for preferably making the two insulation strips unitary, and folding the unitary strip as described for covering the lugs, is chiefly to avoid presenting at the slot two edges of strips between which the contact terminals of the contact carrier, hereinafter described, might be entered instead of entering behind the conducting strips for the purpose of contact therewith, as will be understood from the hereinafter contained description of the contact carrier and contact terminals thereof.

The contact carrier, identified in entirety as the carrier, B, comprises a body member, 30, of non-conductive material preferably cylindrical, as shown, and having two parallel longitudinally extending apertures, 31, 31, for receiving two electrically conductive strips, 40, 40, hereinafter called "contacts", and admitting alongside them respectively in the respective apertures the terminal contacts of circuit-connecting plugs of usual form and dimensions.

The contacts, 40, 40, are insulated from each other by the substance of the body member intervening between the longitudinal extent of the apertures, 31, 31, and at the parts of said contacts which extend from said apertures as hereinafter particularly described, by a thin narrow strip, 32, of insulating material which is secured rigidly in the body member between the apertures, 31, 31, and projects longitudinally of the body member between the projecting and protruding portions of the contacts, 40, 40, which are flexed as seen at 41 and 42 to offset their projecting portions, 43, 43, laterally toward each other, and form shoulders, 44, 44, which stop against the end of the body member between the apertures, 31, 31, at opposite sides of the projecting insulating strip, 32. The body member, 30, is furnished with a terminal disk, 35, of insulating material having an aperture, 36, to accommodate the projecting portions, 43, 43, of the contacts, 40, 40, and the intervening projecting insulating strip, 32. This terminal disk is made fast to the body member by two screws, 37, 37, as seen in Figures 7 and 10.

The contact carrier comprises in addition to the body member which may be understood as comprising the terminal disk, 35, a head, 38, which, as illustrated, is a disk of insulating material dimensionally mated with the terminal disk, 35, and attached to the body member by two bolts, 39, 39, which are set through suitable longitudinally extending holes, 45, 45, in the body member and its terminal disk, said holes being bored of diameter to admit the bolts, and counterbored from the outer end to admit the heads of the bolts to a stop shoulder, 45ª, formed by the counterbore, and counterbored from the other end to admit coil springs, 50, around the bolts to the stop shoulder, 45ᵇ, formed by the second counterbore.

The coil springs, 50, stopped, as described, at the inner ends on the stop shoulders, 45ᵇ, react at their outer ends on the head disk, 45, into which the bolts are screwed for attaching the head to the body, adapted to be normally spaced from the end of the body a distance determined by the position of the stop shoulder, 45ª, the springs operating by their reaction as described, for holding the head, 38, yieldingly spaced the predetermined distance from the end of the body.

The head, 38, is centrally apertured to permit the contacts and intervening strip to protrude through said head; and at the protruding part the contacts are flexed transversely in opposite directions away from each other, forming oppositely projecting terminals, 40ª, 40ª, which are aligned with each other and insulated from each other by the interposed insulating strip, 32, the resulting form of the contact element being hereinafter referred to as "T-form". The oppositely extending parts of the cross of the T-form being insulated from each other for contacting respectively the conductive strips, 16, 16, said conductive strips are also insulated from each other in the casing, as above described.

From the foregoing description it may be understood that for connecting the circuit which comprises the conductive strips mounted as described in the casing, A, the T-form contact element of the contact carrier, B, is intruded through the slot, 15, of the casing, A, thus bringing the head, 38, into contact with the forward casing members, 12, 12.

Then pressing the carrier against the casing to take up the yield of the spring, 36, the T-form terminal of the contact element is forced inwardly past the plane of the conductive strips, 16; and then the carrier being rotated 90 degrees, turning the contact terminals into position crosswise of said strips, respectively, and the pressure being released, the reaction of the spring, 50, stresses and holds the contacts on the conductive strips, maintaining the circuit connection, while the

carrier may be shifted along the slot to any desired position in the length of the casing.

It will be understood that the conductive strips are connected to an electric circuit containing a source of current, as indicated conventionally at 60, 60.

In Figure 11, the front casing members are shown in a form somewhat preferred. In this form these casing members are shown with the edge of the rabbet toward the slot furnished with an inwardly projecting lip, 14^x, of sufficient width to guard the edge of the insulation strip and the conductive strip which it carries from edgewise encounter with the contact terminal when the operator happens to prematurely turn the contact carrier or plug before it is pressed inwardly to the limit so as to enter safely behind the conductive strip.

In Figure 12, there is shown a further detail modification of this lip construction for guarding against the liability of deforming or breaking the contact terminal by the premature turning of the contact carrier, the lip, 14^x, being for this purpose beveled, as seen at 14^y, the bevel, preferably as shown, extending nearly to the corner which defines the side of the slot, thus making the bevel not merely a bevel of the lip, 14^x, but a bevel of the rabbeted edge of the casing member which forms one side of the slot. In order that the lip may be wide enough to guard not only against edgewise encounter of the contact terminal with the insulation strip, but also against edgewise contact with the conductive strip, and at the same time ensure that the contact terminals shall make proper conductive contact with the surface of the conductive strip, it is of advantage to form the contact terminals as shown in Figure 12, slightly flexed back at the ends, as seen at 40^m.

I claim:

1. In a construction for the purpose indicated, in combination with a structural molding having a longitudinal cavity for accommodating the wires of an electric circuit, an insulating strip and a conductive strip, the insulating strip being of penetrable material the conductive strip being secured to the insulating strip by securements extending from the latter through the former and clinched over onto the insulating strip at the opposite side thereof from the conductive strip, and a second insulating strip dimensionally mated to the first and applied to the first at the side at which said securements are clinched and secured to said first strip at the lateral margins of the two mated strips constituting the excess of width of the insulation strips over the conductive strip.

2. In a construction for the purpose indicated, in combination with a structural molding having a longitudinal cavity for accommodating the wires of an electric circuit, an insulating strip and a conductive strip, the insulating strip being penetrable and flexible for folding upon itself the conductive strip secured to the insulation strip by securements extending from the latter through the former and clinched over onto the insulating strip at the opposie side thereof from the conductive strip, the insulating strip being wider than the conductive strip to afford substantial lateral margins at both sides of the conductive strip and to comprise at one side a width for forming a covering strip by folding longitudinally to lap one-half the width over the other half thereby covering the clinched securements.

3. An article of manufacture for the purpose indicated consisting of a longitudinally hollow casing comprising a flat faced bar adapted to serve as an element of the interior finish of an apartment wall, and a pair of cooperating bars each longitudinally rabbeted mounted on said flat face of the first mentioned bar with their rabbets facing each other and the flat face of the first mentioned bar, and with the proximate edges of said rabbeted bars spaced apart to form a relatively narrow longitudinally extending slot communicating with the longitudinal channel defined by the flat face of the first mentioned bar and the rabbets of the rabbeted bars; a pair of electrically conductive strips and insulating strips on which they are respectively mounted, said conductive strips being mounted by means of the insulating strips in the rabbets of said rabbeted bars respectively, whereby they are exposed for circuit connection in the longitudinal channel mentioned at opposite sides of the longitudinal slot mentioned, the conductive strip being secured to the insulating strip by securing lugs struck from the conductive strip and penetrating the insulating strip and clinched down on the opposite side of the latter, and a second insulating strip applied to the first at the side opposite the conductive strip for insulating the clinching lugs.

In testimony whereof, I have hereunto set my hand at Chicago, Illinois, this 17th day of July, 1930.

MICHAEL W. McARDLE.