Dec. 3, 1940. J. G. MEJEAN 2,224,057

RESPIRATORY MASK

Filed April 27, 1937 2 Sheets-Sheet 1

Fig. 1

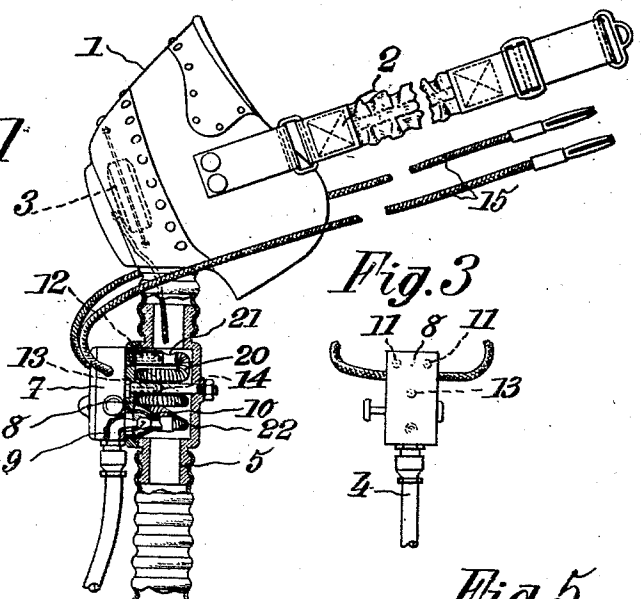

Fig. 3

Fig. 2

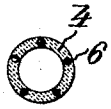

Fig. 5

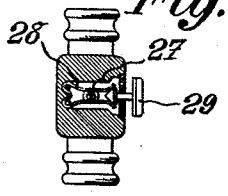

Fig. 4

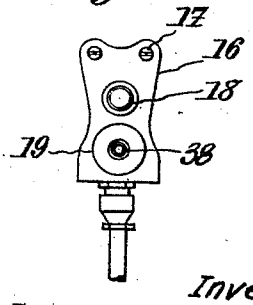

Inventor:
Jacques Gustave Mejean,

Bailey & Carson
Attorneys

Dec. 3, 1940. J. G. MEJEAN 2,224,057

RESPIRATORY MASK

Filed April 27, 1937 2 Sheets-Sheet 2

FIG. 6.

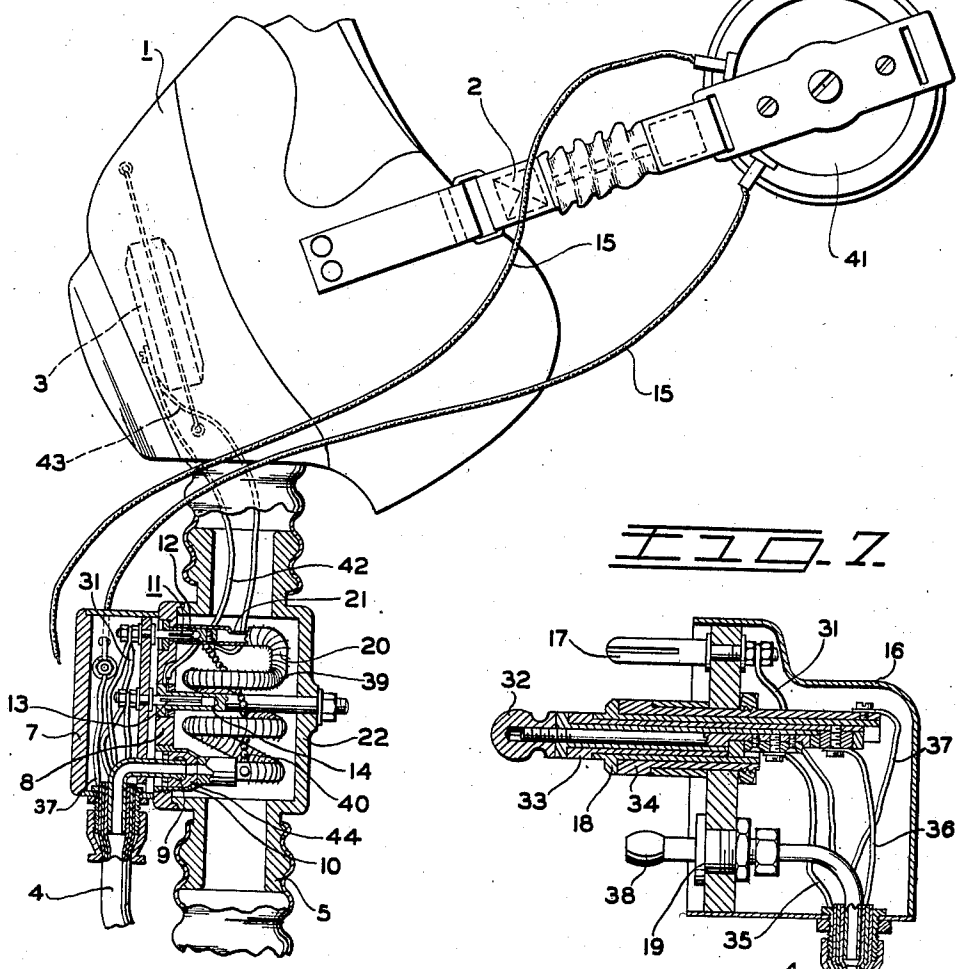

FIG. 7.

Inventor

JACQUES GUSTAVE MEJEAN

By Bailey & Parsons

Attorneys

Patented Dec. 3, 1940 2,224,057

UNITED STATES PATENT OFFICE

2,224,057

RESPIRATORY MASK

Jacques Gustave Mejean, Chatou, France, assignor to Societe Bronzavia, Courbevoie, Seine, France, a society of France

Application April 27, 1937, Serial No. 139,309
In Belgium May 6, 1936

7 Claims. (Cl. 128—190)

The present invention relates to the fittings of respiratory masks and equivalent devices including several elements (for instance the mask proper, a microphone, telephonic receiving means, means for heating the gas or gaseous mixture to be breathed, and so on) which are to be connected to a distance to various feed sources or other control or connection devices.

The object of the present invention is to provide a system of fittings which is better adapted to meet the requirements of practice than those used up to this time, and, in particular, a system with which the person making use of the mask (for instance, on an aircraft, the pilot or a passenger) runs no risk of being confused by the presence of multiple tubes or connections.

The essential feature of the present invention consists in arranging a system of the type above referred to in such a manner that at least some of the parts serving to the connection to a distance with the feed sources or other external devices are grouped into a kind of single tube provided at its ends with suitable connecting devices.

Another important feature of the present invention relates to masks adapted to be connected through a tube with a bottle or vessel through which the outflow of the expired gases takes place, these masks further including a telephonic transmission system. This feature consists in making the tube above referred to in two portions, to wit one adjoining the mask and to which leads the respiratory gas conduit, with eventually heating means and telephonic wires, and the other portion adjoining said bottle or vessel and being adapted to be connected in a removable manner to the first one.

Other features of the present invention will result from the following detailed description of a specific embodiment thereof.

A preferred embodiment of the present invention will be hereinafter described, with reference to the accompanying drawings, given merely by way of example, and in which:

Fig. 1 is an elevational view, partly in section, of the whole of a respiratory mask and the parts connected therewith, this system being devised according to the present invention;

Fig. 2 is a sectional view showing, on an enlarged scale, the oxygen feed tube with the connection wires of the various electrical devices, according to the invention;

Fig. 3 is a side view showing separately the coupling means provided at one end of said oxygen tube;

Fig. 4 is a view similar to Fig. 3 showing the coupling means corresponding to the other end of said tube;

Fig. 5 is a section, on the line 5—5 of Fig. 1, of a removable assembling device for the conduit carried by the mask.

Fig. 6 is an enlarged fragmentary detail of Fig. 1; and

Fig. 7 is an enlarged fragmentary detail in section, of the related plug element and connected tubes, shown in elevation in Fig. 1.

In the embodiment of the invention illustrated by the drawings, a respiratory mask is fitted with air or oxygen feed means, means for heating said respiratory gas, a microphone and telephonic ear-pieces.

According to the present invention, this system is arranged in such manner that the connections which are to be provided between the mask and its accessories, on the one hand, and the feed sources or other devices, on the other hand, are grouped together, along a suitable portion of their length, into a single tube or the like.

The whole is arranged in such manner that an aircraft pilot or other person making use of this system does not risk becoming entangled in a multiplicity of wires as is the case with known systems.

Such a system can be made in various manners, for instance that hereinafter explained in detail by way of example.

In this embodiment of the invention, the mask proper is of any suitable type, including, for instance a kind of hollow cup 1, which is at least partly flexible and is fitted with fixation bands 2 for securing it to the head.

The gas to be breathed is fed to said mask through a suitable orifice.

With this mask there is combined, on the one hand a microphone 3, located inside the mask for instance opposite the mouth of the person wearing said mask, and, on the other hand, earpieces 41 (Fig. 6) which are carried by the fixation straps 2.

With such an arrangement, the inflow of the respiratory gas, and the feed of electric current for the telephonic and heating systems are ensured by means of a tubular conduit 4 which is preferably flexible.

This conduit is arranged in such manner that:

(a) The flow of the respiratory gas either directly into the mask or to a device carried by the mask, for instance a conduit 5 opening into said mask, takes place through the inner space of said conduit 4; and,

(b) The wires above mentioned are associated with said conduit 4, either by extending inside the space for the flow of the gas, or by running inside the wall of said tubular conduit, as shown at 6 in Fig. 2, or again by being provided on the outside of said tubular conduit.

According to the invention, this tubular conduit may be made of a composition of rubber, a fluidtight fabric, a metal, or, generally speaking, any matter suitable for use in the manufacture of flexible tubes. I may also make use of a tube consisting of rigid elements, provided they are suitably articulated to one another.

At one of the ends of the tubular conduit in question, there is provided a fixation plug or any other equivalent means. Advantageously, according to the present invention, two fixation plugs of this kind are provided at the ends of said tubular conduit, respectively.

The fixation plug 7 provided on the side of the mask, and which is adapted to fit in a female piece 8 of the casing 22, includes, for instance, the following elements:

An oval sleeve part 9, adapted to engage into a recess 10 of the female piece 8, the whole ensuring the continuity of the stream of respiratory gas;

Two pegs 11 for the heating current coacting with two sockets 12;

And at least one third peg 13, coacting with a socket 14 connected with the microphone.

Current may be fed directly to the ear pieces through wires 15 branched to plug element 7.

In order to reduce the number of pegs, the telephonic current may return through the heating circuit.

The relay plug element 16 provided at the other end of the tubular conduit is adapted for connection to stationary electric and gas supply relays secured to the aircraft and includes, for instance, in a similar way, two pegs 17 for the heating current and a jack 18 for the telephonic current. Furthermore, the inside of tube 4 communicates with a sleeve 19 (or an oval male piece) adapted to coact with a male (or female) piece in the cockpit of the aircraft, as indicated by the plug 38 shown in Figs. 1 and 4.

Eventually, the heating of the gas arriving at 10 is obtained by means of a spiral-shaped tube 20 mounted in female piece 8. An electric resistance is provided inside or outside said tube 20 and the hot gas is evacuated through a hole 21 toward conduit 5. This heating system is for instance mounted in a casing 22 forming an extension of said conduit 5, said casing being closed by piece 8.

Finally, tube or conduit 5 and said casing may communicate, in the known manner, with an expansion bottle 24, which may be opened to the atmosphere, this bottle permitting, in the known manner, of determining the ratio of oxygen and carbonic acid gas, so that the pilot can again breath a portion of the expired gases.

In order to enable the pilot to breathe without difficulty at low height, where no inflow of oxygen is provided, tube 5 is advantageously divided into two portions one of which, attached to the mask, may include the various parts above mentioned, whereas the other one, attached to the bottle, may be fixed in a removable manner to the first one.

For this purpose, for instance, I make use of fixation means consisting of two union elements 25 and 26 one of which includes a lug 27 adapted to engage between the branches of a clip 28 carried by the other element, said clip, controlled by means of a knob 29, fitting in a groove 30 of said lug 27.

The connections between the conductors in the tube 4 and the elements in the plug 7 and complementary casing 22 are illustrated in detail in Fig. 6, while the connections between the conductors and the elements of the relay plug 16 are shown in Fig. 7.

The connection provided between the respective parts illustrated in Figs. 6 and 7 is hereinafter described by means of a description of the respective operative circuits provided thereby, and it will be understood, with reference to Figs. 6 and 7, that the oxygen supply is provided by means of the plug connection 38 through the tube 4 (Figs. 6 and 7) up to the plug inlet 9 where the oxygen is circulated through the heating element 20 exhausting into the mask 1 through the opening 21 provided in the tubular heating element 20.

A heating coil extends about the heating element 20, and this heating coil is energized by a circuit beginning at the contact blades 17 (one omitted in Fig. 7) and extending through two wires 31, which are connected to the blades 17. These wires 31 extend through the coils of the tube 4 upwardly to the plug 7, wherein one is connected to a contact blade 11 and the other directly to the heating resistance 39 as shown in Fig. 6. The other end of this heating resistance 39 is connected by means of an insulated conductor 40 to the contact blade 11 which has the other wire 31 connected thereto as described above. The heating circuit therefore, extends from one contact blade 17 through a wire 31, through the heating resistance 39 and thence through conductor 40 contact blade 11, through the second wire 31 to the second contact blade 17.

The microphone 3 is connected from the head 32 of the jack 18 through wire 35 to contact blade 13 from which a connection is provided by the wire 42 to the microphone and the circuit extends thence through the microphone, through wire 43 to the heating resistance element 39 and thence through one of the wires 31 and its connected contact blade 17.

The earphones 41 are connected from the jack 18 through contacts 33 and 34 which are connected to wires 36 and 37 and extend through the tube 4 and are directly connected to wires 15 and thus to the earphones 41.

It is thus to be seen that an extremely simple series of circuits has been provided and that the simplicity thereof as illustrated in Figs. 6 and 7 constitutes a substantial advance over the practice of the prior art.

A very important advantage of the device above described over devices of the same kind made up to the present time is that it does not interfere with the movements of the pilot.

While I have, in the above description, disclosed what I deem to be a practical and efficient embodiment of the present invention, it should be well understood that I do not wish to be limited thereto as there might be changes made in the arrangement, disposition and form of the parts without departing from the principle of the present invention as comprehended within the scope of the appended claims.

What I claim is:

1. A gas mask device comprising a mask, a breathing tube extending from said mask, a gas conduit connected to and extending from said tube, electrical means for said mask, and elec-

trical conductors carried by said conduit for connection with said electrical means, said electrical means comprising an electrical heating element mounted in said tube, and means for detachably connecting said conductors to said heating element.

2. A gas mask device comprising a mask, a breathing tube extending from said mask, a gas conduit connected to and extending from said tube, electrical means for said mask, and electric conductors carried by said conduit for connection with said electrical means, said electrical means comprising a microphone and earphones for said mask and an electrical heating element mounted in said tube, a plug receptacle housing mounted in said tube and enclosing said element, a plug secured to an end of said conduit, and means for detachably connecting said conduit to said housing to pass gas from said conduit through said heating element and to make electrical connections between said conductors and said heating element and said microphone.

3. A gas mask device comprising a mask, a breathing tube connected to said mask, electrical elements consisting of a microphone, earphones and an electrical heater associated with said mask, and a gas conduit, a plurality of electrical conductors integrally formed with and carried by said conduit, plug means secured to one end of said conduit for detachably connecting said gas conduit to said tube and said conductors to said heater, microphone and earphones, and second plug means on the other end of said conduit for detachably connecting said gas conduit to a gas supply and said conductors to current sources.

4. A device as in claim 3, said conductors comprising five wires, two of said wires forming circuit means for said earphones, a second two of said wires forming circuit means for said heater, and a fifth wire and one of said second two wires forming circuit means for said microphone.

5. A respiratory mask construction comprising a mask adapted to be supported upon the head of a wearer thereof, electrical apparatus supported by said mask for the use of said wearer, a flexible conduit connected at one end to said mask for supplying respiratory gas to said mask, a plurality of electrical conductors integrally formed with said conduit and connected with said apparatus, and a plug-in receptacle secured to another end of said conduit, said receptacle comprising an outlet connecting projection for establishing communication for gas flow in said conduit, and a plurality of projections for establishing contact with said conductors with a source of electrical current.

6. A communication unit comprising a flexible conduit adapted to conduct a gas, a plurality of electrical conductors integrally formed with said conduit and insulated from each other, plug-in receptacles joined to each end of said conduit, each receptacle having conduit plug-in means for establishing communication between said conduit and connecting gas flow devices, and separate plug-in means for connecting each of said conductors to communicating electrical means, whereby said receptacle can be attached to a plug for securing simultaneous gas and electric flow through said conduit.

7. A unit as in claim 6, each conduit plug-in means comprising a tubular member projecting from said receptacle and adapted to engage a complementary tube for establishing communication therewith, and each of said separate plug-in means comprising an electrical conducting member joined to its respective conductor, and adapted to engage a complementary member in electrical contact.

JACQUES GUSTAVE MEJEAN.