July 23, 1957 W. E. LEWIS 2,799,937

APPARATUS FOR RULING NEGATIVES IN THE PHOTOLITHOGRAPHIC ART

Filed March 6, 1953 2 Sheets-Sheet 1

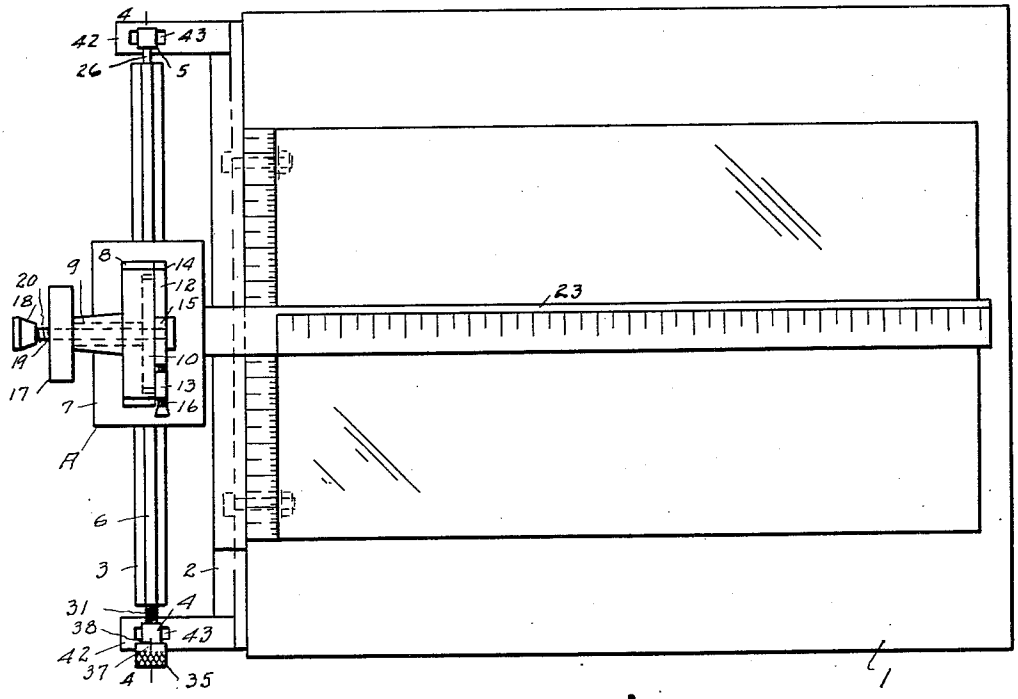

Fig. 1.

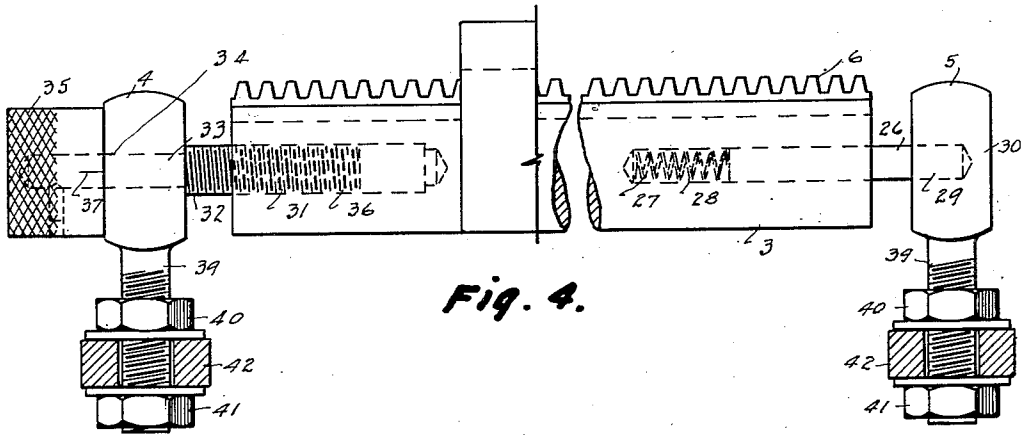

Fig. 4.

William E. Lewis
Inventor
Emmet G. Stark
Atty

July 23, 1957 W. E. LEWIS 2,799,937

APPARATUS FOR RULING NEGATIVES IN THE PHOTOLITHOGRAPHIC ART

Filed March 6, 1953 2 Sheets-Sheet 2

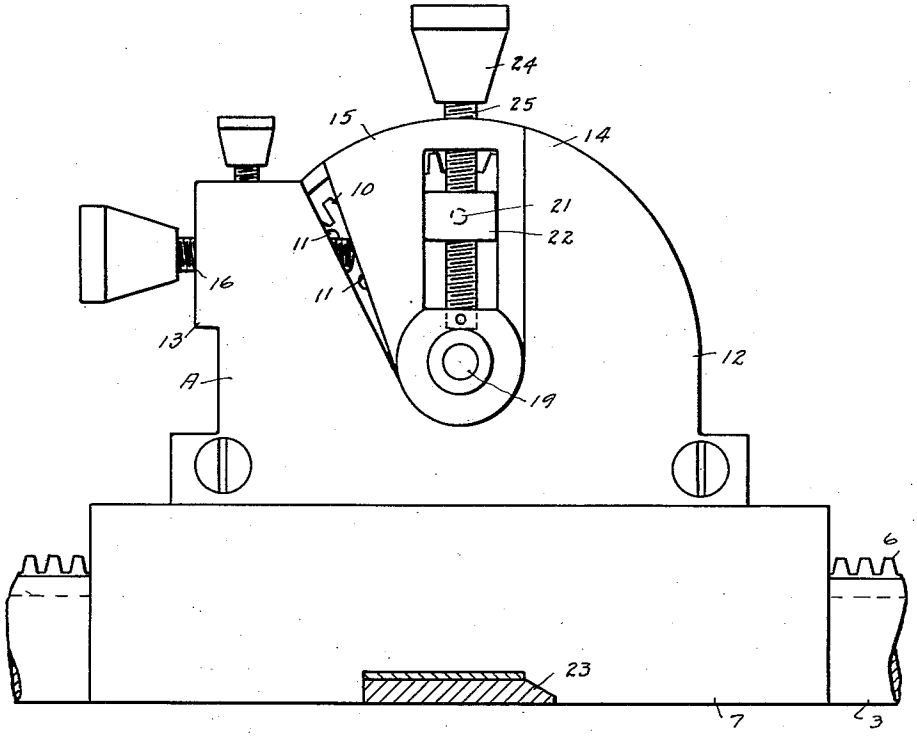

Fig. 2.

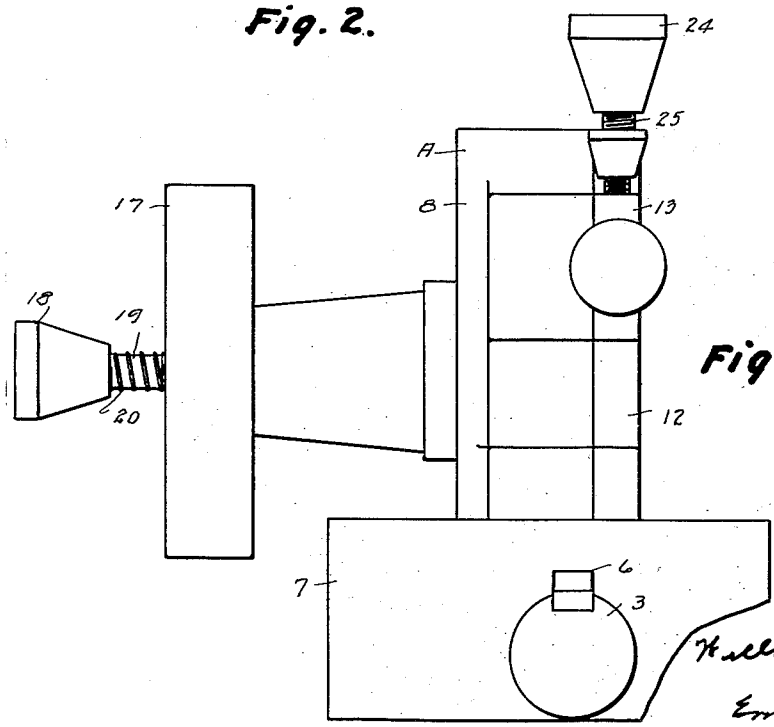

Fig. 3.

William E. Lewis
Inventor
Emmet E. Stark
Atty

United States Patent Office

2,799,937

Patented July 23, 1957

2,799,937

APPARATUS FOR RULING NEGATIVES IN THE PHOTOLITHOGRAPHIC ART

William E. Lewis, Portland, Oreg.

Application March 6, 1953, Serial No. 340,751

5 Claims. (Cl. 33—76)

This invention relates to improvements in the apparatus for ruling negatives in the photolithographic art described in Patent No. 2,657,467, dated November 3, 1953.

It has for its principal objective the provision of a simple means to align the ruling blade with a predetermined point on a negative. Other objectives and advantages will come to light as we proceed with the specification.

In the co-pending application the principal objective was the ruling of double lines of any desired spacing within the capacity of the apparatus.

Since this is brought about by providing for a predetermined backlash of the indexing pin-carrying arm as was described it is apparent that the space between the double lines will be subtracted from the space between the single lines.

The above mentioned fact is not always desirable. If necessity demands, the single spacing may be preserved and the double line had with the present apparatus.

Present day business forms are quite complicated and require exactness. For instance, a form may require a plurality of lines of a desired spacing arranged in groups separated by odd spacings.

With the present apparatus any arrangement of lines may be ruled consecutively without having to reset the negative.

In the apparatus set forth under Patent No. 2,657,467, provision is made to rule lines having spacings from 1 to 7 per inch. It often happens that like odd spacings are desirable. With the present apparatus these odd spacings may be had as follows: By adding to or subtracting from any spacing any desired amount. As an example, we may want to divide 3¼" into 20 equal spaces. This may be accomplished by setting the apparatus to rule six lines to the inch and then adding enough to each move or step to come out. All the above and other desirable possibilities may be effected by the apparatus to be described herein.

Fig. 1 of the drawings of said apparatus is a plan view showing the apparatus mounted on the ruling board; Fig. 2 is an enlarged side elevation of the apparatus; Fig. 3 is an enlarged end elevation of said apparatus; Fig. 4 is an enlarged partial vertical section thru the guide bar ends on the line 4—4 of Fig. 1.

Thruout the drawings and the specification similar numerals refer to similar parts.

All the objectives set forth in Patent No. 2,657,467 may be had with the apparatus set forth in this application together with the new objectives. For the minute description of the apparatus those interested in the art are referred to said Patent No. 2,657,467.

In Figs. 1, 2, and 3 of the present application are shown the ruling board 1, the bracket 2 attached thereto on which the apparatus A is mounted, the guide bar 3, the guide bar supports 4 and 5 on each end of the bracket 2, the rack 6 on the guide bar 3, the block 7 adapted to be moved over the rack 6, the standard 8 on said block 7, the hollow shaft 9 journalled in the standard 8, the gear 10

in mesh with the rack 6 and mounted to rotate with the hollow shaft 9, one of the index holes 11 in the side of said gear 10, the bifurcated cover plate 12 secured to the block 7 having spaced apart portions 13 and 14 between which is positioned the radial arm 15 axially movable with respect to the hollow shaft 9 and circumferentially between the portions 13 and 14 of the cover plate 12. Fig. 2, shows the radial arm 15 to have less width than the distance between the spaced apart portions 13 and 14 and it also shows the adjustable contact screw 16 in the portion 13 by which the circumferential movement of the radial arm 15 may be regulated. Fig. 1, also shows the handwheel 17 on the end of the hollow shaft 9 as the means for rotating said shaft 9, the button head 18 on the rod 19 slidably mounted in the bore of the hollow shaft 9 to move the radial arm 15 axially away from the gear 10 and the coil spring 20 which constantly serves to urge said radial arm 15 toward the gear 10 whereby the pin 21 on the adjustable nut 22 mounted on the radial arm 15 may enter an index hole 11 in the gear 10 when centered therewith.

From the above it is apparent that the radial arm 15 may be pinned to the gear 10 and thus rotate with it or unpinned therefrom to rotate independently thereof.

In operation the operator applies pressure on the button head 18 with the palm of his hand to remove the pin 21 from the index hole 11 it may be in. He then begins to rotate the handwheel 17 and at the same time stops applying pressure to the button head 18 thereby allowing the pin 21 to enter the next index hole 11 as it centers therewith, due to the urging of the coil spring 20, and thus prevent further rotation of the handwheel 17 and incidently the gear 10, since the radial arm 15, by which the pin 21 is carried, normally bears against the stop portion 14. When further rotation of the gear 10 is arrested the operator scribes the line on the negative (not shown) using the ruling blade 23 secured to and movable with the block 7.

As long as single lines are wanted the operation so far described is repeated. When a double line is wanted the operator rotates the handwheel 17, and incidently the gear 10, in the opposite direction while the gear 10 and the radial arm 15 are pinned together, until said radial arm 15 comes into contact with the contact screw 16 whereupon the double line is scribed or drawn on the negative.

There are a plurality of the holes 11 arranged in a plurality of hole circles (not shown) with the holes in each circle being spaced a predetermined distance apart. By means of the button 24 on the screw 25 the nut 22 may be moved to bring the pin 21 into alignment with a desired hole circle. By adjusting the contact screw 16 the backlash of the radial arm 15 may be limited to permit a predetermined spacing between the double lines.

The apparatus above described, shown in Figs. 1, 2, and 3, is similar to the apparatus set forth in Patent No. 2,657,467, and like it may accomplish the objectives sought therein. In order to accomplish the objectives of this application too the apparatus is modified as shown in Fig. 4.

The guide bar 3 shown in Fig. 4 has one end counterbored to receive a slidable rod 26 and a coil compression spring 27 positioned between the end of the rod 26 and the end of the counterbore 28. The opposite end of the rod is axially movable in a bearing 29 formed in the guide bar support 5 and is confined therein against the pressure of the coil spring 27 by the material 30 left at the end of the counterbore. The opposite end of the guide bar 3 is tapped for the reception of the threaded rod 31 whose opposite end is turned down to form a shoulder 32 to collar against the guide bar support 4 which has a bearing 33 formed therein for the reception of the turned-down end 34 of the threaded rod 31. This turned-down end 34

extends beyond its bearing 33 into the knurled knob 35 which collars against the adjacent face of the guide bar support 4. Since the threaded rod 31 is held against axial movement it becomes apparent that the guide bar 3 will be moved axially when the knob 35 is rotated, and it is further apparent that when the guide bar 3 is moved axially in either direction the block 7 and the ruling blade 23 move with it. Therefore, by rotating the knurled knob 35 the ruling blade may be aligned with any point on the negative, and by rotating said knurled knob 35 after a single line is scribed a double line may be drawn without encroaching on the single line spacing.

I usually cut the threads 36 on the rod 31 sixteen to the inch, therefore it is apparent that one revolution of the knurled knob 35 will move the ruling blade 23 1/16 of a ninch. With a knurled knob 35 1" in diameter and a screw with sixteen threads to the inch a very fine adjustment of the ruling blade 23 may be had. To facilitate this adjustment I scribe a line 37 on the quarter of the knurled knob 35 and a line 38 on the top of the guide bar support 4.

I have shown the guide bar supports 4 and 5 of square stock with one end 39 turned down and threaded and provided with the nuts 40 and 41 positioned on each side of the support extensions 42 on each end of the bracket 2. These extensions 42 are provided with the slots 43 for the reception of the threaded ends 39 of the guide bar supports 4 and 5. This arrangement of the guide bar supports permits the apparatus to be adjusted vertically so that work of different thickness may be accommodated under the ruling blade 23. The slots 43 permit angular adjustment of the ruling blade 23 with respect to a negative on the board. The threaded rod 31 not only permits an alignment of the ruling blade 23 but permits the usual spacings to be stretched out or shortened up to come out with a predetermined number of spacings between fixed points.

What is new in the art and different from the disclosures in Patent No. 2,657,467 is set forth in the following claims.

I claim:

1. In an apparatus for ruling negatives in the photolithographic art having a guide bar and a ruling blade carrying-block adapted to be moved over the guide bar; a mounting for said guide bar including a rod in one end of said guide bar over which the guide bar is movable axially, a rod threaded into the opposite end of said guide bar and held from axial movement, and means to rotate the threaded rod to move the guide bar axially forward and backward.

2. In an apparatus for ruling negatives in the photolithographic art having a guide bar and a ruling blade carrying-block adapted to be moved over the guide bar; a mounting for said guide bar including a rod in one end of said guide bar over which the guide bar is movable axially, a spring positioned to oppose axial movement of the guide bar, a rod threaded into the opposite end of said guide bar and held against axial movement, and means to rotate the threaded rod to move the guide bar forward and backward.

3. In an apparatus for ruling negatives in the photolithographic art having a guide bar and a ruling blade carrying-block adapted to be moved over the guide bar; a mounting for said guide bar including a ruling board, a bracket secured to the ruling board, a pair of spaced apart supports thereon having lateral and vertical adjustment, said guide bar having one end provided with a smooth counterbore and the opposite end with a tapped counterbore, a rod carried by one support for reception in the smooth counterbore, a rod having one end collared in the other support and its opposite end threaded into the tapped counterbore, a knob to rotate the threaded rod, and a coil spring in the smooth counterbore between the counterbore end and the end of the rod therein.

4. In an apparatus for ruling negatives in the photolithographic art having a guide bar and a ruling blade carrying-block adapted to be moved over the guide bar; a mounting for said guide bar including a ruling board, a bracket secured to the ruling board, a pair of spaced apart supports thereon having lateral and vertical adjustment, said guide bar having one end provided with a smooth counterbore and the opposite end with a tapped counterbore, a rod carried by one support for reception in the smooth counterbore, a rod having one end collared in the other support and its opposite end threaded into the tapped counterbore, and a knob to rotate the threaded rod.

5. In an apparatus for ruling negatives in the photolithographic art having a guide bar with a tapped counterbore in one end thereof and a ruling blade carrying-block adapted to be moved over the guide bar; a mounting for said guide bar including a pair of spaced apart supports one adapted to permit axial movement of the guide bar and the other provided with a rod held against axial movement in said support, said rod having a portion threaded into the tapped counterbore of the guide bar and a knob to rotate the threaded rod forward and backward.

References Cited in the file of this patent

UNITED STATES PATENTS

173,502	Scatcherd	Feb. 15, 1876
242,625	Gardam	June 7, 1881
304,521	Gardam	Sept. 2, 1884
2,100,114	Walsh	Nov. 23, 1937
2,467,899	Lowkrantz	Apr. 19, 1949
2,657,467	Lewis	Nov. 3, 1953
2,675,619	Cone	Apr. 20, 1954

FOREIGN PATENTS

568,412	Great Britain	Apr. 4, 1945