May 13, 1924. 1,493,692

T. A. MIXON

DENTAL CASTING MACHINE

Filed Sept. 10, 1921 3 Sheets-Sheet 1

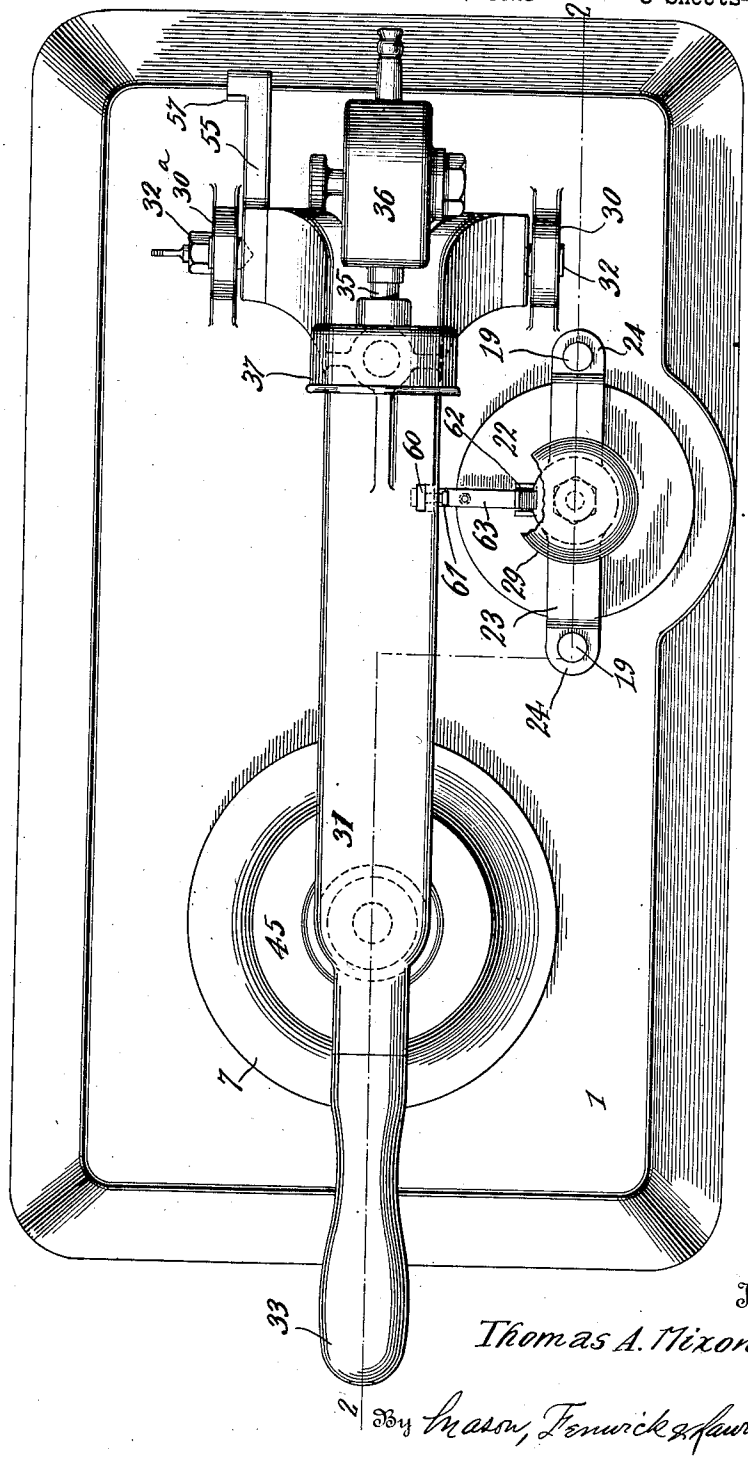

Fig. 1.

Inventor
Thomas A. Mixon
By Mason, Fenwick & Lawrence
Attorneys

May 13, 1924. 1,493,692

T. A. MIXON

DENTAL CASTING MACHINE

Filed Sept. 10, 1921 3 Sheets-Sheet 2

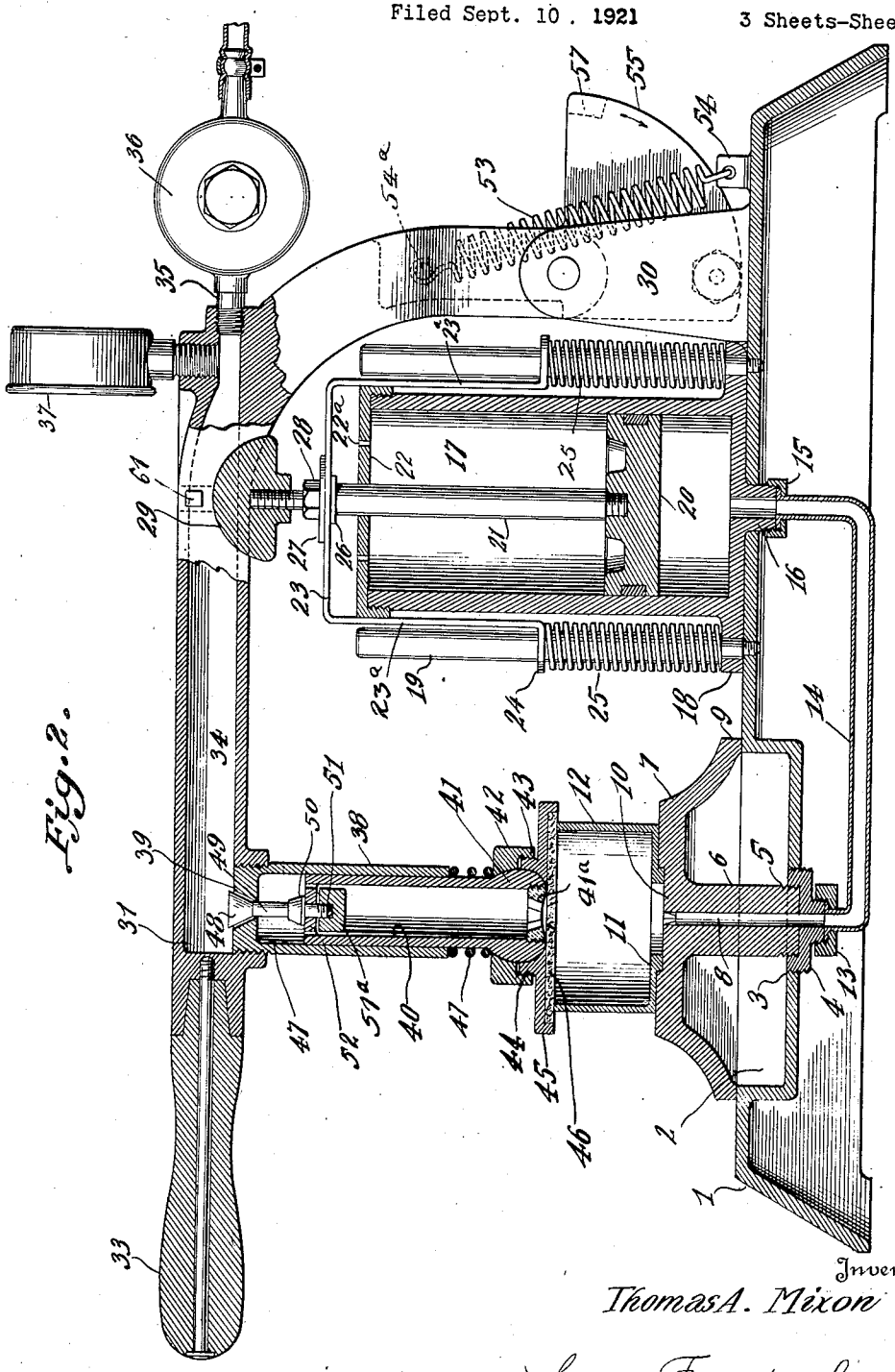

Fig. 2.

Inventor
Thomas A. Mixon
By Mason, Fenwick & Lawrence
Attorneys

May 13, 1924. 1,493,692

T. A. MIXON

DENTAL CASTING MACHINE

Filed Sept. 10, 1921 3 Sheets-Sheet 3

Fig. 4.

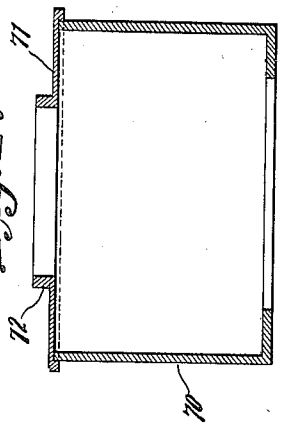

Fig. 5.

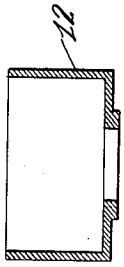

Fig. 6.

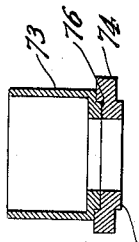

Fig. 7.

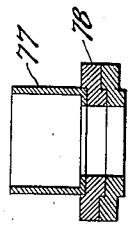

Fig. 3.

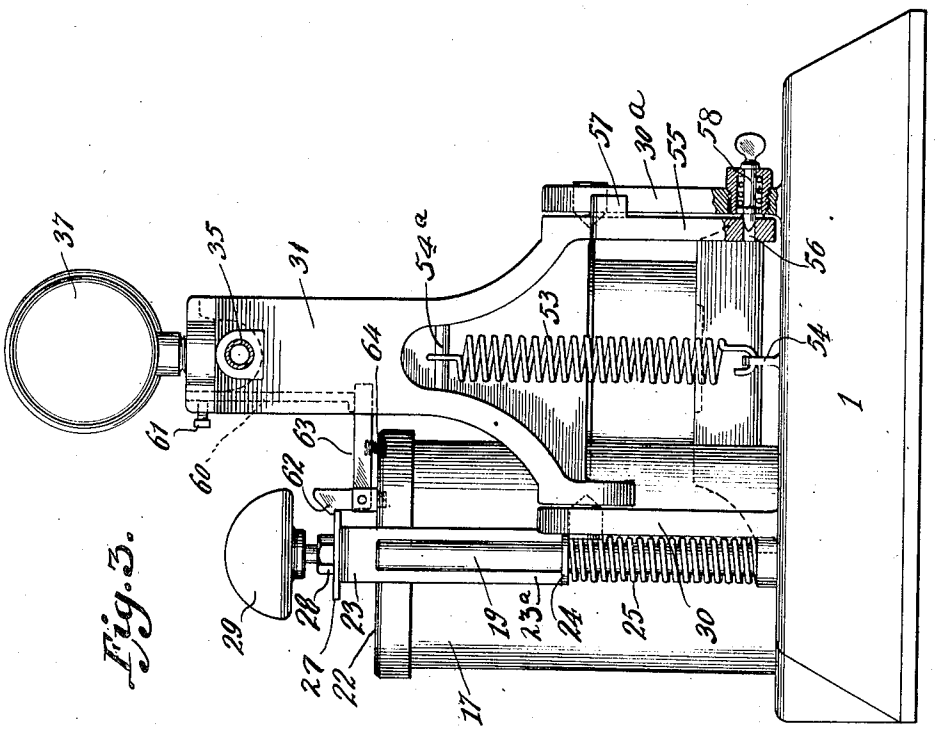

Inventor

Thomas A. Mixon

By Mason, Fenwick & Lawrence

Attorneys

Patented May 13, 1924. 1,493,692

UNITED STATES PATENT OFFICE.

THOMAS A. MIXON, OF ATLANTA, GEORGIA.

DENTAL CASTING MACHINE.

Application filed September 10, 1921. Serial No. 499,654.

To all whom it may concern:

Be it known that I, THOMAS A. MIXON, a citizen of the United States, residing at Atlanta, in the county of Fulton and State of Georgia, have invented certain new and useful Improvements in Dental Casting Machines; and I do hereby declare the following to be a full, clear, and exact description of the invention, such as will enable others skilled in the art to which it appertains to make and use the same.

This invention relates to dental casting machines or the like, and more particularly to casting machines of this type in which air pressure is applied on top of the casting during the casting operation and simultaneously air is withdrawn from the mold.

The object of this invention is to make perfect castings of gold inlays, bridges, crowns, abutments, and partial or full metal dentures, used in the dental profession; or in the jewelry trade to enable various articles of precious metal, where a wax or other form of disappearing pattern is used, to be accurately cast.

The invention comprises a mold flask, or casting cup, in combination with mechanism for applying air pressure to the top of the casting in the mold and simultaneously withdrawing air from the mold cavity through the bottom of the cup. It comprises, also, various subcombinations and details of construction more fully set forth in the ensuing description, illustrated in the accompanying drawings and defined in the appended claims.

In the accompanying drawings in which like reference characters designate like parts throughout the several views:

Figure 1 is a top plan view of the complete apparatus;

Figure 2 is a longitudinal section on the irregular line 2—2 of Figure 1;

Figure 3 is an elevation of the apparatus viewed from the right hand side of Figures 1 and 2;

Figures 4, 5, 6 and 7 are details of flasks, or casting cups, with associated equipment.

In the particular embodiment of my invention illustrated in Figures 1 to 3, numeral 1 indicates a base, said base having a cavity 2, preferably in the longitudinal center line of the base and circular in form as shown, the bottom wall of said cavity having a threaded hole at 3 closed by a perforated reducing coupling 4 threaded on the exterior to engage the threaded walls of said hole 3 and having a central depression 5 interiorly threaded for engaging the hollow threaded member 6 of an adapter 7, which may be removed quickly if desired by unscrewing it, in order that, in place of the said adapter 7, a flask or casting cup 70 of large size may be fitted directly into said cavity 2. The adapter 7 has an orifice 8 extending completely through it from the top surface to the lower end of the member 6. The outer edge 9 of the adapter rests snugly upon the top surface of the base 1 around the margin of cavity 2. In the top of the adapter is a countersink or cavity 10 adapted to receive a flange 11 of a casting cup 12. The casting cup 12, or the like, is to contain the mold material in which the mold is formed and in this mold the metal to be cast may be melted, as by a blow pipe flame.

Connected to the lower reduced portion of the reducing coupling 4 by the union coupling 13 is a pipe 14 the other end of which is connected by a similar coupling 15 to a threaded hollow nipple 16 projecting from the bottom of a suction pump cylinder 17, thus establishing communication between the pump cylinder and the casting cup. The pump cylinder 17 may be secured firmly to the top of the base 1 by means of bolts or other fastenings passed through flanges 18 into the base 1. In the embodiment of the invention described the cavity 2 is located substantially along the center line of the base 1 adjacent one end thereof, while the pump cylinder 17 is secured to said base at one side of the center line for a purpose to be presently explained. Rising on opposite sides of the cylinder 17 are upright guiding standards 19 which, in the present instance, are utilized for securing the pump cylinder 17 down upon the base 1, as shown, the lower ends of said standards being reduced, passed through perforations in flanges 18 and threaded into base 1. Within the cylinder 17 is a piston 20, suitably packed, and attached to a piston rod 21, which extends upward through a central opening in the cylinder head 22 secured to the top of the cylinder in any approved manner, but shown as screw threaded thereto. Above the cylinder head 22 the piston rod 21 may be connected to a U-shaped yoke 23, the limbs

23[a] of which extend downward, parallel with each other, on opposite sides of the piston, and have perforated terminals 24 extended at right angles, the standard 19 passing through said perforated terminals 24 and serving as guide standards for the yoke. Coil compression springs 25 are disposed between the perforated terminals 24 and the base flange of the pump cylinder, said springs exerting their elastic force to push the yoke 23 upward and thereby carry the piston 20 upward. Perforations 22[a] formed in the cylinder head 22, allow free escape of air. The means for securing the yoke 23 to the piston rod comprises a collar 26 on the piston rod engaging the under side of the yoke; a large washer 27 engaging the top side of the yoke, said washer being locked down by a nut 28. Secured to the top of the piston rod 21 is a suitable handle 29 which may receive the pressure of the hand to force the pump piston downward.

Rising from that end of the base 1 which is opposite the cavity or depression 2 is a pair of bearing lugs 30, 30[a], spaced equally on opposite sides of a center line that intersects the axis of cavity 2, between which is pivoted a cover and trip-carrier arm 31 by means of conical bearing pivots 32 or by other suitable means. The said carrier arm 31 when in operative position extends upward from its pivotal bearing and then turns substantially at right angles and extends over the base 1 in substantial parallelism therewith. At the end of said carrier arm 31 is a suitable hand-hold 33 by means of which the arm may be manipulated. As shown clearly in Figure 2 the arm is hollow for a portion of its length providing an air chamber as illustrated at 34. Tapped into the arm, preferably at the end of the chamber 34 nearest the pivot, is a fluid conductor 35 for the purpose of admitting air under pressure into the hollow portion 34 of the arm. In order to regulate the pressure of the air flowing into the chamber 34 I may provide a suitable reducing valve 36; and in order to determine the pressure of the air entering the chamber 34 of the hollow arm I may provide any suitable pressure gauge 37. The end of conductor 34 opposite its connection to the lever is adapted to be coupled to a flexible pipe leading from a source of air or other gas under pressure. Communicating with the chamber 34 preferably at its upper end and carried on the under side of the arm 31 is a tubular extension 38 fitted air tight to the hollow arm and having a conical or other suitable valve seat 39 at its upper end. Telescoped into the tube 38 is a second tubular member 40 which may have a spheroidal end 41, engaged by a coupling member 42 having a correspondingly curved opening and an interiorly screw-threaded flange 43 adapted to be seated over the spheroidal end and to be coupled with an exteriorly threaded flange 44 on a cover plate 45 which is provided with an asbestos or other refractory centrally perforated packing 46 on its under side. The interior of the flange 44 is also curved spherically and engages the exterior of the head 41. Thus, the cover plate 45 is connected by means of the coupling member 42 to the head 41 of the tubular section 40 so that it has a self adjusting universal movement thereon. A refractory nipple 41[a] may be seated in the lower end of the tube section 40. A coil spring 47 disposed between the coupling member 42 and the lower end of the extension 38 keeps the said members 38 and 40 extended, relatively, so that the valve 48, which is adapted to seat on the valve seat 39, heretofore referred to, is closed. The said valve 48 is provided with a conical head, a stem 49, a shoulder 50 and a threaded extremity 51, the said stem 49 below the shoulder 50 being free to slide a limited extent in a perforated diaphragm or bridge 52 which is connected to the tubular section 40. The said bridge 52 may be a plug having perforations therethrough, an integral web, or any other suitable construction, fixed to the tube section 40, which will permit the passage of air. To the threaded extremity 51 of the shank 49 of the valve is secured a nut 51[a], preferably relatively heavy, and tending to move the valve 44 toward its seat. By this construction the spring 47 will extend the tubes 38 and 40, normally, until the extension is checked by engagement of the head of the valve 48 with the seat 39, thus maintaining the valve closed except when pressure is applied to the free end of the tube section 40.

A pull spring 53, having one end attached to lug 54, on the base 1, and the other end attached to the arm 31 above its pivot at 54[a] exerts its tension to swing the arm upward about its pivotal connection with bearing lugs 30, 30[a] to lift the arm 31. In order to limit the upward movement of the arm 31, a quadrant member 55, formed on or secured to it, extends below the pivotal axis at one side, said quadrant member having a hole 56 and a lug 57, separated about 90° from each other. When the arm is down, as it is in casting position, a spring-actuated latch pin 58 carried by and extending through the bearing lug 30[a] is in alinement with the hole 56 and will lock the arm in that position. When the latch pin 58 is pulled outward the tension of spring 53 moves the arm upward until the lug 57 engages with one edge of the bearing lug 30[a] and brings the arm to rest with the handle 33 projecting upward.

A trip finger 60 is secured to arm 31, in such manner as to be adjustable transversely

of the arm in a plane perpendicular to the base 1, that is, when the arm is in its lowered position and the base is horizontal, the finger 60 may be adjusted vertically. As shown, the arm 31 is provided with an opening at one side of its longitudinal center within which the finger 60 may slide longitudinally of itself, and a set screw 61 is provided for clamping the finger in the desired position.

Pivoted on the cylinder head 22 is a latch having an arm provided with a latch head 62 and a trip arm 63 extending substantially at right angles to the head-carrying arm into the path of the end of the trip finger 60 on the arm 31 when said arm is brought down to operative position. A spring such as 64 maintains the latch constantly in latching position. The latch head 62 engages over the washer 27, or other suitable latch engaging member, carried by some part connected to the piston rod 21.

Referring now to Figures 1, 2 and 3, the operation of the means thus far described is as follows: The mold having been suitably formed in the casting cup 12 in the known manner, the metal is fused in the mold by a blow pipe. At that time the arm 31 is in elevated position and suction pump piston 20 is locked down, in the position shown in Figures 1 and 3, by the latch, the pump piston having been previously depressed by pressure of the hand exerted upon the handle 29. At this time the tube sections 38 and 40 are extended by spring 47 and the valve 48 is closed upon the seat 39. As soon as the metal has been fused and run into the mold cavity the hand-hold 33 of the arm 31 is seized and the arm 31 pulled downward, bringing the cover 45 on top of the flask or casting cup 12. The relative position of the top of the casting cup with respect to the rest of the mechanism described is such that the tube 40 will be pushed slightly into the tube 38 and the valve 48 raised from its seat by reason of the engagement of the bridge or web 52 with shoulder 50 on the valve stem letting air under pressure flow downward through the tubes 38 and 40 and through the orifice in the end of the tube 40, cover cap and packing, into the mold. The cover 45 will adjust itself absolutely to the top of the casting cup 12 by reason of the universal jointed connection between said cover and the tube 40, the packing 46 fitting air tight on the edge of the cup. Preferably just before the valve 48 is opened by the act of seating cover plate or cap 45 over the casting cup the finger 60 presses upon the tripping arm 63 and releases the latch head 62 from its connection with the piston rod of the pump. When the piston rod is released the spring 25 bearing upon the yoke 23 moves the piston upward, the air above the piston escaping through the openings 22^a. Thus pressure is reduced on the under side of the piston and air drawn from the mold so that no air can be encased or occluded in the fluid metal being cast or prevent the fluid metal from entering the finest interstices of the mold. Pressure of the compressed air on the top of the metal, and simultaneous exhaustion of the air through the mold material, insure the perfect filling of the mold contour so that the negative contour of the mold is reproduced exactly and with the greatest nicety as a positive in the casting.

In order to accommodate molds of different size and adapt casting cups or flasks of different size to this apparatus, a variety of cups with appropriate adapters have been provided. In case a very large flask or casting cup, such as is shown at 70, is to be used, the adapter 7 is removed, the cup 70 seated in the cavity 2 and the adapting cover 71 applied to said cup 70. The said cover has a central opening surrounded by a flange 72 of lesser diameter than the cover 45 so that the same cover 45 which is adapted to fit over a smaller casting cup may be adjusted to this large cup 70. The height of the cup 70 plus the height of the cover 71 is equal to the distance from the bottom of cavity 2 to the top of cup 12 seated on adapter 7. In case it is desired to use a casting cup 73, which is still smaller than the cup 12, a second adapter 74 is fitted onto the adapter 7. On the under side of the adapter 74 is a flange 75 surrounding an opening in the adapter, which flange fits the countersink or cavity 10 in the upper side of the adapter 7; and on the upper side of the adapter 74 is a cavity which fits a flange 76 formed around the opening in the bottom of said cup 73. By this construction the cup 73, which is shallower than the cup 12, may be brought with its upper edge to the same height above the base 1 as was the cup 12 seated on the adapter 7. In the same manner a still smaller cup 77 of less height than the cup 73 may be brought into position so that its upper edge will be the same distance above the base 1, as the top of the cup 12 seated on the adapter 7, by adding a second adapter 78, as indicated in Figure 7. Thus, different sizes of casting cups by the use of adapting bases or adapting covers may be utilized on the same mechanism without making any other adjustments.

Having described my invention in such manner as to enable those skilled in the art to make and use the same what I claim and desire to secure by Letters Patent is:

1. In casting apparatus, a movable hollow carrier adapted to be connected with a source of fluid under pressure, a perforated flask cover having communication with the interior of said carrier, a universal joint be-

tween said carrier and said cover, and a valve for controlling the flow of fluid under pressure to said cover.

2. In casting apparatus, a movable, hollow carrier adapted to be connected to a source of fluid under pressure, a perforated flask cover having communication with the interior of said carrier, a universal joint between said carrier and cover, a normally closed valve controlling communication between the carrier and the perforated cover, and means for opening said valve responsive to pressure of the cover on the flask.

3. In casting apparatus, a movable hollow carrier adapted to be connected to a source of fluid under pressure, a longitudinally yieldable tubular member communicating with the hollow carrier, a perforated cover plate carried by the end of said tubular member, a valve for controlling the passage of fluid from the carrier into said member, and means actuated by a yielding movement of said member for unseating said valve.

4. In casting apparatus, a movable hollow carrier adapted to be connected to a source of fluid under pressure, a tubular extension from said carrier, a valve seat between said extension and carrier, a tubular telescoping section movable longitudinally of said extension, a valve adapted to engage said valve seat, connections between said telescoping section and valve, a perforated flask cover carried on the end of said telescoping section, and a yieldable means for extending said telescoping section.

5. In casting apparatus, a movable hollow carrier adapted to be connected to a source of fluid under pressure, a tubular extension from said carrier, a valve seat between said extension and said carrier, a tubular telescoping section movable longitudinally of said extension, a valve adapted to engage said valve seat, connections between said telescoping section and valve, a perforated flask cover connected to the end of said telescoping section, and a coiled compression spring surrounding said telescoping section between the end of the extension and the flask cover.

6. In casting apparatus, a movable hollow carrier adapted to be connected to a source of fluid under pressure, a tubular extension from said carrier, a valve seat between said extension and said carrier, a telescoping section slidably connected with said extension, a valve adapted to be seated in said valve seat, connections between said telescoping section and valve, a perforated cover universally jointed to the free end of said telescoping section, and a coiled compression spring surrounding said section between the cover and the end of the extension.

7. In casting apparatus, a movable hollow carrier adapted to be connected to a source of fluid under pressure, a perforated flask cover universally connected thereto and having communication with the interior thereof, means to control the passage of fluid under pressure to said cover, and a reducing valve for regulating the pressure of the fluid in the carrier.

8. In a casting apparatus, a movable hollow carrier adapted to be connected to a source of fluid under pressure, a perforated flask cover universally connected therewith and having communication with the interior thereof, means to control the passage of fluid under pressure to the cover, a reducing valve for regulating the pressure of fluid in the carrier arm, and a pressure gauge adapted to indicate the pressure in said carrier.

9. In casting apparatus, a base adapted to support a flask, a carrier arm pivoted to said base, a perforated flask cover universally carried by said carrier arm, means for controlling the passage of fluid under pressure to said cover, and means for normally elevating said arm with a yielding force to remove the cover from the flask.

10. In casting apparatus, a base adapted to support a flask, a carrier arm pivoted to the base, a perforated flask cover carried by said carrier arm, and means to control the passage of fluid to said cover, a spring normally acting to elevate said carrier to remove the cover from the flask, and a device to hold the arm in its lower position with the cover pressed upon the flask.

11. In casting apparatus, a base adapted to sustain a flask, a pair of bearing lugs elevated from the base, a carrier arm pivotetd between said bearing lugs and carrying a perforated flask cover, means for controlling the passage of fluid under pressure to said cover, a spring arranged to exert its tension to elevate the arm, a quadrant on the arm extending below the pivot thereof, a stop on said quadrant adapted to engage one of said lugs when the arm is elevated, and cooperating latch means on said quadrant and one of said bearing lugs adapted to hold the arm in its lowered position with the cover pressed upon the flask.

12. In casting apparatus, a base having a perforation and adapted to support a flask over said perforation, a carrier arm movably mounted on the base, a flask cover mounted on said carrier, a pump cylinder mounted on said base, a conduit connecting said cylinder with the perforation in the base, a piston in the cylinder, yieldable means for moving said piston, a latch for holding said piston against the tension of said yieldable means, and a trip carried by the arm arranged to release the latch at the time the cover is pressed upon the flask.

13. In casting apparatus, a base having a perforation and adapted to support a flask

over said perforation, a suction pump cylinder mounted on the base, a conduit connecting the cylinder with the perforation in the base, a piston in said cylinder, a piston rod connected to said piston, a yoke secured to said piston rod, means for guiding the yoke, compression spring means surrounding the guiding means and acting upon the yoke to operate the piston, a latch for holding the piston retracted and the spring means under compression, and means to release the latch.

14. In casting apparatus, a base having a depression, an orifice in said depression, a suction device mounted on the base, a conduit connecting said suction device with the orifice in said depression, a removable adapter having a central perforation adapted to communicate with said orifice, said adapter being adapted to receive a flask on its upper surface.

In testimony whereof I affix my signature.

THOMAS A. MIXON.