May 25, 1926.

1,586,167

H. R. TROTTER

GOVERNOR VALVE MECHANISM

Filed July 18, 1924

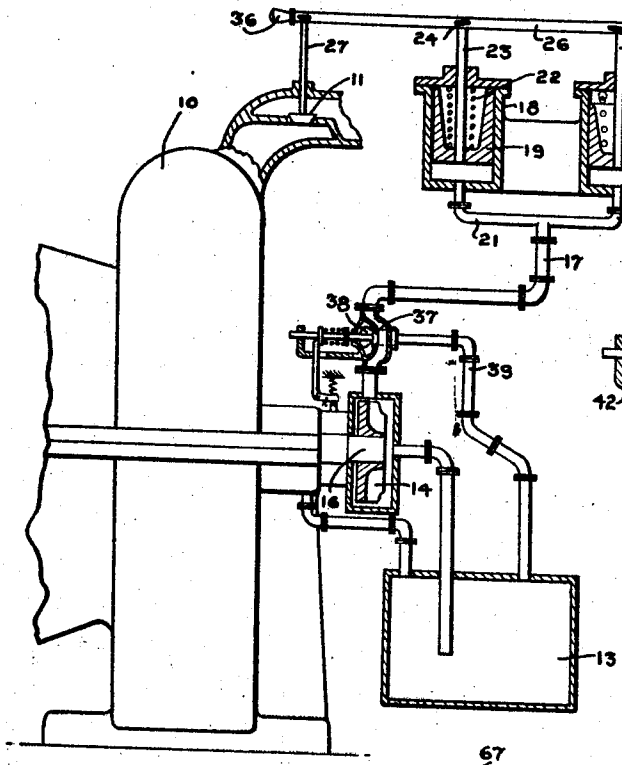

Fig. 1.

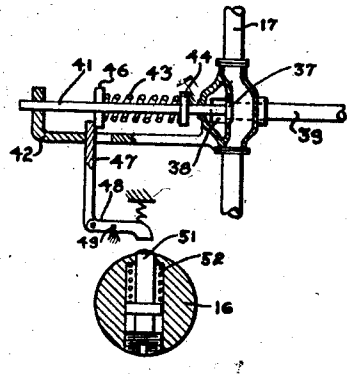

Fig. 2.

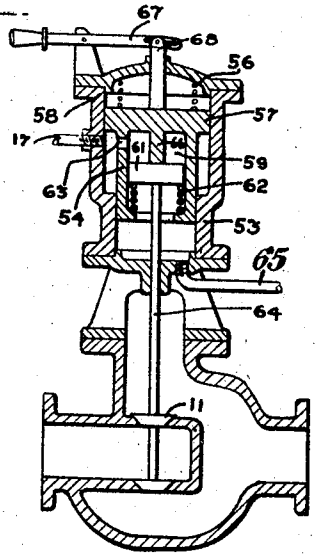

Fig. 3.

WITNESSES:

H. R. Trotter
INVENTOR

BY J. C. Davis
ATTORNEY

Patented May 25, 1926. 1,586,167

UNITED STATES PATENT OFFICE.

HENRY R. TROTTER, OF MORTON, PENNSYLVANIA, ASSIGNOR TO WESTINGHOUSE ELECTRIC & MANUFACTURING COMPANY, A CORPORATION OF PENNSYLVANIA.

GOVERNOR-VALVE MECHANISM.

Application filed July 18, 1924. Serial No. 726,882.

My invention relates to variable fluid-pressure governing apparatus for a prime mover, more particularly that class of apparatus wherein the flow of energy to the prime mover is restricted upon an increase in fluid pressure in the governing apparatus, and is increased upon a decrease in fluid pressure, and has for an object the provision of apparatus of the character designated which shall include means for stopping the flow of energy to the prime mover upon a predetermined minimum fluid pressure.

Another object of my invention is to provide, in apparatus of the character designated, means operative upon a predetermined overspeed of the prime mover, for reducing the fluid pressure in the governing apparatus to a point at or below the predetermined minimum pressure required for stopping the flow of energy to the prime mover.

Apparatus made in accordance with my invention is illustrated in the accompanying drawing in which: Fig. 1 is a view partly diagrammatic, showing a steam turbine having my improved governing apparatus applied thereto; Fig. 2 is a sectional view of a detail of the invention drawn to a larger scale; and Fig. 3 shows a modification of my invention.

The usual form of variable fluid-pressure governing apparatus embodies a pump for developing fluid pressure varying as a function of the speed of the prime mover, a cylinder having an operating piston disposed therein, said piston being subjected on one side to the variable fluid pressure and on the other side to the force exerted by a spring, and means connecting the piston to the energy-controlling means of the prime mover, such, for example, as the admission valve of a steam turbine or the starting rheostat of an electric motor.

In such apparatus, inasmuch as an increase in speed of the prime mover involves an increase in the variable fluid-governing pressure, it is necessary to so arrange the parts that the force of the spring acting against the governing piston is exerted toward increasing the flow of energy to the prime mover and the force of the variable fluid pressure is exerted toward decreasing the flow of energy thereto. It follows, therefore, that upon a sudden failure of the variable fluid-governing pressure, the energy-controlling means is forced by the action of the spring to a wide open position which permits the prime mover to overspeed, with the dangers consequent thereto.

In my invention, I have eliminated the danger referred to above by providing a second cylinder having an operating piston subjected to the force exerted by the variable fluid pressure, said force being opposed by a spring. The force exerted by the spring acting against the second operating piston is directed, however, towards decreasing the flow of energy to the prime mover and the force of the variable fluid pressure acting against the piston is directed towards increasing the flow of energy to the prime mover. This second operating piston is arranged so that, at normal ranges of speed of the prime mover, and consequent normal ranges of governing pressure, the fluid pressure beneath the piston overcomes the force exerted by the spring and renders the piston inoperative. Upon a predetermined minimum fluid pressure, however, the spring acting against the second operating piston overcomes the force of the fluid pressure thereagainst and the piston moves, shutting off the flow of energy to the prime mover independently of the first mentioned operating piston.

Referring to the drawing for a more detailed description of my invention, I show in Fig. 1 at 10, a prime mover, for example, a steam turbine, having energy-controlling means, for example, an admission valve 11, said admission valve being controlled by my improved fluid-pressure governing apparatus at 12. Fluid under pressure for operating the governing apparatus is supplied from a source, such as a reservoir 13, by a pump 14, driven by a shaft 16 from the prime mover 10. The pump 14 develops fluid under a pressure varying as a function of the speed of the prime mover and delivers it to the governing apparatus 12 through a conduit 17.

The governing apparatus at 12 comprises a cylinder 18 having an operating piston 19 disposed therein, said operating piston be-

ing subjected on one side through a branch 21 of the conduit 17 to the variable fluid pressure developed by the pump 14. The piston 19 is subjected on its opposite side to the force exerted by a spring 22. The initial load imposed upon the spring 22 is such that, at normal ranges of speed of the prime mover, the fluid pressure developed by the pump 14 is sufficient to overcome the spring 22 and the piston is forced to its uppermost position. The piston 19 remains in this position inoperative, until the fluid pressure beneath it drops to less than the initial load of the spring 22 when it is forced downwardly by the spring 22. The piston 19 is connected by a rod 23 to an intermediate point 24 of a lever 26, said lever being connected at one end by a link 27 to the admission valve 11. With normal ranges of fluid pressure acting against the piston 19 it assumes its uppermost position, as shown in Fig. 1, and the connection 24 serves as a fulcrum for the lever 26.

For controlling the admission valve 11, I provide a second cylinder 28 having an operating piston 29 subjected on one side to the variable fluid pressure through a branch 31 of the conduit 17. The piston 29 is subjected, on its opposite side, to the force exerted by a spring 32. The initial load of the spring 32 is such as to practically equal the force exerted by the governing fluid pressure when the prime mover is running at normal speed. Upon a decrease in speed of the prime mover and consequent decrease in pressure developed by the pump 14, the piston 29 moves downwardly. Upon an increase in speed, and consequent increase in pressure developed by the pump 14, the piston 29 moves upwardly.

The piston 29 is connected by a rod 33 to the end of the lever 26, at 34, opposite the connection to the admission valve. With the piston 19 in its upward position, movements of the piston 29 are transmitted to the admission valve 11 through the lever 26, the point 24, as before mentioned, acting as a fulcrum. Upward movements of the piston 29 move the admission valve 11 in a closing direction, and downward movements of the piston 29 move the valve 11 in an opening direction. The force of the spring 32 is, therefore, exerted toward opening the admission valve 11, while the force of the variable fluid pressure acting against the piston 29 is exerted toward closing the admission valve 11.

If for any reason, there is a failure of, or a decided drop in fluid pressure, below the initial load of the spring 22, in the conduit 17 leading to the governing apparatus, the force of the spring 22 overcomes the fluid pressure acting against the piston 19, forcing it downwardly. This movement lowers the lever 26 and the fulcrum 24 thereof, and closes the admission valve 11, irrespective of the position of the piston 29.

In order to start the prime mover, it is obvious that some provision must be made for opening the admission valve 11 and holding it open until sufficient pressure is developed by the pump 14 to overcome the initial load of the spring 22 acting against the piston 19. For this purpose I provide, for example, a handle 36 on the lever 26 by means of which the admission valve 11 may be raised off its seat while starting.

The apparatus so far described insures the closing of the admission valve 11 in case there should occur a sudden failure of fluid under pressure for governing purposes. It has sometimes occurred, however, that the fluid pressure developed by the pump used with apparatus similar to that illustrated, has not increased in proportion to the speed of the prime mover. This has been due, in some instances, to partial failure of inlet pressure at the pump caused by obstruction in the inlet pipe or to heating and foaming of the fluid, usually lubricating oil, used in such apparatus. In such cases, there occurs a gradual increment in speed of the prime mover without a closing movement of the admission valve until a dangerous speed is attained. It is highly desirable, therefore, that means be provided, operable upon a predetermined overspeed of the prime mover, for stopping the flow of energy thereto.

I accomplish this purpose by placing a by-pass valve 37 (Fig. 2) in the conduit 17 leading from the pump 14 to the governing apparatus. The by-pass valve 37, when seated, permits fluid under pressure to pass freely to the governing apparatus. When off its seat, fluid under pressure passes by the valve 37 through a port 38 and a conduit 39 leading to the fluid reservoir 13. This causes a sudden drop in pressure in the conduit 17 to an extent that the initial load of the spring 22 is sufficient to overcome the force exerted by the variable fluid pressure acting against the piston 19 and forces the piston downwardly, closing the admission valve in a manner already described.

The by-pass valve 37 is provided with a stem 41 slidably mounted within a guide member 42. The valve is normally held on its seat by means of a spring 43 in compression between an abutment 44, secured to the stem 41, and a movable abutment 46 which surrounds the stem 41 and normally bears against the spring 43, being held in that position by means of a latch 47. The latch 47 is pivotally connected at its opposite end to a lever 48 fulcrumed at an intermediate point 49 thereof.

Rotating with the shaft 16 of the prime

mover 10 is a well-known form of auto-stop governing mechanism embodying a tripping member 51, normally held in position by a spring 52. Upon a predetermined overspeed of the prime mover, the tripping member 51 protrudes from the shaft 16 and strikes the lever 48, releasing the latch 47 which holds the movable abutment 46. This permits the by-pass valve 37 to be unseated by the fluid pressure beneath it. The fluid leaving the pump 14 now passes to the exhaust through the port 38 and thence through the conduit 39 to the reservoir 13. The action just described causes a sudden drop in pressure in the conduit 17 followed by a closing of the admission valve 11 in a manner already described.

In Fig. 3 is illustrated means for operating the admission valve 11 of the prime mover 10 in accordance with my invention, without the intermediary lever 26 illustrated in Fig. 1.

In accordance with this modification, I provide an operating cylinder 53 which is in communication with the conduit 17 and the by-pass valve apparatus as illustrated in Fig. 1. Within the cylinder 53 is disposed a floating piston 54 which is biased in a downward direction by a spring 56. The piston 54 is provided with a flange portion 57 which has a fluid-tight fit with respect to the cylinder 53 and against which the fluid pressure developed by the pump 14 acts in opposition to the force of the spring 56. The initial load of the spring 56 is such that at normal ranges of fluid pressure the piston 54 is forced upward until the flange portion 57 comes in contact with the end of the operating cylinder, at 58, and the piston remains there, inoperative, until the pressure beneath it drops below the initial load of the spring 56.

The hollow part of the piston 54 forms a cylinder 59. Within the cylinder 59 is disposed an operating piston 61 which is biased in an upward direction by a spring 62. Fluid under pressure from the conduit 17 is admitted on top of the piston 61 through a port 63 and acts in opposition to the force of the spring 62. The initial load on the spring 62 is such as to approximately balance the normal governing pressure acting against the opposite side of the piston. Variations in fluid pressure cause the piston 61, therefore, to assume varying positions. The piston 61 is directly connected to the admission valve 11 by means of a rod 64 so that movements of the piston 61 are directly transmitted to the admission valve 11. At 65 is shown a drain conduit for carrying away leakage.

The operation of apparatus made in accordance with this modification will be apparent. During normal ranges of speed of the prime mover and consequent normal ranges of fluid pressure developed by the pump 14, the piston 54 is held in its uppermost position as already described. When moved to its uppermost position, the admission valve is opened. Thereafter, as the speed increases, and the governing pressure increases, downward movements of the piston 61, due to the increased fluid pressure, are transmitted to the valve 11 and it is moved in a closing direction. Upon a failure of, or sudden drop in pressure within the conduit 17, the spring 56 forces the piston 54 in a downward direction and a plunger portion 66 thereof engages the piston 61 forcing it downward and closing the admission valve 11.

In order to start the prime mover before sufficient pressure is developed by the pump 14 to move the piston 54 against the force of the spring 56, I provide a manually operated lever 67 connected by a rod 68 to the top of the piston 54. By means of this lever the piston 54 may be raised thereby raising the piston 61 and opening the admission valve 11, permitting the prime mover to be started.

From the foregoing, it will be apparent that I have devised an improved variable fluid-pressure governing apparatus in which, upon a predetermined minimum fluid pressure there is a positive closing off of the flow of energy to the prime mover, and that I have also provided means, operable upon a predetermined overspeed of the prime mover, for reducing the fluid pressure to a point at, or below, the predetermined minimum aforesaid.

While I have shown my invention in but two forms, it will be obvious to those skilled in the art that it is not so limited, but is susceptible of various other changes and modifications, without departing from the spirit thereof, and I desire, therefore, that only such limitations should be placed thereupon as are imposed by the prior art or as are specifically set forth in the appended claims.

What I claim is:—

1. In a fluid-pressure governing apparatus for a prime mover having energy-controlling means, the combination of means for developing fluid under a pressure varying as a function of the speed of the prime mover, a member movable in response to variations in the fluid pressure for controlling said energy-controlling means, and means operable upon a predetermined reduction in fluid pressure for stopping the flow of energy to the prime mover.

2. In a fluid-pressure governing apparatus for a prime mover having energy-controlling means, the combination of means for developing fluid under a pressure varying as

a function of the speed of the prime mover, a member movable in response to increases in the fluid pressure for actuating the energy-controlling means in a closing direction, and means operable upon a predetermined reduction in fluid pressure for stopping the flow of energy to the prime mover.

3. In a fluid-pressure governing apparatus for a prime mover having energy-controlling means, the combination of means for developing fluid under a pressure varying as a function of the speed of the prime mover, mechanism for controlling the energy-controlling means, said mechanism embodying a piston subjected in one direction to the force exerted by a spring and in the opposite direction to the force exerted by the variable fluid pressure, the force exerted by said spring being effective to increase the flow of energy to the prime mover, and means operable upon a predetermined reduction in fluid pressure for stopping the flow of energy to the prime mover.

4. In a fluid-pressure governing apparatus for a prime mover having energy-controlling means, the combination of means for developing fluid under a pressure varying as a function of the speed of the prime mover, mechanism for controlling the energy-controlling means, said mechanism embodying a piston subjected in one direction to the force exerted by a spring and in the opposite direction to the force exerted by the variable fluid pressure, the force exerted by said spring being effective to increase the flow of energy to the prime mover, means operable upon a predetermined reduction in fluid pressure for stopping the flow of energy to the prime mover, and means operable upon a predetermined speed of the prime mover for reducing the fluid pressure to a point below the predetermined minimum.

5. In a fluid-pressure governing apparatus for a prime mover having an admission valve, the combination of means for developing fluid under a pressure varying as a function of the speed of the prime mover, a member operable upon increases in fluid pressure for moving the admission valve in a closing direction and upon decreases in fluid pressure for moving the admission valve in an opening direction, and means operable upon a predetermined minimum fluid pressure for rendering said member ineffective and for closing the admission valve.

6. In a fluid-pressure governing apparatus for a prime mover having an admission valve, the combination of means for developing fluid under a pressure varying as a function of the speed of the prime mover, a member operable upon increases in fluid pressure for moving the admission valve in a closing direction and upon decreases in fluid pressure for moving the admission valve in an opening direction, and means operable upon a predetermined minimum fluid pressure for closing the admission valve, said means being operable independently of the member.

7. In a fluid-pressure governing apparatus for a prime mover having an admission valve, the combination of means for developing fluid under a pressure varying as a function of the speed of the prime mover, a member operable upon increases in fluid pressure for moving the admission valve in a closing direction and upon decreases in fluid pressure for moving the admission valve in an opening direction, means operable upon a predetermined minimum fluid pressure for closing the admission valve, said means being operable independently of the member, and means operable upon a predetermined overspeed of the prime mover for reducing the fluid pressure so as to render said means for closing the admission valve operable.

8. The combination with a prime mover having an admission valve, of a fluid-pressure governing apparatus arranged to move the admission valve in a closing direction upon increases in fluid pressure and in an opening direction upon decreases in fluid pressure, and to positively close the admission valve upon a predetermined minimum fluid pressure, means for developing fluid under pressure varying as a function of the speed of the prime mover, for actuating the governing apparatus, and means operable upon a predetermined overspeed of the prime mover for diverting the fluid under pressure away from the governing apparatus.

9. The combination with a prime mover having an admission valve, of a fluid pressure governing apparatus arranged to move the admission valve in a closing direction upon increases in fluid pressure and in an opening direction upon decreases in fluid pressure, and to positively close the admission valve upon a predetermined minimum fluid pressure, means for developing fluid under pressure varying as a function of the speed of the prime mover for actuating the governing apparatus, a conduit leading from the means for developing fluid pressure to the governing apparatus, a by-pass valve disposed within the conduit, said by-pass valve, when closed, permitting the variable fluid pressure to pass to the governing apparatus, and, when open, permitting the variable fluid pressure to pass to the exhaust, releasable means for holding said by-pass valve closed, and automatic tripping means effective upon a predetermined overspeed of the prime mover for releasing said releasable means.

10. In a fluid-pressure governing appara-

tus for a prime mover having energy-controlling means, the combination of means for developing fluid under a pressure varying as a function of the speed of the prime mover, a piston subjected on one side to the variable fluid pressure and on the opposite side to the force exerted by a spring, the force exerted by said spring being effective to vary the flow of energy to the prime mover during normal ranges of the pressure of fluid, a second piston subjected on one side to the variable fluid pressure and on the opposite side to the force exerted by a spring, the force exerted by said spring being effective to decrease the flow of energy to the prime mover upon a predetermined minimum fluid pressure, means associated with the two pistons for rendering effective the force exerted by the second piston at the predetermined minimum fluid pressure.

11. In a fluid-pressure governing apparatus for a prime mover having energy-controlling means, the combination of means for developing fluid under a pressure varying as a function of the speed of the prime mover, a piston subjected on one side to the variable fluid pressure and on the opposite side to the force exerted by a spring, the force exerted by said spring being effective to vary the flow of energy to the prime mover during normal ranges of the pressure of the fluid, a second piston subjected on one side to the variable fluid pressure and on the opposite side to the force exerted by a spring, the force exerted by said spring being effective to decrease the flow of energy to the prime mover upon a predetermined minimum fluid pressure, and means coacting with the two pistons for rendering effective the force exerted by the second piston at the predetermined minimum fluid pressure.

12. In a fluid-pressure governing apparatus for a prime mover having energy-controlling means, the combination of means for developing fluid under a pressure varying as a function of the speed of the prime mover, a piston subjected on one side to the variable fluid pressure and on the opposite side to the force exerted by a spring, the force exerted by said spring being effective to vary the flow of energy to the prime mover during normal ranges of the pressure of the fluid, a second piston subjected on one side to the variable fluid pressure and on the opposite side to the force exerted by a spring, the force exerted by said spring being effective to decrease the flow of energy to the prime mover upon a predetermined minimum fluid pressure, means coacting with the two pistons for rendering effective the force exerted by the second piston at the predetermined minimum fluid pressure, and means operable upon a predetermined speed of the prime mover for reducing the fluid pressure.

13. In a governing apparatus for a prime mover, the combination of an admission valve for controlling the flow of energy thereto, a fluid reservoir, a pump for developing fluid pressure varying as a function of the speed of the prime mover, a pair of cylinders, each having an operating piston disposed therein, said pistons being subjected on one side to the variable fluid pressure, respectively, biasing means associated with each of said pistons and opposing the force exerted by the variable fluid pressure, said pistons and said biasing means being so arranged that one of said pistons is actuated by a lesser fluid pressure than the other, means coacting with the two pistons and the admission valve whereby the admission valve is held on its seat until the piston adapted to be actuated by the lesser fluid pressure is moved, and thereupon is controlled by the piston requiring a greater fluid pressure for its actuation.

14. In a governing apparatus for a prime mover, the combination of an admission valve for controlling the flow of energy thereto, a fluid reservoir, a pump for developing fluid pressure varying as a function of the speed of the prime mover, a cylinder having an operating piston disposed therein, said piston being subjected on one side to the variable fluid pressure and on the opposite side to the force exerted by a spring, the force exerted by the variable fluid pressure during normal ranges thereof being effective to overcome the force exerted by the spring and to move the piston to its extreme limit of travel and hold it there, a second cylinder having a second operating piston disposed therein, said second operating piston being subjected on one side to the variable fluid pressure and on the other side to the force exerted by a spring, the force exerted by the spring acting against said second operating piston being effective when the first mentioned piston is at its extreme limit of travel to vary the movement of said second piston when subjected to the variable fluid pressure, a lever for controlling the movements of the admission valve, a link connecting the first mentioned piston to the lever and being so arranged that when the first mentioned piston is held at its extreme limit of travel by the variable fluid pressure the admission valve may be opened and when moved in the opposite direction by the spring the admission valve is closed, a link connecting the second operating piston to the lever and being so arranged that when said first mentioned operating piston is held at its extreme limit of travel the force exerted by the variable fluid pressure the movements of said second operating piston are transmitted to the admission valve, a conduit for the variable fluid pressure leading from the pump to the two cylinders, a

by-pass valve disposed within the conduit, said by-pass valve when closed permitting the variable fluid pressure to pass to the two cylinders and when open permitting the variable fluid pressure to pass to the exhaust, releasable means for holding said by-pass valve closed, and automatic tripping means effective upon a predetermined overspeed of the prime mover for releasing said releasable means.

In testimony whereof, I have hereunto subscribed my name this ninth day of July 1924.

HENRY R. TROTTER.