Jan. 13, 1959 L. P. DOUGHERTY 2,868,452

ADDRESS PLATE SENSING DEVICE

Filed Oct. 24, 1957 2 Sheets-Sheet 1

Fig. 1.

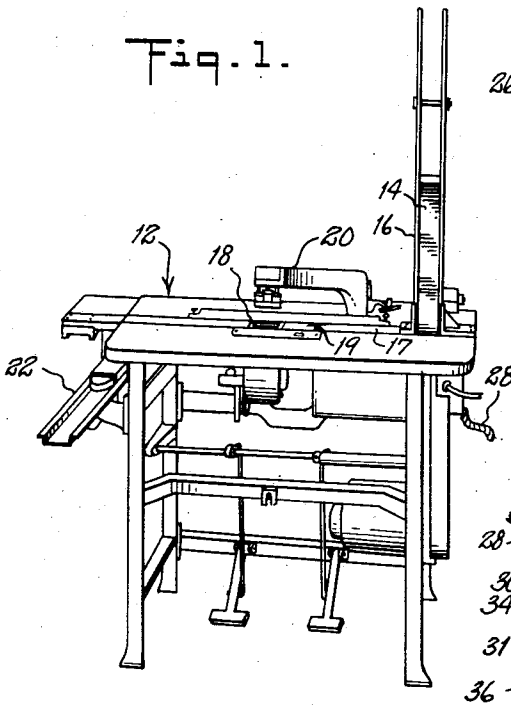

Fig. 2.

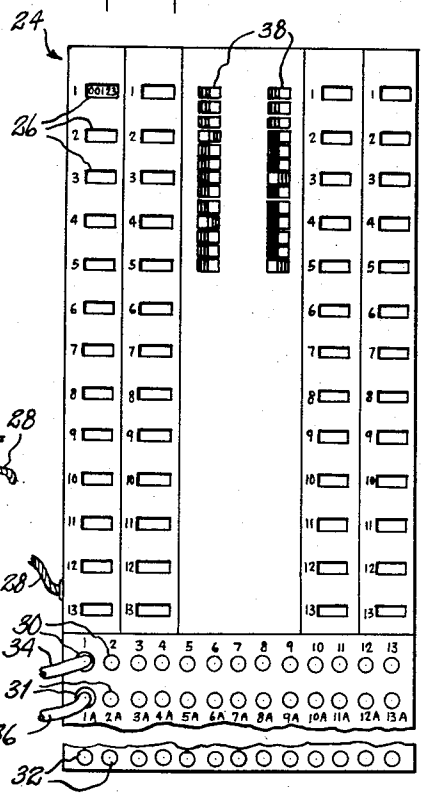

Fig. 3.

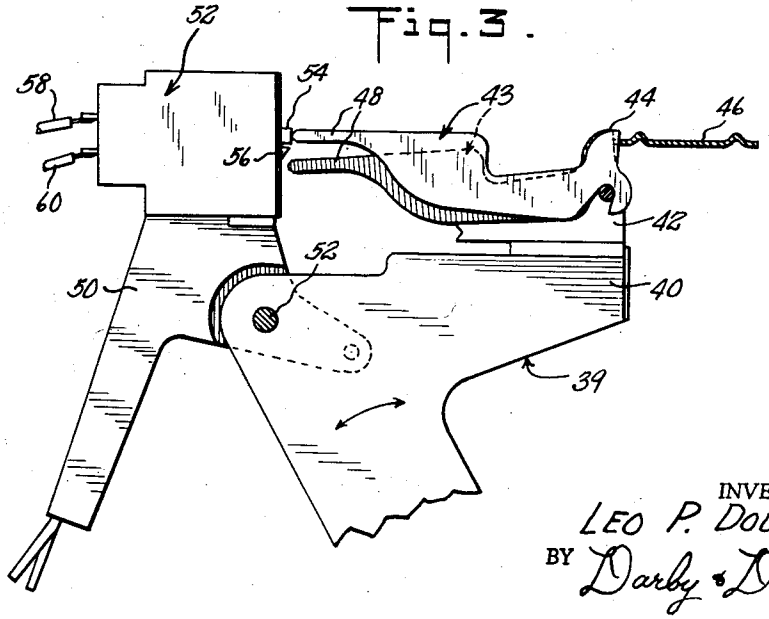

INVENTOR.
LEO P. DOUGHERTY
BY Darby & Darby
ATTORNEYS

Jan. 13, 1959 L. P. DOUGHERTY 2,868,452

ADDRESS PLATE SENSING DEVICE

Filed Oct. 24, 1957 2 Sheets-Sheet 2

Fig. 4.

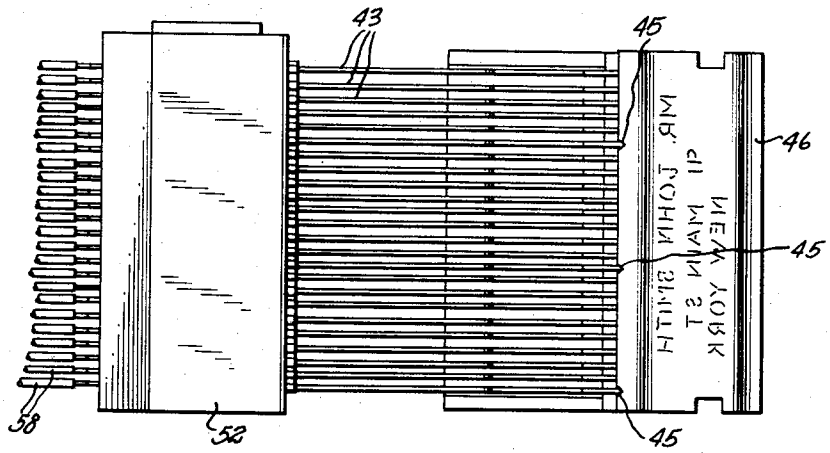

Fig. 5.

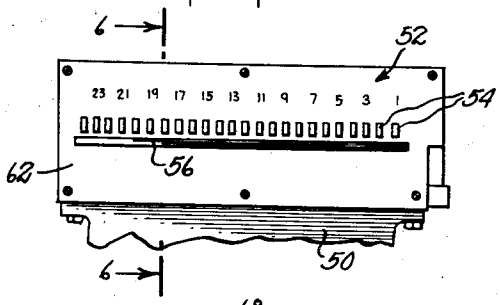

Fig. 8.

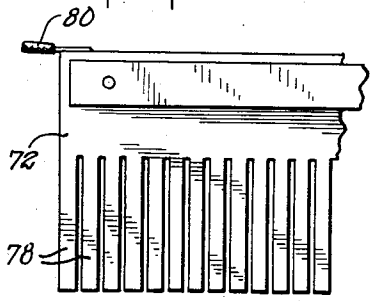

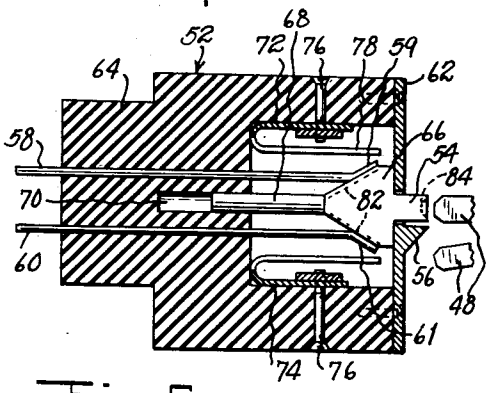

Fig. 6.

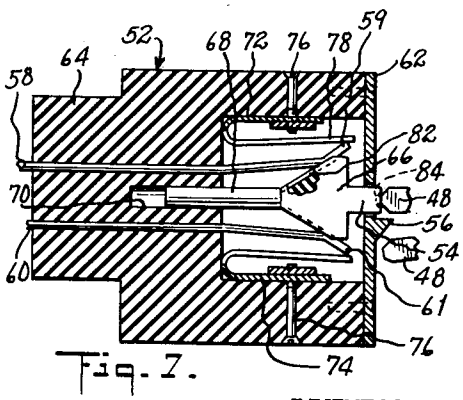

Fig. 7.

INVENTOR.
LEO P. DOUGHERTY
BY Darby & Darby
ATTORNEYS

United States Patent Office 2,868,452 Patented Jan. 13, 1959

2,868,452

ADDRESS PLATE SENSING DEVICE

Leo P. Dougherty, New York, N. Y.

Application October 24, 1957, Serial No. 692,158

7 Claims. (Cl. 235—61.11)

The present invention relates to machines for processing and utilizing address plates, and more particularly for improved electrical apparatus for sensing notches placed in the edges of such plates to record information relating thereto.

Address plates and address printing machines are extensively used in commercial operations where is it necessary to mail articles from time to time to a large list of addresses. Typical among such operations are the mailing of magazines, advertising material and the like.

A typical address plate is formed of metal and has embossed thereon the name and address of a particular individual such as a magazine subscriber. These plates are utilized in an automatic or semi-automatic printing machine to print the address embossed on each plate on a separate label, envelope or the like.

In addressing operations such as the foregoing it is desirable to mark the plates with certain information, for example, the expiration date in the case of magazine subscribers. The plates are customarily marked with desired information by cutting notches in one or both of the long edges of the plate. These notches are used to control printing machinery, for example, to skip plates having a notch in a particular location. However, the sensing apparatus utilized in such machines has generally been of a purely mechanical type and thus failed to provide simplicity and flexibility of operation.

It is therefore an object of the present invention to provide a sensing device for an automatic addressing machine (such as the "Addressograph-Speedaumat," Class 2600 machine) which senses the notches in address plates passing through the machine and generates electrical signals corresponding thereto. These electrical signals may be utilized to operate electrical counters, electrical relays, and/or electrical solenoids arranged to control the functions of the printing machine.

It is a further object of the present invention to provide a sensing device which may be attached to a machine such as the "Addressograph-Speedaumat," class 2600, motor driven, ribbon-type printing machine with a minimum of structural modification and without interfering with the normal operation of the machine.

It is a still further object of the present invention to provide an electrical notch sensing device for attachment to an address plate handling device which may be arranged to provide a separate electrical signal over each one of a pair of conductors and having a pair of conductors associated with each of the notch positions (normally 24 in number) provided along the edge of an address plate.

Other objects and advantages will be apparent from a consideration of the following description in conjunction with the appended drawings, in which:

Fig. 1 is a front perspective view of an address printing machine incorporating the present invention;

Fig. 2 is a front plan view of a tabulator and control board adapted to be used in conjunction with a sensing device according to the present invention;

Fig. 3 is a side elevational fragmentary view, partially in section, of a portion of sensing apparatus to be utilized in address plate handling machines such as the "Addressograph-Speedaumat," Class 2600 machine;

Fig. 4 is a top plan fragmentary view of the sensing apparatus of Fig. 3;

Fig. 5 is a front plan view of an electrical sensing head according to the present invention adapted to be utilized in conjunction with the sensing apparatus of Figs. 3 and 4;

Fig. 6 is a vertical sectional view of the electrical sensing head of Fig. 5 taken along the line 6—6 in Fig. 5;

Fig. 7 is a vertical sectional view of the electrical sensing head of Fig. 5 showing the switch structure at one notch position in the operated position; and

Fig. 8 is a flat-form view of the contact strips shown in Figs. 6 and 7.

Referring now to the drawings and particularly to Fig. 1, a motor driven ribbon-type address printing machine is shown which may be adapted to incorporate electrical address plate sensing apparatus according to the present invention.

For the purpose of illustration the present invention is shown adapted for use with an "Addressograph-Speedaumat," Class 2600, addressing machine manufactured by the Addressograph Multigraph Corporation, Cleveland, Ohio. It will be understood however, that the invention could be applied to other similar types of machines.

Address plates **14** are fed into the addressing machine **12** by means of a supply rack **16**. The plates **14** are transported along a channel **17** to a sensing position **19** and from there to a printing position **18**. At the printing position **18** a stamper arm **20** is arranged to stamp a label, envelope or the like placed over the printing position **18** whereby an ink impression of the address on an address plate is transferred to an envelope or the like through the medium of an inked ribbon (not shown). From the printing position **18** plates **14** proceed along the channel **17** to a discharge tray **22** where they are collected to be returned to storage.

Such printing machines are available which have attachments whereby the operation of the printer may be controlled in response to notches cut in the address plates **14**. It is an object of the present invention to provide an improved electrical notch sensing apparatus for such a machine. The improved notch sensing apparatus is located at the sensing position **19** of the address printing machine. Electrical signals corresponding to the notches of each plate passing through the machine are transmitted from the sensing position **19** through an electrical cable **28**.

According to the present invention electrical signals from the sensing position **19** are tabulated and utilized by a tabulator control board **24** shown in Fig. 2. The signals from the sensing position **19** of the address printing machine are fed to the control board **24** by means of electrical cable **28**.

A number of electrical pulse counters **26** are arranged on the control board and are uitlized for tabulating the notches at various positions in the address plates. Although the counters may be arranged in any desired fashion, a typical arrangement is shown suitable for processing of magazine mailing lists, for example. Four rows of counters are provided, each having 13 counters. The first 12 counters may be associated with the months of a particular year while the thirteenth counter gives a total of magazines expiring in all months of the particular year. A complete tabulation over a four-year period could thus be provided.

Various systems may be utilized to record the months and years by means of notches in the edge of respective address plates. A typical arrangement might provide a notch in one of the first 12 positions along the plate in accordance with the particular month which it was desired to record. The thirteenth and following notches might be utilized to record the years (the number of positions for different years depending upon the maximum length of

subscription). In such an arrangement each plate would have two notches, one in the first 12 positions denoting a particular month and one in the following positions denoting a particular year.

At the bottom of the control board **24** there are provided a number of rows of jacks **30**, **31** and **32**. Certain of the jacks, for example **30** and **31**, are connected directly or through relay circuits to the counters **26**. Others of the jacks for example **32** may be connected to receive the sensing pulses through the electrical cable **28** from the sensing position **19** of the address printing machine.

Patch cords as illustrated at **34** and **36** are provided to connect the electrical leads of the electrical cable **28** in any desired fashion to the counters **26**, thus providing practically unlimited flexibility in tabulating the information recorded by means of notches in the address plates.

In the multi-conductor electrical cable **28** leads may also be supplied from the control board **24** back to the address printing machine **12**, whereby the function of the machine may be controlled by means of solenoids or the like in response to the notches in the address plate being sensed at the sensing position **19**.

Switches **38** are provided to control functions of the address printing machine such as printing or skipping plates in response to the notches in plates as sensed at the sensing position **19**.

The notch sensing apparatus of the address printing machine **12** is shown in Figs. 3 and 4. A sensing unit **39** is located at the sensing position **19** on the address printing machine shown in Fig. 1. Sensing unit **39** is arranged so that it is adjacent the plate channel **17**. The position of an address plate being sensed by the sensing unit **39** is indicated by the plate **46** shown in Fig. 3. The plate transport mechanism has been eliminated for simplicity.

The sensing unit **39** comprises a rocker arm **40** which is pivotally mounted to move toward and away from the address plate **46** located at the sensing position **19**. The mechanical drive for the sensing unit is not shown as it does not form a part of the present invention, nor does the transport mechanism require any modification when the present invention is applied to the standard address printing machine.

A frame **42** is rigidly mounted on the rocker arm **40** and a number of fingers **43** are pivotally mounted in the frame **42**. Each of the fingers **43** has a feeler section **44** extending upward at the forward end thereof adapted to extend into standard address plate notches cut into the edge of an address plate **46**. At the opposite end of each finger **43** there is a probe portion **48**. The fingers **43** are urged by resilient means (not shown) to an upward position.

A support member **50** is pivotally attached by means of a pin **52** to the rocker arm **40**; the support member **50** has rigidly secured thereto a sensing head **52**. The sensing head **52** has a series of buttons **54** protruding from its front face, and below the buttons **54** there is a guard strip **56**.

As an address plate is moved into the sensing position **19** the rocker arm **40** is tilted rearward (to the left in Fig. 3) so that the fingers **43** do not interfere with the passage of an address plate **46** into the sensing position. When the plate is to be sensed the rocker arm **40** is tilted forward (to the right in Fig. 3) so that the feeler section **44** of the fingers **43** are pressed against respective notch positions of the address plate as shown in Fig. 4.

At the positions where there is no notch cut in the plate the address plate bears against the feeler section **44** of a particular finger and causes the finger to be depressed so that the probe **48** of that finger is pressed down to a position below the guard strip **56** on the sensing head **52** as shown in Fig. 3.

At those positions where notches exist in the address plate the feeler section **44** of the associated finger **43** will fall into the notch and will thus not be depressed. Accordingly, that particular finger will not have its probe portion **48** pressed downward below the guard strip **56**, but rather the probe portion **48** will be aligned with the associated button **54** protruding from the sensing head **52**.

After the rocker arm **40** is tilted to bring the fingers **43** to bear against the address plate **46** which is to be sensed, the support member **50** mounted on the rocker arm **40** is pivoted forward (to the right in Fig. 3) to cause all probe portions **48** which are above the guard strip **56** and aligned with buttons **54** to depress their respective buttons. The depression of buttons **54** causes electrical contact to be made between certain of the electrical leads **58** and **60** extending into the rear of the sensing head **52** as will now be explained.

The sensing head **52** is shown in detail in Figs. 6 and 7. It comprises a hollow housing **64**, preferably formed of electrically nonconductive material. A plate **62** is secured to cover the front of the housing. Each button **54** forms a part of a slide member **68** mounted for sliding movement in a hole **70** in the housing **64**. Slide member **68** has an enlarged forward portion **66**. Electrical leads **58** and **60** extend forward in the hollow portion of the housing **64** and have outwardly bent portions **59** and **61** between which the enlarged portion **66** of the slide member **68** is positioned. In the upper portion of the housing **64** a contact strip **72** is mounted and a similar strip **74** is mounted in the lower portion of the housing **64**, these contact strips **72** and **74** being secured within the housing by means of bolts **76**.

The contact strips **72** and **74** are formed in U-shape and are slotted so that a number of resilient teeth **78** extend from the contact strip **74**. The contact strip **72** is shown as it would appear in flat form in Fig. 8. This figure also clearly shows the resilient teeth **78** forming a part of the contact strip **72** and an electrical lead **80** connected to contact strip **72**. Electrical lead **80** is electrically connected to one of the multiple conductors of electrical cable **28**.

From Figs. 6 to 8 it will be seen that as the button **54** of the sensing head **52** is depressed the enlarged portion **66** of the slide member **68** forces apart the electrical conductors **58** and **60** causing them to make contact respectively with contact strips **72** and **74**. The contact strips **72** and **74** being formed with resilient teeth **78** are adapted to yield readily so that the button **54** may be depressed to a considerable degree beyond the point where electrical contact is made. At the same time contact strips **72** being formed with separate resilient teeth **78** allows temporary bending of one of the strips **78** associated with a particular button without causing deforming of the contact strip at nearby buttons. Thus where an address plate has several notches, and even though they happen to fall at adjacent positions, good electrical contact will be made at the contacts **58** and **60** of the sensing head **52** associated with each and every one of the particular notches to be sensed.

The operation of the sensing head is further improved by grooves **82** in the sloping sides of the enlarged portion **66** of the slide member **68**. These grooves tend to guide the end portions **59** and **61** of the conductors **58** and **60** so that they make contact with the proper teeth **78** of the contact strips **72**.

There is also provided in the face of each button **54** a depression **84** so that the end of the probe portion **48** of a finger **43** engages the button **54** which it depresses and does not slide off to one side of the button.

The guard strip **56** on the face of the sensing head **52** prevents fingers which have once been depressed and moved toward the sensing head **52** from thereafter rising above the guard strip **56** to depress their associated buttons **54**. The guard strip **56** is shaped in the form of a ramp which slopes on the lower side so that in the event probe portions **48** of the finger **43** are not fully depressed they will be depressed by the sloping surface of the guard strip **56**.

To recapitulate the operation of the present invention,

when a sensing head has been installed in a notch sensing unit of an address plate handling machine in accordance with the present invention, the operation of the machine causes electrical contacts to be made in the sensing head corresponding to the notches in address plates passed through the machine. Normally two separate voltage sources in the control board **24** will be connected to the contact strips **72** and **74** respectively. Thus for each notch in the address plate which was sensed a complete electrical circuit to operate a relay counter or other device would be provided through the respective electrical conductors **58** and **60** associated with each notch position.

It has been found highly desirable to thus provide a complete two wire circuit for each notch position by arranging that the sensing head in effect close a single throw double pole switch for each notch sensed.

This arrangement simplifies the operation of the control board **24** and also allows a great deal of flexibility in the operation of the device. For example, assuming that a counter **26** requires for operation two connections to respective terminals of a voltage source, these connections may both be supplied from a single notch position. In this case the counter would count all plates having a notch at that position. However, if it were desired to count only plates having notches at both of two designated notch positions this could be accomplished simply by providing one connection from the counter to a terminal of the voltage source through a first notch position contact, and supplying the second necessary connection from the counter to a terminal of the voltage source through a different notch position contact. Thus both notch position contacts would have to be operated before the counter would be actuated, thus producing the desired count of only those address plates notched in both of the designated positions.

The above is only one of many manners in which the apparatus shown may be manipulated to produce tabulations or machine operations having a very high degree of flexibility. The fact that the sensing head incorporates a double pole switch for each notching position is in a large part responsible for this high degree of flexibility.

It should further be noted that although the sensing head constructed according to the present invention is of very simple and easily fabricated construction, its very simplicity of construction provides an inherently high degree of reliability and durability. Furthermore, the parts are arranged in such a manner that wear of the moving parts is minimized and at the same time the arrangement of parts is such that a considerable amount of wear can be tolerated without causing a malfunction of the electrical apparatus. The sensing head is thus well adapted to provide the large number of cycles of operation which will be required in the normal operation of an addressing machine.

Although a particular embodiment of the present invention has been shown by way of illustration it should be understood that many modifications and variations could be made to the illustrated embodiment by a person of ordinary skill in the art without exceeding the scope of the invention. It is accordingly desired that the scope of the invention not be limited by the particular embodiment shown and described, but rather shall be limited solely by the appended claims.

What is claimed is:

1. In a device for sensing the notches in the edge of address plates, said device having a plurality of fingers adapted to be positioned by the presence or absence of notches in said plates; an electrical sensing head comprising a housing, a plurality of pairs of electrical conductors, extending into said housing and forming within said housing pairs of resilient electrical contact members, a movable element of non-conductive material slidably mounted between each said pair of conductors and having an enlarged end bearing against respective ones of its associated pair of conductors and further adapted to move said conductors outwardly upon rearward movement of said element, a button on the front end of said element, a cover plate secured to the front end of said sensing head and having at least one hole therein located to allow said buttons to extend through said cover plate, a contact strip of conductive material mounted along the inside of said housing adjacent the upper ones of said pairs of contact members, a second contact strip of conductive material resiliently mounted along the inside of said housing adjacent the lower ones of said pairs of contact members, said first and second strips each having slots therein located intermediate of said contact members, and means for moving said sensing head into contact with said fingers whereby the ones of said fingers in a predetermined position depress said buttons causing said movable element to bend outwardly said contact members establishing an electrical connection between each contact member of a respective pair and its associated contact strip of conductive material.

2. In a device for sensing the notches in the edge of address plates, said device having a plurality of fingers adapted to be positioned by the presence or absence of notches in said plates; an electrical sensing head comprising a housing of insulating material, a plurality of pairs of electrical conductors extending into the rear of said housing and forming within said housing pairs of resilient electrical contact members having diversely bent forward ends, a hole in said housing intermediate of the conductors of each of said pair of conductors, a movable element of non-conductive material slidably mounted in each of said holes and having an enlarged end bearing against respective ones of its associated pair of conductors and further adapted to bend said conductors outwardly upon rearward movement of said element, a button on the front end of said element, a cover plate secured to close the open end of said sensing head and having at least one hole therein located to allow said buttons to extend through said cover plate, a contact strip of conductive material resiliently mounted along the inside of said housing adjacent the upper ones of said pairs of contact members, a second contact strip of conductive material resiliently mounted along the inside of said housing adjacent the lower ones of said pairs of contact members, said first and second strips each having slots therein located intermediate of said contact members, and means for moving said sensing head into contact with said fingers whereby the ones of said fingers in a predetermined position depress said buttons causing said movable element to bend outwardly said contact members establishing an electrical connection between each contact member of a respective pair and its associated contact strip of conductive material.

3. An electrical sensing head as claimed in claim 2 wherein said buttons are of rectangular cross-section and the holes in said covered plate are rectangular in shape.

4. An electrical sensing head as claimed in claim 2 wherein the enlarged end of said movable element is of V-shape.

5. An electrical sensing head as claimed in claim 4 wherein the diverging sides of said V-shape enlarged end of said movable element are grooved to slidably engage said contact members.

6. An electrical sensing head as claimed in claim 2 wherein the end of said buttons contains a depression to engage the end of said fingers.

7. An electrical sensing head as claimed in claim 2 further including a ramp adjacent to and extending parallel to the line of said buttons, said ramp being adapted to deflect and retain respective ones of said fingers which have been partially deflected from alignment with their respective buttons.

No references cited.