April 7, 1970 G. W. KNECHT 3,505,621

COUPLING FOR TWO-POLE CIRCUIT BREAKER

Filed June 22, 1967 2 Sheets-Sheet 1

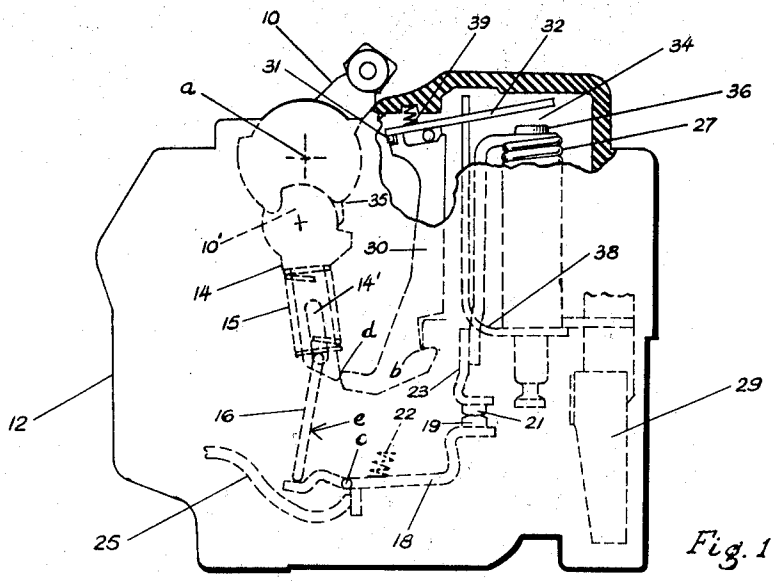

Fig. 1

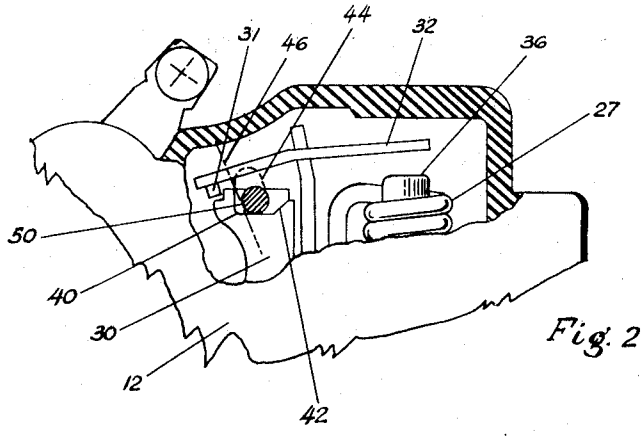

Fig. 2a

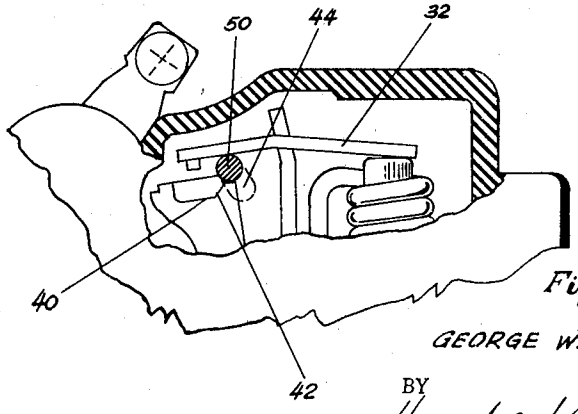

Fig. 2b

INVENTOR.
GEORGE W. KNECHT

BY
Hopgood and Calimafde
ATTORNEYS

April 7, 1970 G. W. KNECHT 3,505,621

COUPLING FOR TWO-POLE CIRCUIT BREAKER

Filed June 22, 1967 2 Sheets-Sheet 2

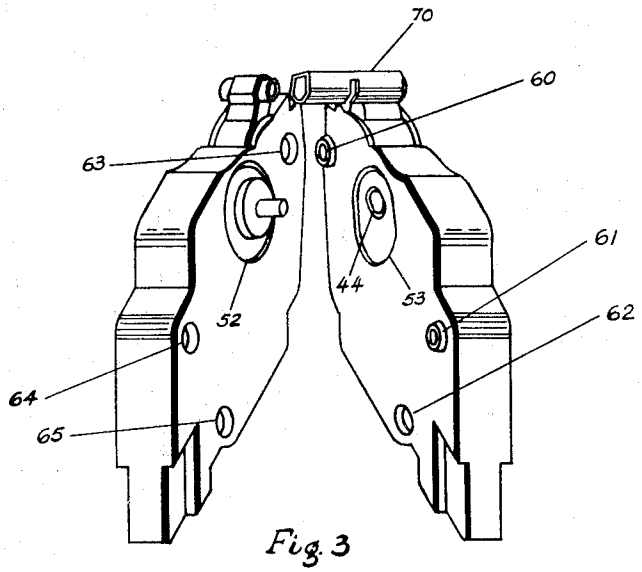

Fig. 3

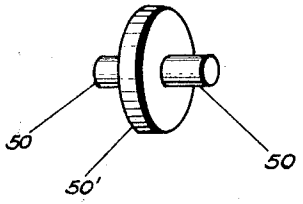

Fig. 4

INVENTOR.
GEORGE W. KNECHT

BY Kapgood and Calimafde
ATTORNEYS

United States Patent Office 3,505,621 Patented Apr. 7, 1970

3,505,621

COUPLING FOR TWO-POLE CIRCUIT BREAKER

George W. Knecht, Brooklyn, N.Y., assignor to Murray Manufacturing Corporation

Filed June 22, 1967, Ser. No. 648,123
Int. Cl. H01h 75/10, 77/06
U.S. Cl. 335—8 3 Claims

ABSTRACT OF THE DISCLOSURE

A two-pole circuit breaker of the type including two single pole breakers of half-inch module design mounted side-by-side and interlocked for two pole operation. The interlocking member is shaped in the form of a cylinder having a central flange, the end cylindrical portions are caused, by means of scissor camming action upon their periphery, to transfer the tripping of one circuit breaker to the other.

BACKGROUND OF THE INVENTION

Circuit breakers provide means for protecting electrical equipment against short and overload conditions, as well as provide a means for controlling the operational status of associated equipment via a manually operable switch. The protection provided by the circuit breaker is automatic; the breaker responding to a predetermined current condition to open the contacts maintaining the line-to-load continuity. Breakers are classified by the manner in which they respond to current. Those which are responsive to the heat effect of current are known as thermal breakers; those which respond to a magnetic flux produced by the current are called electromagnetic breakers, and those which are responsive to both of the foregoing are designated thermal magnetic breakers.

The idea of combining two or more breakers, each of which controls a single line-to-load continuity, for multipole operation is not new. The art has long recognized that it is very often desirable to cause one circuit breaker to trip another upon an overload condition occurring in another breaker.

The requirements for this dependency of the tripping of the breakers, however, often involve diametrically opposed considerations. For example, fully magnetic breakers exhibit extremely small tripping forces when subjected to overload conditions; consequently, the additional force loading for tripping the second breaker is a serious problem. The desirability of maintaining the small size of the breaker leaves little room to provide the additional force needed to compensate for the differences in manufacturing tolerances. The requirement for simple construction and low manufacturing costs must also be considered. Further, the entire modular system should be symmetrical so that tripping may take place in a multiple arrangement without the necessity for any breaker being "left" or "right" handed. In other words, identical surfaces must be presented to a symmetrical tripping member.

Additionally, there must be a complete absence of the coupling's influence in the relatching cycle of the breaker units. That is, upon tripping, the better conventional circuit breakers not only part the contacts, but further throw the handle to "off" to allow visual inspection; simultaneously all the internal components of the circuit breaker are reset so that upon a single throwing of the handle to "on," the contacts are closed. The coupling member must not interfere with this function within either the breaker which has been automatically tripped, or in the breaker which is being dependently tripped.

OBJECTS OF THE INVENTION

Accordingly, it is the object of this invention to provide an interlocking trip arrangement for two pole and multipole circuit breaker operation which satisfies the foregoing considerations.

It is a further object of this invention to provide such interlocking trip arrangement with minimum modification to existent breakers.

BRIEF SUMMARY OF THE INVENTION

The invention is predicated upon the effect of a scissor camming action upon a rolling surface. The rolling surface is provided by a cylindrical interlocking or coupling member which is interposed between the breaker movable armature and the member which it latches. A first camming surface is provided in the latched member and a second in the body of the breaker. These two surfaces provide a scissor-type cam which acts upon the cylindrical coupling member when either breaker trips, thereby effecting the tripping of the other breaker.

The above mentioned and other features and objects of this invention and the manner of attaining them will become more apparent and the invention itself will best be understood by reference to the following description of an embodiment of the invention taken in conjunction with the accompanying drawings, the description of which follows.

DESCRIPTION OF THE DRAWINGS

FIG. 1 illustrates a circuit breaker cut away to reveal the inventive portion thereof; the remaining significant elements are shown in phantom;

FIGS. 2*a* and 2*b* are details of the inventive portions of the circuit breaker in two positions of operation;

FIG. 3 is an exploded perspective of a pair of circuit breakers coupled for two pole operation; and

FIG. 4 is a perspective illustration of the trip coupling member according to the invention.

DETAILED DESCRIPTION OF THE INVENTION

Turning now to the drawings, and in particular to FIG. 1, there may be seen a magnetic circuit breaker such as is generally disclosed in U.S. Patent No. 3,305,806 issued Feb. 21, 1967 to the same assignee. While a detailed analysis of this breaker may be had by reference to the foregoing patent, sufficient particulars shall be set forth below to allow an understanding of the present invention. It is to be understood, however, that the patented breaker is illustrated for purposes of example only and that any conventional breaker may be employed in conjunction with the invention so long as the requisite camming surfaces are available and function relative to the latching mechanism in the manner to be described.

Pivoted manually-operable handle **10** is housed within the breaker casing **12**, and is biased internally counterclockwise. Pivotally mounted upon an extension **10'** of the handle is a toggle link **14**. Toggle link **16** in turn is pivotally coupled to toggle link **14** within a channel **14'** and is urged to the extremity of this channel by spring **15**. The three members thus far described cooperate to form a double toggle assembly having a central energy-storing link (**14**). The only fixed pivot in the toggle assembly is that mounting the handle to the circuit breaker housing at point *a*.

A more detailed analysis of this assembly and its functions during circuit breaker cycling can be had by reference to the above-denoted patent. Suffice to say that the toggle assembly produces several net forces. The first of these forces is a downward force on movable contact member **18** which carries contact **19**. Since this force occurs to the left of pivot *c*, it opposes the bias force

provided by spring **22** and maintains contact **19** in engagement with contact **21**, carried by stationary contact member **23**.

Line-to-load continuity is established through the flexible lead **25**, which is affixed to a wire connector (not shown), movable contact member **18**, stationary contact member **23**, electromagnet coil **27**, and busbar contact **29**.

The second force produced by the toggle assembly is imparted to the trip lever **30** which is pivotally mounted at point *b*. This force is applied counterclockwise at contact point *d* and is produced as a consequence of the sum of the forces on toggle links **14** and **16**. The net forces on the toggle assembly further act to maintain the handle at its clockwise limit; overcoming the internal counterclockwise moment of the handle.

Trip lever **30** is maintained in the position shown and is latched against counterclockwise rotation by lip **31** of movable armature **32**.

Coil **27** generates a magnetomotive force dependent upon the current passing through the circuit breaker. The resultant flux travels a magnetic path which includes air gap **34**, core **36**, side armature or the yoke **38** of movable armature **32** (pivotally mounted upon yoke **38**). Except for the air gap, the circuit is of low reluctance. The force upon the opposing surfaces at the air gap is a function of the coil current.

At overload, which is the existence of predetermined current for a predetermined time, the force is such that the gap is reduced to zero by movement of one end of the movable armature **32** to the core **36**. At the other end, the movable armature delatches trip lever **30** and the force at point *d* now rotates the lever counterclockwise. The rotation of the lever is followed by movement of toggle links **15** and **16** at their junction (hereinafter called "knee") to the right. The movement of the knee to the right causes an intermediate portion of toggle link **16** to strike an abutment in the molding at point *e* resulting in the bottom of this link moving to the left and sliding off contact member **18**. Contacts **19** and **21** thereupon snap open by virtue of the force imparted by spring **22**. There are now no forces acting upon the toggle assembly other than the internal bias acting upon handle **10** and urging it counterclockwise.

The handle bias serves the reset function by rotating the whole toggle assembly to the right. Rotation of the lower portion of the handle link, generally denoted at **35**, to the right causes it to engage trip lever **30** at the juxtaposed arcuate section and return it to the right. Spring **39** on the movable armature biases this armature to the latch position when the end of the trip lever clears lip **31**.

The circuit breaker has now been reset but is not on. Return of the circuit breaker to the "on" condition is performed by rotating the handle back to the position shown in FIG. 1. The foregoing is deemed sufficient for an understanding of the invention and the modification necessary to intercouple the circuit breakers for multipole operation. A more detailed analysis of the various functions may be had by reference to the patent.

Turning now to FIGS. 2*a* and 2*b*, the inventive details will now be described. In these figures, as well as in FIGS. 3 and 4, common elements will bear similar reference numerals. As may be seen from the figures, trip lever **30** includes a recess indicated generally at **40**, having a camming surface **42**. While this surface is shown as broken into two angled linear portions, it may also be a continuous curve. The former, however, is preferred since it places less load on the system. While not shown in the figures, trip lever **30** is symmetrical and a mirror image recess appears on the back side of the lever arm for right or left placement of each circuit breaker with respect to its pole partner. Riding in recess **40** between camming surface **42** and movable armature **32** is trip coupling member **50**, shown in section. A perspective view of this member may be seen in FIG. 4.

Dashed line **44** describes an aperture in the housing **12** for defining and describing the motion of the trip coupling member **50** upon movement of the trip lever **30** as follows.

Upon an overcurrent condition, air gap **36** is traversed by movable armature **32** and trip lever **30**, as described, is released and moves counterclockwise under force of the toggle assembly. As a consequence of this motion (see both FIGS. 2*a* and 2*b*) trip coupling **50** rides up camming surface **42** under the scissor action between this moving camming surface and the stationary surface portion **46** of aperture **44**. Preferably portion **46** is angled generally normal to the armature **32** for greatest lift.

FIG. 2*b* shows the final position. Trip coupling member **50** is at the upper portion of the opening **44**. At this juncture, it bears mentioning that trip coupling member **50** will, by virtue of its cylindrical periphery, tend to rotate and minimize the friction upon the surfaces which it contacts during its displacement.

The upward motion of the trip coupling member **50** will cause its extension disposed similarly in a neighboring breaker to contact the underside of movable armature **32** lifting it upwardly and unlatching the trip lever of this breaker; allowing the toggle assembly to release the contacts of the coupled breaker similarly to the action of the "Master" breaker. Upon reset, trip lever **30** moves to the right allowing trip coupling member **50** to drop back into the recess.

FIG. 3 is an exploded perspective showing the disposition of the trip coupling member between adjacent breakers. In this figure, the breaker opening **44** may be plainly seen in the right breaker. A similar opening appears in the left brefaker. In order to prevent skewing of the trip coupling member, a disc-shaped central portion **50'** (see FIG. 4) is included. This portion rides in housing recesses **52** and **53**, which serve the function of guiding the central disc **50'** of the trip coupling member and permitting the disc to electrically seal the breaker units from one another. That is, disc **50'** serves as an insulating spacer regardless of its position. Breaker holes **60** through **65** in the respective breaker casings permit the passage of rivets or bolting members (not shown) to permanently join the breakers for related operation.

A handle coupler **70** is provided to tie the respective breaker handles together. This is neecssary for manual operation. When handles are put "ON" or "OFF", both breaker mechanisms must operate in synchronization so contacts make or break simultaneously. A condition of one pole "ON" and the other "OFF" should not exist.

Trip member **50** may be a machine turned or molded member made of insulating material with high dielectric strength (since as mentioned, it electrically spaces the live parts of joined poles). Only minimal mechanical strength is necessary because the forces involved are small. Exemplary materials for such a coupling member are gray fiber or molded nylon.

The foregoing description is applicable to not only two pole cooperation, but any gang or multipole operation where the coupling member of FIG. 4 is iteratively applied between adjacent breakers. This result is attained as a consequence of all members related to the intercoupling function being symmetrical. Trip lever **30** has identical camming surfaces; trip coupling member **50** is symmetrical; recesses **52** and **53** appear on both sides of the breaker and are symmetrical, and so on.

While the principles of the invention have been described in connection with specific apparatus, it is to be clearly understood that this description is made only by way of example and not as a limitation to the scope of the invention as set forth in the objects thereof and in the accompanying claims.

What is claimed is:

1. In an electric circuit protection arrangement of the type including individually encased breakers, each having

a pivoted manually operable handle, a pair of complementary contact members maintained in contact, a trip lever biased in a direction for releasing said contacts; an armature responsive to current through the breaker and normally latching said trip lever in a position removed from the contact releasing position, the improvement for combining a pair of juxtaposed breakers for two pole operation comprising on each breaker similar camming surfaces on a trip lever portion adjacent a portion of said armature, said camming surface being at an angle of less than 90° with respect to the direction of motion of said trip lever when moving to the contact releasing position; a trip coupling member extending between adjacent breakers and having cylindrical portions respectively interposed between each camming surface and trip lever portion of each breaker; and a common stationary camming surface intermediate said breaker trip levers, said camming surface in combination with each of said trip lever camming surfaces producing a linear thrust on said trip member substantially perpendicular to the direction of motion of said trip lever upon the overcurrent actuation of either armature for lifting the other armature.

2. The circuit breaker arrangement claimed in claim 1 wherein the stationary camming surface comprises an oblong opening in at least one breaker casing wall.

3. The circuit breaker arrangement claimed in claim 1 wherein said trip member comprises a cylindrical member having a flanged disc portion between its ends, said flanged portion riding a recess between coupled breakers for preventing axial twist of said trip member and for simultaneous sealing the opening between breakers.

References Cited

UNITED STATES PATENTS

2,977,444	3/1961	Middendorf	200—116.13
3,116,387	12/1963	Middendorf	200—116.13
3,193,646	7/1965	Krebs	335—160

GEORGE HARRIS, Primary Examiner

HAROLD BROOME, Assistant Examiner

U.S. Cl. X.R.

335—160