United States Patent

[11] 3,603,216

[72] Inventor George R. Johnson
Chagrin Falls, Ohio

[21] Appl. No. 9,627
[22] Filed Feb. 9, 1970
Division of Ser. No. 703,588, Feb. 7, 1968, Pat. No. 3,509,798
[45] Patented Sept. 7, 1971
[73] Assignee The Arpax Company
Chagrin Falls, Ohio

[54] **METHOD FOR PRODUCING CUSHIONING DUNNAGE**
4 Claims, 9 Drawing Figs.

[52] **U.S. Cl.** ..... **93/1 WZ,** 93/1 G, 93/1.1, 93/1.5, 93/8 W, 93/84 TW, 93/93 HT
[51] **Int. Cl.** **B31f 1/10,** B31d 5/02, B31c 13/00
[50] **Field of Search** ..... 93/1, 1.1, 1.5, 8 W, 84 TW, 93 HT; 156/183

[56] **References Cited**

UNITED STATES PATENTS

2,106,246	1/1938	Fourness	93/1 WZ
2,499,463	3/1950	Crary	93/1 WZ
2,679,887	6/1954	Doyle	156/183
2,882,802	4/1959	Walker	93/1 WZ
2,786,399	3/1951	Mason	93/1 WZ
2,924,154	2/1960	Russell	93/1 WZ
3,012,923	12/1961	Slayter	156/183 X
3,164,069	1/1965	Wilkie	93/1 WZ
3,255,064	6/1966	Makansi	156/183 X
3,276,937	10/1966	Kim	93/1 WZ
3,383,449	5/1968	Muller	264/287
3,418,890	12/1968	Tachibana	93/1 WZ
3,522,130	7/1970	Lundquist	156/383

Primary Examiner—Wayne A. Morse, Jr.
Attorney—Baldwin, Egan, Walling & Fetzer

ABSTRACT: A method of producing resilient cushioning dunnage comprising taking at least one web of sheetlike material, such as paper, of predetermined width, rolling the lateral edges of the web generally inwardly, generally loosely crumpling the web with the rolled edges radially inwardly into a padlike configuration and then connecting together the confronting rolled lateral edge portions to maintain the dunnage article in its formed configuration.

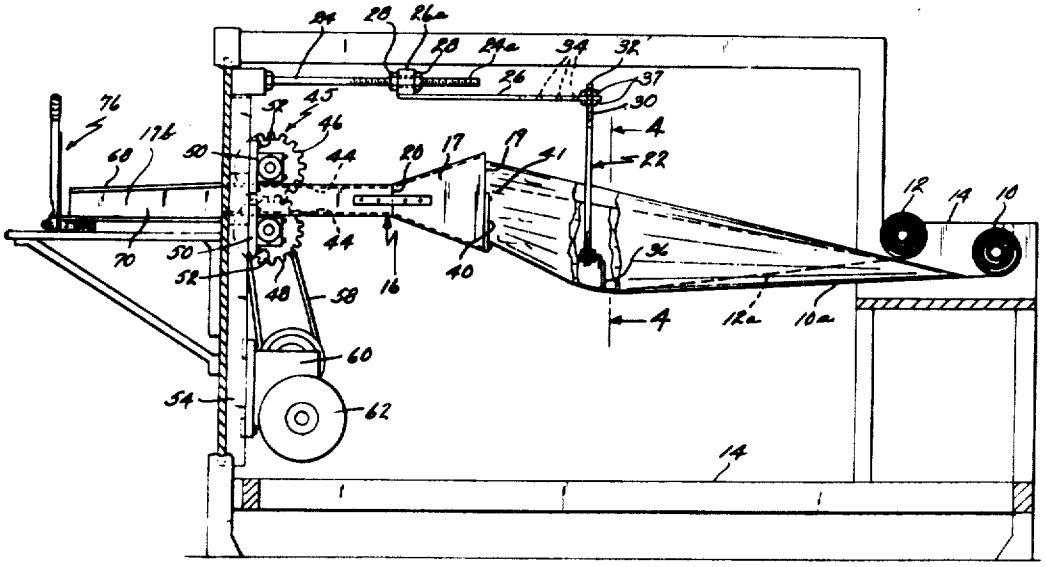

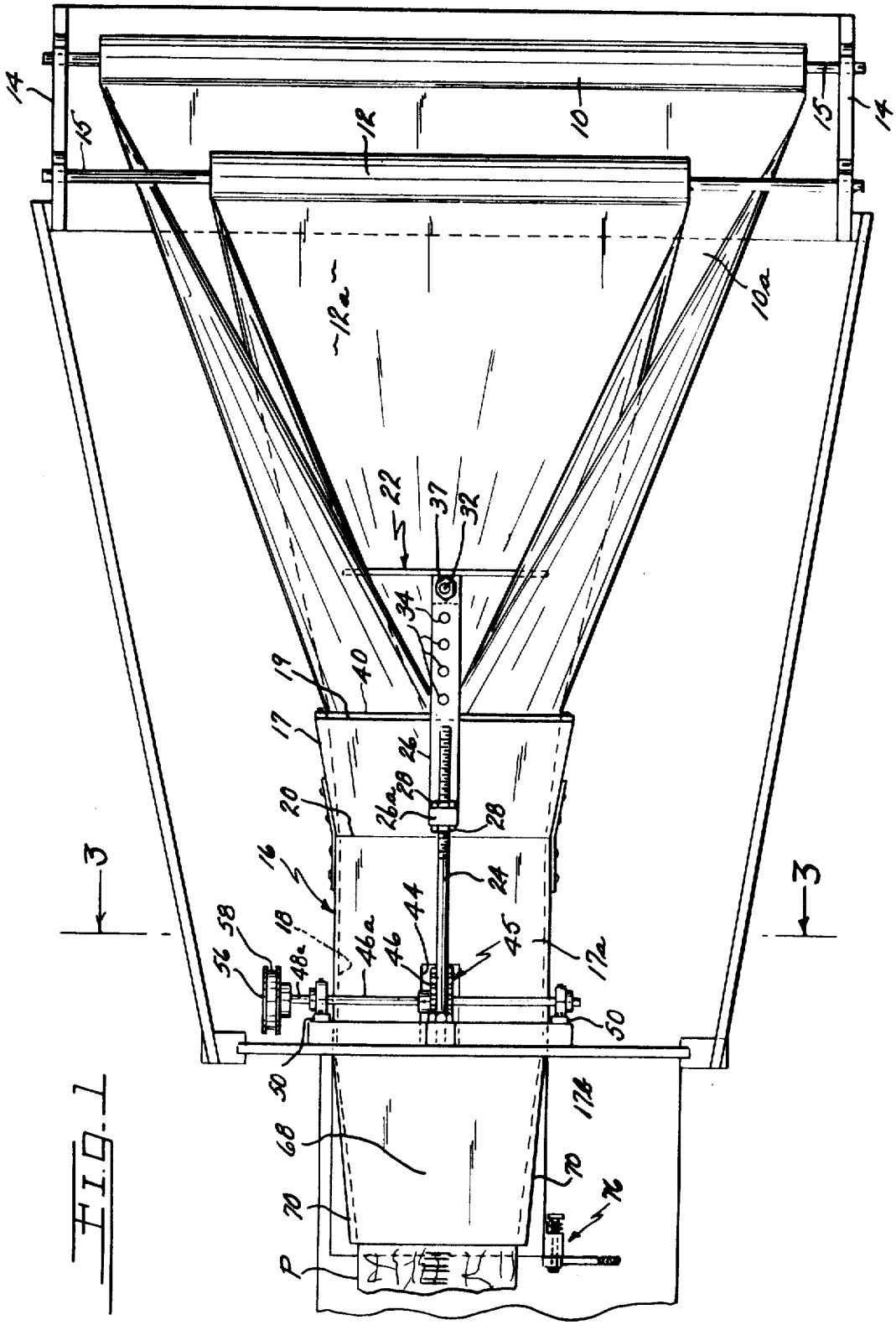
14
15
12
10
12a
10a
22
37
32
34
19
40
17
26
26a
20
28
16
24
3
18
44
58
56
48a
46a
46
45
17a
50
50
17b
68
70
76
P

FIG. 1

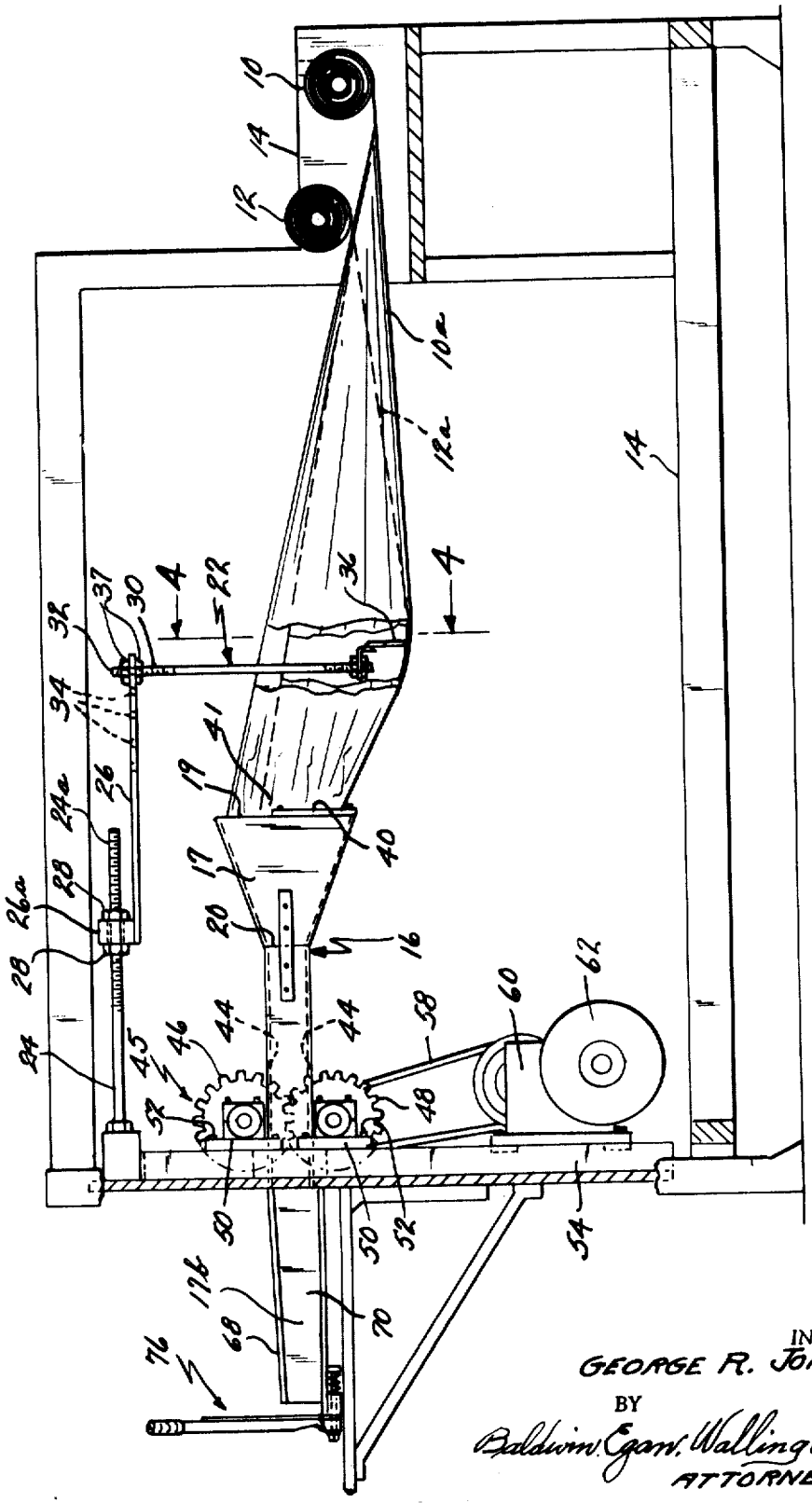

FIG. 2

INVENTOR.
GEORGE R. JOHNSON
BY
Baldwin, Egan, Walling & Fetzer
ATTORNEYS

FIG. 3

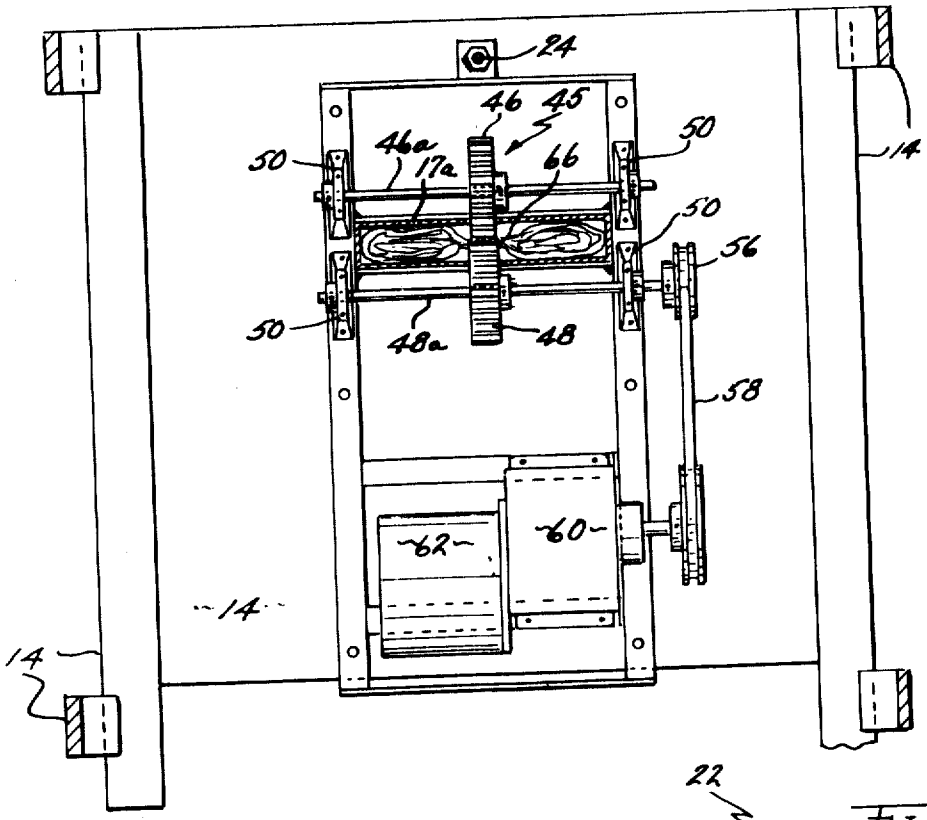

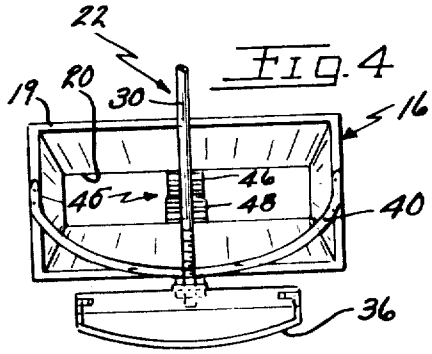

FIG. 4

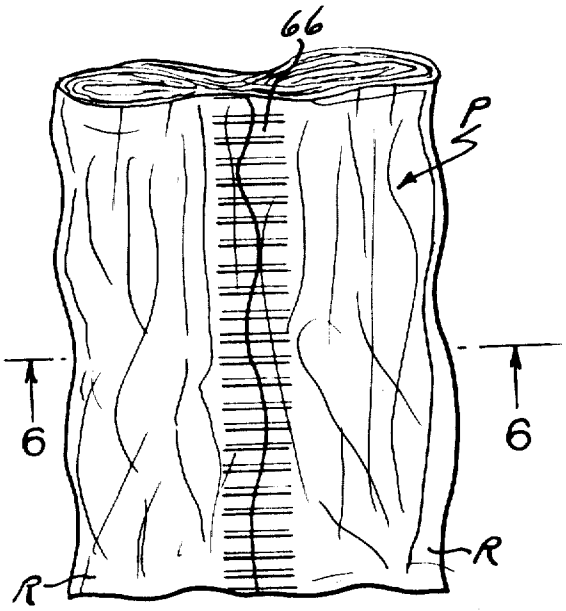

FIG. 5

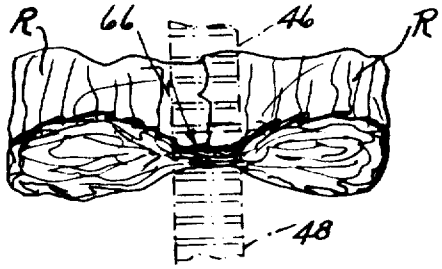

FIG. 6

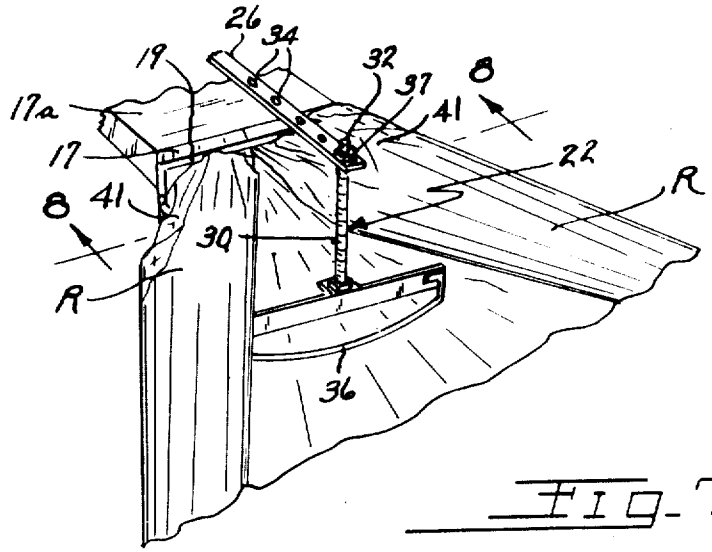

FIG. 7

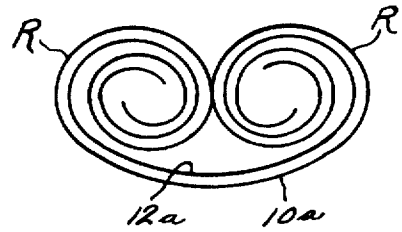

FIG. 8

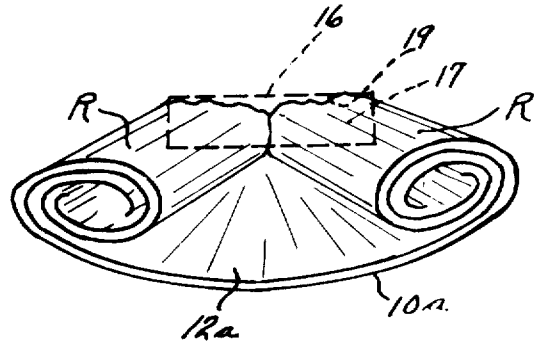

FIG. 9

INVENTOR.
GEORGE R. JOHNSON
BY
Baldwin, Egan, Walling & Fetzer
ATTORNEYS

METHOD FOR PRODUCING CUSHIONING DUNNAGE

This is a divisional application of my copending U.S. Pat. application Ser. No. 703,588, filed Feb. 7, 1968 now Pat. No. 3,509,798, issued May 5, 1970, by George R. Johnson and entitled "MECHANISM AND METHOD FOR PRODUCING CUSHIONING DUNNAGE."

This invention relates in general to methods for producing a packing material or cushioning dunnage as it is known in the art, and more particularly, dunnage-producing methods embodying procedures for converting a continuous web of sheetlike material, such as paper, into a generally continuous, resilient, padlike dunnage product for use in packing and cushioning articles or products in shipping containers and the like. The padlike dunnage product has a relatively low density per unit volume and possesses good cushioning characteristics.

BACKGROUND OF THE INVENTION

Various mechanisms and methods are known in the art for producing lengths of packing material for use in packing breakable items in enclosing containers. One such mechanism is disclosed in U.S. Pat. No. 2,882,802, issued Apr. 21, 1959 to Charles Robert Walker and entitled "CRUMPLING DEVICE." However, such prior art mechanisms and methods are either too complex for the quality of dunnage produced, or they do not produce dunnage for packing material which has suitable resiliency for giving good cushioning protection to articles disposed in shipping containers. Accordingly, the general practice has been to crumple paper material manually, with the packers crumpling the material and placing it into the containers as needed. The latter method is inefficient and time consuming. Various other types of dunnage, such as for instance plastic dunnage, are known in the art, but these other types generally either require too much storage space or are too expensive for universal use. Various dunnage producing mechanisms and methods are also disclosed in applicant's copending U.S. Pat. application, Ser. No. 640,145, filed May 22, 1967.

SUMMARY OF THE INVENTION

The present invention provides a novel method for effectively and efficiently producing paper dunnage, the latter having considerable resiliency for greatly improving the cushioning characteristics of the packing material or dunnage. The cushioning dunnage produced is of a padlike configuration having good resiliency and relatively low density per unit volume. The user is able to convert paper from rolls having densities of, for instance, 40 to 50 pounds per cubic foot requiring relatively little storage space, into cushioning dunnage having densities of, for instance, from 1 to 2 pounds per cubic foot and as needed for direct and easily handled placement into packages at a packaging station.

Accordingly an object of the invention is to provide a novel method for producing dunnage or packing material.

A further object is to provide a method of the latter type which utilizes at least one web of sheetlike material, such as paper, and forms such web of material into a padlike cushioning dunnage product of relatively low density per unit volume.

A further object of the invention is to provide a method of producing cushioning dunnage from sheet or weblike material in which the lateral edge portions of the sheetlike material are urged into generally spiral or rolled form and then the sheetlike material is drawn generally horizontally through a crumpler section of a dunnage-producing mechanism and as by means of meshed gears, which grip the crumpled rolled edged sheet of material generally centrally thereof, and stitch the rolled edge portions of such sheet material together to provide a unitary, readily handled padlike cushioning dunnage product.

A further object of the invention is to provide a novel method for producing a resilient, cushioning dunnage product of generally padlike configuration comprising rolling the edges of sheetlike material inwardly to form generally spiral portions and compressing the rolled edged sheetlike material inwardly into a generally padlike configuration and then connecting together the abutting, generally centrally disposed mating areas of the crumpled pad to maintain the padlike configuration, while preserving the resilient characteristics of the crumpled sheetlike material.

A still further object of the invention is to provide a novel method of producing a dunnage product of padlike configuration wherein such product has a relatively low density per unit volume with connecting or securing means extending lengthwise of the pad.

A still further object of the invention is to provide a method of the above-described type utilizing a plurality of sheets of paper stock material to form the dunnage product.

Other objects and advantages of the invention will be apparent from the following description taken in conjunction with the accompanying drawings wherein:

BRIEF DESCRIPTION OF DRAWINGS

FIG. 1 is a generally diagrammatic, top plan view of a mechanism operable for carrying out the method of the invention;

FIG. 2 is a side-elevational view of the mechanism illustrated in FIG. 1;

FIG. 3 is a sectional view taken generally along the plane of the line 3—3 of FIGURE 1 looking in the direction of the arrows;

FIG. 4 is a fragmentary view taken generally along the plane of 4—4 of FIG. 2 looking in the direction of the arrows, and illustrating the pusher means which aids in rolling the edges of the sheetlike stock material into spirallike configuration prior to movement of the rolled-edged stock into the crumpling section of the mechanism;

FIG. 5 is a fragmentary generally diagrammatic top plan view of the cushioning dunnage product produced by the mechanism;

FIG. 6 is a sectional view taken generally along the plane of line 6—6 of FIG. 5 looking in the direction of the arrows;

FIG. 7 is a fragmentary, perspective view illustrating the rolling of the edges of the sheetlike stock material above the pusher;

FIG. 8 is a diagrammatic end-elevational illustration of the generally spirally rolled sheet material just after it has passed the pusher means of FIG. 7;

FIG. 9 is a diagrammatic generally end-elevational, fragmentary illustration of the superimposed webs of sheetlike material with their lateral edges rolled into generally spiral form, converging into the crumpler section of the mechanism for producing the padlike construction of dunnage product.

Referring now again to the drawings, there is illustrated a plurality of rolls **10** and **12** of sheetlike or weblike material, rotatably mounted on a support **14**, for feeding of the sheetlike material lengthwise of the dunnage-producing machine. The sheetlike material may be of any suitable type, with paper, such as 30 pound Kraft paper, having been found to be satisfactory. However, it will be understood that other types of papers and other sheetlike materials may also be satisfactory, the Kraft paper having been found to provide a particularly expeditious type of cushioning dunnage product.

As can be seen, the inner roll **12** may be of a lesser width than the outer roll **10** and with the axis of the outer roll **10** being preferably disposed below the axis of the inner roll **12**. The rolls **10** and **12** are preferably not freely rotatable on the support **14**, but are preferably frictionally resisted in their rotation such as by means of a relatively close fitting condition between the rolls **10** and **12** and their respective spindles **15**, to prevent "overrunning" of the rolls during operation of the mechanism.

The dunnage-producing machine comprises a crumpler section **16** into which the superimposed webs **10*a*** and **12*a*** of

sheetlike material are drawn, with such crumpler section comprising a funnellike portion 17, a central reducing portion 17*a*, and a distal end compressing portion 17*b*, defining a continuous passageway 18 therethrough. Funnellike portion 17 comprises a widened mouth 19 which slopes inwardly to a narrowed throat 20, so that the webs of sheetlike material are compressed radially inwardly, or crumpled inwardly into an irregular randomlike pattern, resulting in a generally rectangular-shape padlike configuration as they pass through portion 17 into the throat 20.

The lateral edges of the webs 10*a* and 12*a* are rolled inwardly as they commence to leave the respective roll of material, with such edges being rolled into superimposed spirallike relationship, and with such spirally rolled edges being disposed in generally confronting, practically abutting condition as they move into the mouth 19 of funnellike portion 17 of the crumpler section. In this connection there is provided a pusher mechanism 22 positioned upstream from mouth 19 of crumpler portion 17, for pushing downwardly on the webs of material and thus urging the lateral edges of the webs into rolled form as the webs are drawn into the crumpler section.

Pusher mechanism 22 is preferably adjustably mounted on the machine so that it may be moved longitudinally of the crumpler section 16 for adjusting the position of the pusher with respect to the mouth 19. In this connection, mechanism 22 may comprise a generally horizontally projecting supporting rod 24 suitably threaded as at 24*a*, and mounting an elongated support plate 26 on rod 24, as by means of mounting section 26*a* and associated holding nuts 28. Support plate 26 may have a depending rod 30 supported therefrom, as by means of threaded end section 32 extending through a complementary opening 34 in the support plate 26. A series of the openings 34 may be provided for adjusting the upstream position of the pusher mechanism 22 with respect to the mouth 19 of the funnel portion 17. Rod 30 at its lower end may have a generally arcuate-shaped pusher member 36 (FIGS. 4 and 7) which is adapted to slidingly engage the top side of the inner web 12*a* and maintain it in engagement with the outer web 10*a* as the webs move relative to the pusher mechanism 22, and into the crumpler section 16. As best seen in FIGS. 2 and 7, pusher member 36 extends below the horizontal plane of the lower extremity of mouth 19 and below the rolled edge portions R of the sheetlike material. Threaded end portion 32 of rod 30 in conjunction with nuts 37 provide for vertical adjustment of pusher 36. As can be seen in FIG. 4, the mouth 19 of the funnellike portion 17 of the crumpler is preferably provided with a curved guide member 40 defining at least the lower extremity of the path of movement of the superimposed webs of sheetlike material, for guiding the spirally rolled edge portions R of the sheetlike material as they pass into the mouth 19 and toward the throat 20. Guide 40 ensures that the edges will not inadvertently tear due to engagement with the lower corners of portion 17 of the crumpler and aids in rolling the edges of the webs of material into spiral form. As can be best seen from FIG. 7, the rolled edge portions R of the weblike stock material commence to crumple inwardly as at 41 as the flow of stock material passes the pusher mechanism 42. The crumpling occurs in a random pattern and continues as the stock material passes into funnel portion 17 and thence into reducing portion 17*a* of the crumpler. Such random deformation of the stock material produces considerable void areas in the formed pad, resulting in a low density pad. The length of pusher member 36 is preferably approximately equal to the internal width of throat 20.

Generally central portion 17*a* of crumpler section 16 is preferably of rectangularlike configuration, which causes compression of the webs of material into a padlike configuration as they pass through the throat 20 and into portion 17*a*. Portion 17*a* preferably has slots 44 (FIGS. 1 and 2) in the upper and lower walls thereof and into which extend stitcher means FIG. for connecting the confronting abutting rolled-edge portions R of the sheet material, as the latter is drawn through the crumpler section. In the embodiment illustrated, stitcher or connecting means 45 comprises loosely meshed equal size spur gears 46, 48. Gears 46 and 48 are mounted upon a respective shaft 46*a*, 48*a* which in turn are rotatably mounted in bearing structure 50 secured as by means of bolts 52 to the frame 54, supporting the gearing. Lower shaft 48*a* may have a pulley 56 secured thereto, which in turn is operably coupled as by means of belt and pulley 58 to a geared speed-reduction unit 60, which in turn is driven by a preferably electric motor 62. It will be seen that, upon actuation of the motor 62, the pulley 56 drives the shaft 48*a*, which in turn rotates the gear 48, thus rotating the meshed gear 46. Bearings 50 are preferably adjustably mounted as by means of elongated slots in the framework 54, for selectively varying the spacing between the pitch diameters of the meshed gears, thus providing for varying the degree of stitching provided by the stitching or connecting mechanism. As the crumpled weblike material passes into the stitching mechanism, the confronting sections of the rolled edges R thereof which have been compressed and urged together due to the funnel portion 17 and central reducing portion 17*a* of the crumpler section, are stitched together due to the coining action of the meshing gears, and generally centrally of the dunnage pad P, and as at 66 (FIG. 5) to securely hold the crumpled webs of sheet material together into a unitary padlike configuration having very good resiliency characteristics. After passing the stitching mechanism 45, the formed pad passes into distal end compressing portion 17*b* of the crumpler section prior to being emitted from the machine.

Compressing portion 17*b* has a downwardly sloping top wall 68 and inwardly sloping or converging sidewalls 70 which further compress the pad of dunnage material into a formed, resilient article.

A cutter mechanism 76 of any suitable type may be provided at the exit end of compressing portion 17*b*, for selectively cutting the produced run of dunnage pad into desired lengths. In operation, the motor 62, which operates the stitcher 45 which in turn moves the stock material through the machine, would be preferably provided with a conventional foot switch (not shown) wherein an operator could selectively control the emission of the length of padlike dunnage from the mechanism and, by means of cutter mechanism 76, could selectively cut the formed dunnage pad to the desired lengths wanted, and could then shut down the machine until further cushioning dunnage was needed.

As can be seen in FIGS. 5 and 6, the lateral rolled portions of the dunnage product P are of generally oval, pillowlike configuration, having considerable resiliency due to the superimposed rolling of the lateral edges of the webs of stock material and random crumpling of such rolled edge portions, while the central section, which is stitched as at 66, is compressed together into a fastened or held configuration, which holds the dunnage product in padlike form, while providing excellent resiliency in the product. A 12-inch wide dunnage pad has been produced from a total paper width of 100 inches made up of one 60-inch wide roll (e.g. roll 10) and one 40-inch wide roll (e.g. roll 12) of 30 pound Kraft paper. A piece of the dunnage pad approximately 9½ feet long weighs about 1 pound and provides about 1 cubic foot of cushioning dunnage, with the latter thus having a density of about 1 pound per cubic foot. Other widths of pads can, of course, be produced by varying the size of the crumpler section. Varying the stock material width and/or the weight and type of paper will, of course, vary the density of the finalized pad. While the feed of stock material and orientation of the mechanism has been illustrated in the drawings as being generally horizontal, it will be understood that it could be arranged for generally vertical feeding and orientation.

From the foregoing discussion and accompanying drawings, it will be seen that the invention provides a novel method of producing cushioning dunnage of padlike configuration and wherein sheetlike material may be taken from a roll thereof and rolled at its lateral edges into spirallike form, with the

rolled edge portions oriented into confronting relationship and crumpled radially inwardly into a padlike configuration, and wherein the crumpled pad is connected together generally centrally thereof resulting in a padlike dunnage product of considerable resiliency and of relatively low density per unit volume. The invention also provides a novel method of producing a dunnage product which is readily handled and which has increased resiliency over most dunnage heretofore known, and which may be formed from sheetlike material such as ordinary Kraft paper, which is storable in compact roll form prior to its formation into suitable dunnage, and which may be fed directly from a dunnage-producing mechanism into containers at a packing station.

The terms and expressions which have been used are used as terms of description and not of limitation, and there is no intention in the use of such terms and expressions of excluding any equivalents of any of the features shown or described or portions thereof, and it is recognized that various modifications are possible within the scope of the invention claimed.

WHAT IS CLAIMED IS:

1. In a method of producing low density cushioning dunnage in padlike form from sheetlike material, comprising taking at least one web of sheetlike material of predetermined width, rolling the lateral edges of the web inwardly by pushing on the web laterally with a generally transversely extending means, to cause said inward rolling of the lateral edges of the web while pulling the web lengthwise thereof, crumpling the rolled edges of the web radially inwardly into a padlike configuration of relatively low density per unit volume so that the rolled edges of the sheetlike material are disposed in generally confronting abutting condition, and then connecting the rolled and crumpled edge portions together by coining of the edge portions along the juncture thereof to form a unitary padlike dunnage product.

2. A method in accordance with claim 1 including pushing the formed dunnage product forwardly after said connecting operation and applying further radial crumpling to further compress the padlike configuration into an article of greater density.

3. A method in accordance with claim 2 including continually shearing the formed padlike article transversely thereof into selected lengths.

4. A method in accordance with claim 1 including the step of providing a plurality of webs of said sheetlike material, orienting the latter into generally engaged surface-to-surface superimposed relation during said lateral pushing and lengthwise pulling of the webs, and into generally tensioned engagement with one another, prior to said radial crumpling of the sheetlike material into said padlike configuration, and wherein the step of rolling the lateral edges of the webs inwardly comprises utilizing a pusher of arcuate configuration extending generally transverse of the webs and engaging the confronting webs along the generally central portion thereof.