Aug. 21, 1945. L. W. MICHAEL 2,383,330

SPINNING TOOL

Filed May 5, 1943

Fig. 1.

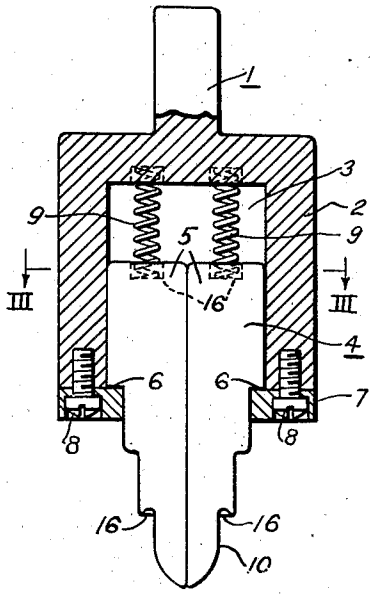

Fig. 3.

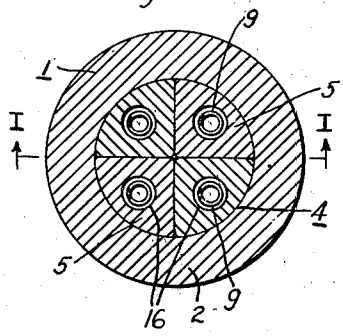

Fig. 4.

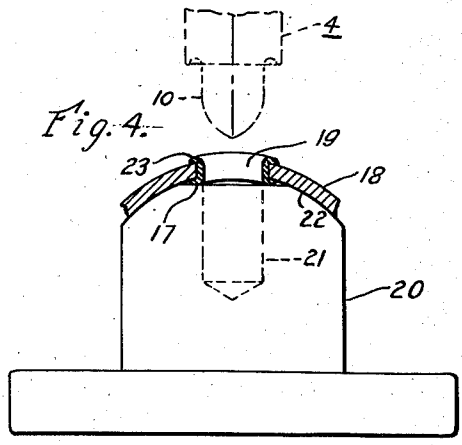

Fig. 2.

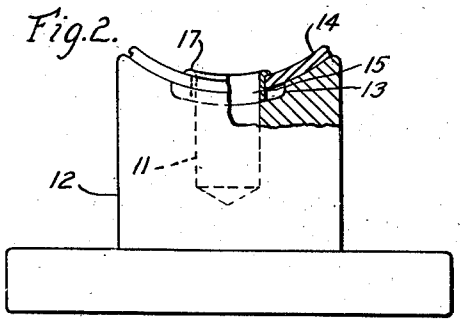

WITNESSES:
Alice L. Howell
Wm. C. Groome

INVENTOR
Lawrence W. Michael.
BY
Paul E. Friedemann
ATTORNEY

Patented Aug. 21, 1945 2,383,330

UNITED STATES PATENT OFFICE

2,383,330

SPINNING TOOL

Lawrence W. Michael, Lima, Ohio

Application May 5, 1943, Serial No. 485,789

5 Claims. (Cl. 218—14)

This invention relates to a spinning tool for forming metallic eyelets or grommets, and more particualrly to an improved tool adapted to form the end of a grommet to conform to a surface having an irregular contour.

The use of metallic rings or grommets comprising a short metallic tube, the ends of which are bent outwardly and over to fasten it in place as a liner for an opening in a plate-like structure, is well known. However, tools for forming the grommet have been found defective where the grommet is to be used as a liner for an opening in a plate having an irregular contour, such as on a curved plate. In such cases, the bent-over end or lip of the grommet engages only with the high points on the plate and is spaced from the low points in such plate. Consequently, the grommets frequently are not securely fastened to the structure in which the opening is formed where such structure has a curved surface or a surface of an otherwise irregular contour.

One of the principal objects of this invention is to provide an improved tool which is capable of shaping the end of the grommet to conform with the contour of the surface in which it is mounted.

A further object of the invention is to provide a spinning tool for forming grommets which has a working surface movable in an annular path to form the end of a grommet, and in which such working surface is carried by a part movable back and forth parallel to the axis of rotation of the tool, so that the grommet end may be shaped to conform with a surface having an irregular contour.

A further object of the invention is to provide a spinning tool for forming grommets which includes a plurality of independently movable parts which may automatically adjust their positions according to the surface shape of the structure on which the grommet is to be mounted, so that the grommet end will be firmly engaged with such surface entirely around its periphery.

Other objects and advantages of this invention will be apparent from the following description and accompanying drawing, in which:

Figure 1 is a longitudinal sectional view of a spinning tool constructed in accordance with the principles of this invention, the section being taken along the line I—I indicated in Fig. 3;

Fig. 2 is a side elevational view of a matrix die part for cooperation with the tool shown in Fig. 1, a part of Fig. 2 being shown in section;

Fig. 3 is a sectional view taken on the line III—III of Fig. 1; and

Fig. 4 is a view similar to Fig. 2 illustrating the final step in securing a grommet in position as a liner for an opening formed in an article having a curved surface.

Referring to the drawing, the numeral 1 designates a tool holder adapted to be secured to a drill pess of similar conventional construction by which it may be rotated while being moved in an axial direction. The holder 1 comprises a body portion 2 having a cylindrical recess 3 therein for the reception of a cylindrical working tool indicated as a whole by the numeral 4. As best shown in Fig. 3, the tool portion 4 comprises separate sector-shaped sections 5 which when mounted together as shown form a cylindrical tool 4. Each of the sections 5 is provided with a ledge 6 adapted to engage with a ring 7 which is secured to the body 2 by fastening elements 8, and has a portion thereof projecting radially inwardly from the mouth of the opening 3. A spring 9 is provided for each section 5 to bias such sections to a limited position in the holder 2 with the ledge 6 in engagement with the ring 7. By this construction, the sections 5 are movable independently of each other in an axial direction within the holder 2 against the bias of the springs 9 for a purpose to be described.

Projecting outwardly from the ledge 6 and tool holder 2, each of the sections 5 is so formed that they collectively provide a cylindrical end portion 10 on the tool 4 which is receivable in an opening 11 formed in a matrix die part 12. The diameters of the cylindrical end opening 10 and opening 11 are made to conform to the inner diameter of the grommet to be formed. The opening 11 is enlarged as at 13 to provide a ledge for holding a metallic tube in position as one of its end portions is formed. A member 14 having an opening therein aligned with the opening 11 and a surface conforming to the surface on which the grommet is to be finally secured is shown in position on the matrix die part 11. A metallic tube 15 is then placed in position with its lower edge resting on the surface provided by the enlarged opening 13 as shown in Fig. 2. Each of the sections 5 is provided with a cup-shaped recess 16 so that they collectively form a working surface extending annularly around the tool 4 at the upper end of the cylindrical portion 10.

To form the end 17 of the grommet, as shown in Fig. 2, the tool 2 is rotated and lowered until

the cup-shaped recess 16 engages with the top of the tube 15. Further downward movement of the tool holder 2 will cause the sections 5 to move upwardly and compress the springs 9. A spinning action will then be had which will bend the end of the tube outwardly to form the grommet lip portion 17. As the tool is rotated, each of the sections 5 will move axially in a path determined by the contour of the upper surface on the member 14. The working surfaces 16 on each of the segmental sections 5 engage only with a portion of the grommet 15, and since they are movable independently of each other are effective to form the grommet end as shown in Fig. 2.

A subsequent operation with the tool 2 is effective to form the other end of the grommet 15 and to fixedly secure it in position. In Fig. 4, there is shown an article 18 having an opening 19 formed therein. A matrix 20 having an opening 21 formed therein similar to the opening 11 is provided for the final operation. The grommet 15 with its end 17 shaped to conform with the curved surface 22 of the article 18 is mounted in position with the end 17 positioned on the matrix 20 as shown in Fig. 2. The tool portion 4, as shown in dotted lines in Fig. 4, may then be rotated and lowered to form the grommet end 23. In this manner, the grommet ends 17 and 23 are firmly engaged with both of the surfaces defining the opening 19, and such engagement is had uniformly around the entire periphery of the opening 19.

From the foregoing, it will be apparent that there is provided a spinning tool which is effective to form grommet ends to conform with the surface contour of the article mounting the same. By forming the tool of separate sections, each of which is spring biased into engagement with the work, there is provided a plurality of metal working surfaces respectively movable in an annular path to perform spinning operations while moving axially in accordance with the contour of the surface on which the metal is being worked. The springs are effective to move the tool section downwardly to force the metal being worked down into the low spots of the surface on which the grommet is being formed and are compressible as the tool sections move over high spots on such surface. In this manner, it will be seen that each of the tool working parts is effective to apply a substantially uniform spinning action on a grommet end entirely around its periphery so that the grommet end is uniformly engaged around the peripheral surface defining the opening in which the grommet is mounted.

Since certain changes may be made in the above construction and different embodiments of the invention may be made without departing from the scope thereof, it is intended that all matter contained in the above description or shown in the accompanying drawing shall be interpreted as illustrative and not in a limiting sense.

I claim as my invention:

1. A spinning tool for shaping the end of a grommet to conform with a surface of irregular contour comprising a rotatable holder, a grommet shaping die comprised of a plurality of separate cooperating sections of sector-shaped cross-section arranged so as to form a substantially continuous cylindrical die surface, and means mounting said sections in said holder for movement, independently of each other, in an axial direction with respect to said holder.

2. A spinning tool for shaping the end of a grommet to conform with a surface of irregular contour comprising a rotatable holder, a grommet shaping die comprised of a plurality of separate cooperating sections, means mounting said sections in said holder for movement, independently of each other, in an axial direction with respect to said holder, and a separate spring for each of said sections for biasing said sections outwardly to a limited position in said holder, each of said sections being movable inwardly against its bias to follow the contour of the surface on which the grommet end is being formed.

3. A grommet forming apparatus, comprising a cylindrical shaping tool having a cylindrical end portion and a cup-shaped annular ledge positioned inwardly of said end portion for shaping the end of a grommet, said end portion having a diameter conforming to the inner diameter of the grommet to be shaped, a rotatable holder for said tool, said tool comprising a plurality of separate sector-shaped sections, and means mounting said sections in said holder for movement, independently of each other, in an axial direction with respect to said holder, such axial movement being had upon rotation of said holder and the shaping of the grommet end uniformly about an opening in a matrix by said cup-shaped ledge.

4. A grommet forming apparatus, comprising a cylindrical shaping tool having a cylindrical end portion and a cup-shaped annular ledge positioned inwardly of said end portion for shaping the end of a grommet, said end portion having a diameter conforming to the inner diameter of the grommet to be shaped, a rotatable holder for said tool, said tool comprising a plurality of separate sector-shaped sections, means mounting said sections in said holder for movement, independently of each other, in an axial direction with respect to said holder, and individual springs for biasing each of said sections outwardly to a limited position in said holder, said sections being movable inwardly against the bias of said springs upon rotation of said holder and the shaping of the grommet end by said cup-shaped ledge.

5. In a tool of the character described, a holder comprising a body portion having a cylindrical recess disposed so as to form an opening at one end of said portion, a working tool comprising a plurality of sector-shaped sections cooperating together to form a cylindrical device receivable in said recess, said sections being formed to provide an annular ledge intermediate the ends of said device, a retaining ring secured to said body portion and extending radially inwardly from the opening of said recess for engagement with said ledge to prevent movement of said sections out of said opening, each of said sections having an end projecting out of said recess and having a working surface thereon for engagement with the end of a grommet, and a separate spring for each sector-shaped section for biasing the same to a position with said ledge engaged with said retaining ring.

LAWRENCE W. MICHAEL.