(No Model.) 2 Sheets—Sheet 1.

G. H. COBURN.

KNITTING MACHINE.

No. 395,314. Patented Jan. 1, 1889.

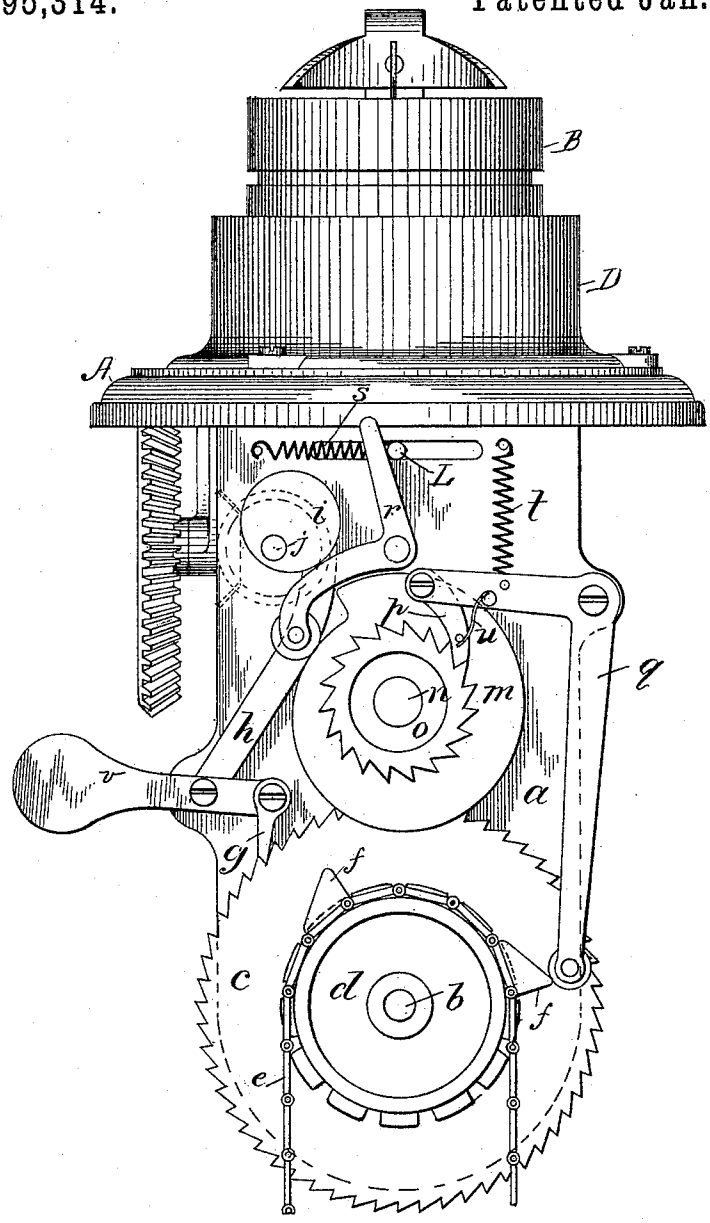

Fig 1.

WITNESSES.

Chas. Spaulding

Charles E. Moss

INVENTOR.

Geo. H. Coburn.

By Wight, Brown & Crossley.

Attys.

N. PETERS, Photo-Lithographer, Washington, D. C.

(No Model.) 2 Sheets—Sheet 2.

G. H. COBURN.

KNITTING MACHINE.

No. 395,314. Patented Jan. 1, 1889.

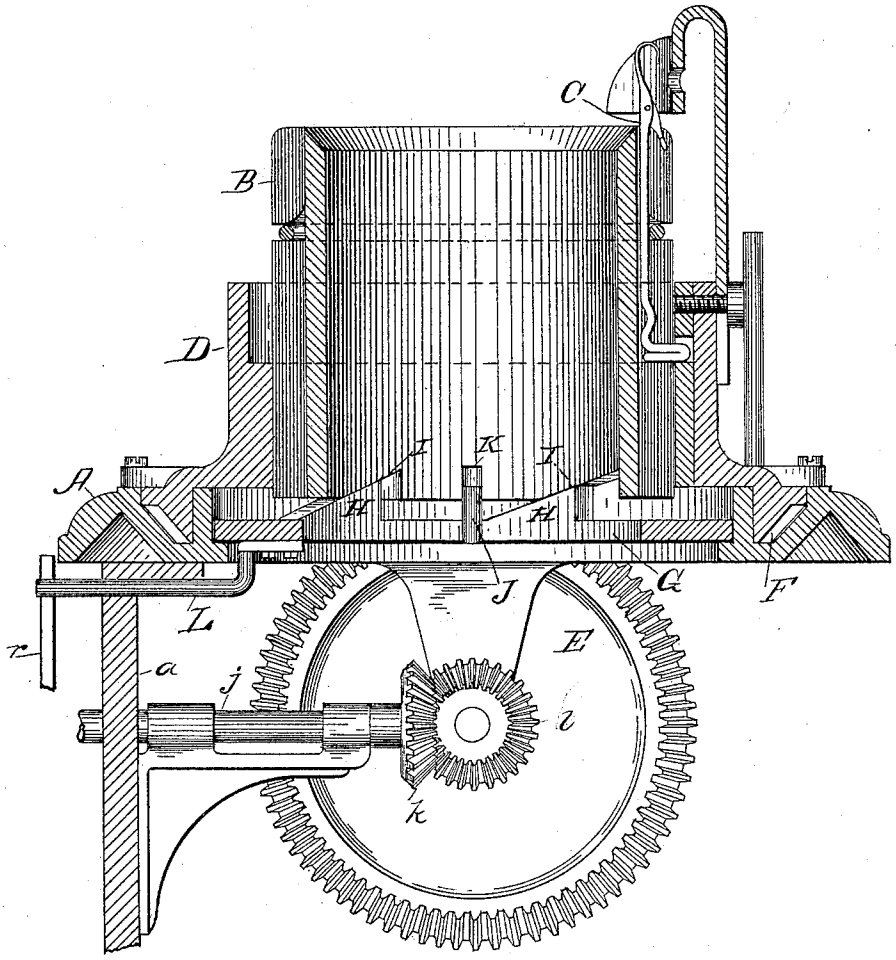

Fig. 2.

WITNESSES.

Chas. Spaulding

Charles E. Moss

INVENTOR.

Geo. H. Coburn.

By

Mighr. Brown & Crossley.

Attys.

N. PETERS, Photo-Lithographer, Washington, D. C.

UNITED STATES PATENT OFFICE.

GEORGE H. COBURN, OF LACONIA, NEW HAMPSHIRE.

KNITTING-MACHINE.

SPECIFICATION forming part of Letters Patent No. 395,314, dated January 1, 1889.

Application filed April 25, 1888. Serial No. 271,829. (No model.)

To all whom it may concern:

Be it known that I, GEORGE H. COBURN, of Laconia, in the county of Belknap and State of New Hampshire, have invented certain new and useful Improvements in Knitting-Machines, of which the following is a specification.

My invention relates to knitting-machines generally, and particularly to that type or kind of machine shown and described in United States Letters Patent No. 214,989, dated May 6, 1879, the object being to provide means whereby the mechanism for raising and lowering the needle-cylinder to lengthen and shorten the stitch may be automatically accomplished.

My invention consists of the improvements hereinafter described and claimed, and for an entirely clear understanding of said improvements reference is had to the accompanying two sheets of drawings and to the letters of reference marked thereon, forming a part of this specification.

Of the drawings, Figure 1 is a side elevation of the machine shown and described in the patent aforesaid fully equipped with my improvements. Fig. 2 is a vertical sectional view of the same, showing a portion of my improvements applied thereto.

The same letters of reference designate the same parts in both views.

In the drawings, A designates the bed of the machine.

B is the needle-cylinder provided with vertical grooves, in which are arranged the needles C, which are reciprocated by the usual cams on the interior of the cam-cylinder D, which latter instrumentality is rotated by the bevel gear-wheel E, gearing with the teeth F, formed on the lower edge of the cam-cylinder. G is the ring or annulus resting upon suitable lugs formed on the bed-plate and provided with inclines H, which inclines correspond with inclines I in the lower end of the needle-cylinder, and the cylinder rests on said ring, so that by turning the ring or annulus G the needle-cylinder may be raised or lowered, the cylinder itself being prevented from turning by means of a stud, J, connected with the bed A and projecting into a slot, K, in the needle-cylinder. An arm or a lever, L, is connected with the ring or annulus G on one side and extends outward through a slot in the machine-framing, so that by moving said lever L the ring or annulus G may be moved, with the result hereinbefore mentioned.

The devices thus far described are substantially the same in form and arrangement as those set forth in the before-mentioned patent, and hence constitute no part of my present improvement.

a designates an apron or bracket secured at its upper end to the bed of the machine by means of bolts and nuts or other suitable means, and journaled on a stud, *b*, connected with the apron or bracket *a*, is a ratchet-wheel, *c*, with which is connected a sprocket-wheel, *d*, carrying a pattern-chain, *e*, provided with cam swells or "nuptions" *f*. Ratchet-wheel *c* is turned the distance of one tooth at each rotation of the cam-cylinder by means of a pawl, *g*, the free end of the operating-arm *h* of which rests against a cam, *i*, turning with a shaft, *j*, which latter device is provided with a gear, *k*, meshing with a gear, *l*, on the same shaft with gear-wheel E, which drives cam-cylinder D.

m designates a cam adapted to turn on a stud, *n*, secured to the apron *a*, and connected with said cam *m* is a ratchet-wheel, *o*, adapted to be rotated by a pawl, *p*, pivoted to one end or arm of a lever, *q*, the other end of which arm or lever extends down and rests against pattern-chain *e*, so as to be operated upon by the cam swells or projections *f*. With this construction cam *m* will be turned the distance of one tooth of ratchet-wheel *o* each time that a swell or nuption *f* comes in contact with lever *q*.

r designates an elbow or a bell-crank lever fulcrumed on apron *a* and having one end resting on cam *m* and the other against arm or lever L, so that as cam *m* is rotated and its highest point rides under the end of elbow *r* resting thereagainst, said lever will be rocked on its fulcrum and move lever L and its attached annulus or ring G around, so as to raise the needle-cylinder and lengthen the stitches; and as the end of lever *r*, in contact with cam *m*, passes from the highest to the lowest point of said cam, the annulus or ring G will be permitted to turn in the oppo-

site direction, so as to lower the needle-cylinder and shorten the length of the stitches. The weight or gravity of the needle-cylinder and the work thereon will be sufficient to accomplish this, or a spring, *s*, may be attached to the outer end of lever L and the bed of the machine to effect the result.

t designates a spring to hold the free end of lever *q* in contact with pattern-chain *e*; *u*, a spring to keep pawl *p* engaged with the teeth of ratchet-wheel *o*, and *v* a weight on pawl-arm *h* to keep the free end of said arm in engagement with cam *i*.

It is obvious that the form and arrangement of the parts described may be varied within the limits of mechanical skill without departing from the nature or spirit of the invention. Therefore I do not confine myself to the precise construction and arrangement of the devices shown and explained.

My invention is particularly designed to control the position of the needle-cylinder vertically, so as to gradually lengthen and shorten the stitches in knitting a tubular web for a stocking, to the end that such tubular web may be formed to fit the leg and foot of the wearer. For example, the foot and instep portion of the stocking will be knit in close or short stitch, in which case the end or arm of elbow-lever *r*, in contact with cam *m*, will rest on the lowest point of said cam; but when a longer stitch is to be produced, as when the calf portion of the stocking is to be knit, said cam will be rotated so that the end of lever *r* in contact therewith will gradually ride up to the highest part of said cam, moving lever L and its attached ring or annulus and raising the needle-cylinder.

It will be observed that the times when the needle-cylinder may be raised and lowered may be governed entirely by the pattern-chain *e* and the cam swells or nuptions *f* thereon, and that the raising and lowering of the needle-cylinder is automatically effected, which is the chief object sought to be accomplished by my invention.

Having thus described my invention, what I claim is—

1. The combination, with a needle-cylinder provided on its lower end with inclines, the needles, and a rotary cam-cylinder to operate them, of a ring or annulus provided with inclines on which the needle-cylinder rests, a laterally-extending arm connected with the ring or annulus, a lever having one arm resting against said laterally-extending arm and the other against a rotary cam, and said cam, substantially as set forth.

2. The combination, with a rotary sprocket-wheel, a pattern-chain, a pivoted lever provided with a pawl adapted to be operated by said pattern-chain and a ratchet-wheel with which said pawl engages, a cam connected with said ratchet-wheel, and an elbow-lever having one arm engaged with said cam, of the ring or annulus G, provided with arm L, with which the other arm of the said elbow-lever is engaged, the needle-cylinder, needles, and cam-cylinder, substantially as set forth.

In testimony whereof I have signed my name to this specification, in the presence of two subscribing witnesses, this 19th day of April, A. D. 1888.

GEORGE H. COBURN.

Witnesses:
S. S. JEWETT,
S. E. BLACKSTONE.