Sept. 29, 1925. 1,555,589

T. LA FARINA

FLOATING CHAIR

Filed Feb. 25, 1925

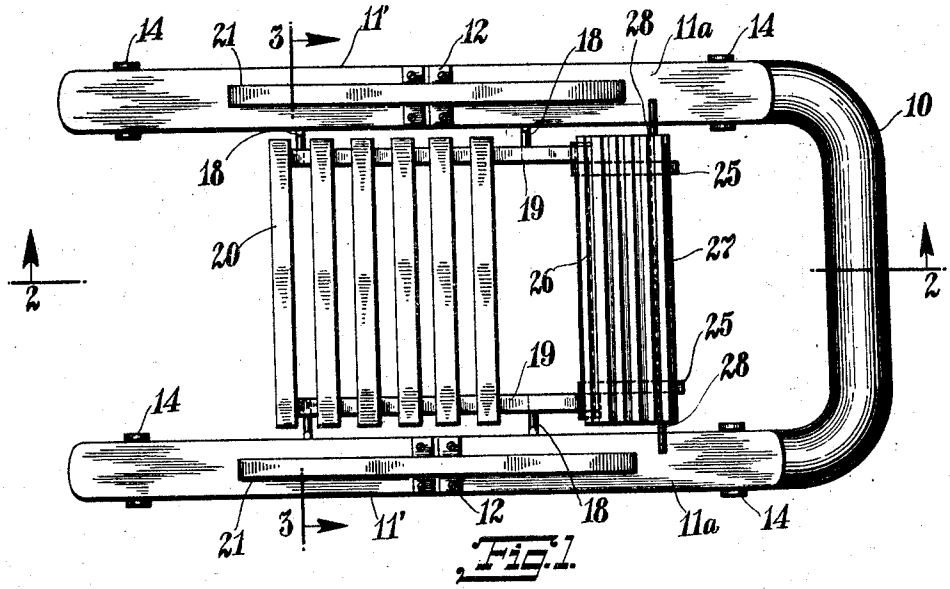

Fig. 1.

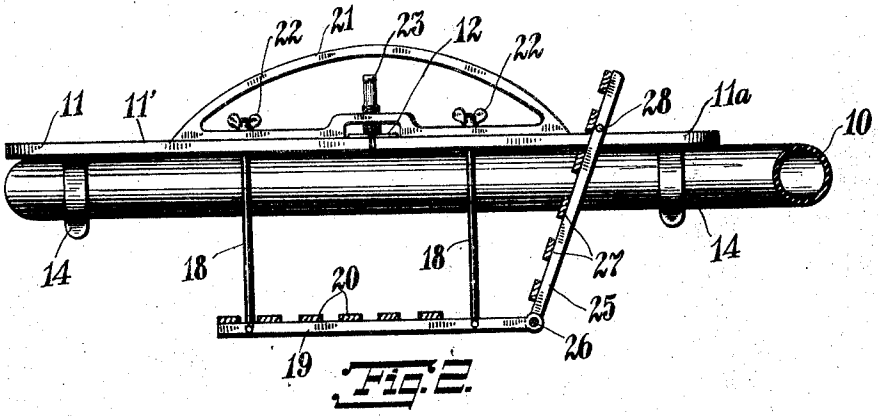

Fig. 2.

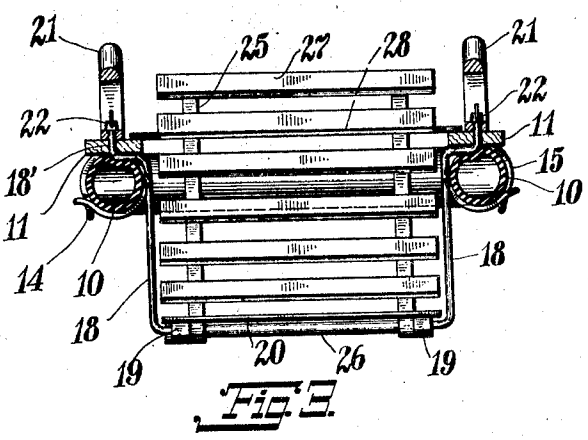

Fig. 3.

INVENTOR
Thomas La Farina
BY
ATTORNEY

Patented Sept. 29, 1925. 1,555,589

UNITED STATES PATENT OFFICE.

THOMAS LA FARINA, OF NEW YORK, N. Y.

FLOATING CHAIR.

Application filed February 25, 1925. Serial No. 11,412.

To all whom it may concern:

Be it known that I, THOMAS LA FARINA, a citizen of the United States, residing at New York city, in the county of New York and State of New York, have invented certain new and useful Improvements in Floating Chairs, of which the following is a specification.

This invention relates to a float intended more particularly for use by bathers, the invention having for an object the provision of a novel float of this kind on which the bather can rest comfortably in a sitting posture, and with his body partially submerged, a further object of the invention relating to the making of the float collapsible.

For further comprehension of the invention, and of the objects and advantages thereof, reference will be had to the following description and accompanying drawing, and to the appended claims in which the various novel features of the invention are more particularly set forth.

Fig. 1 of the drawing is a plan view of my improved float.

Fig. 2 is a longitudinal vertical sectional view taken on the line 2—2 of Fig. 1.

Fig. 3 is a transverse sectional view taken on the line 3—3 of Fig. 1.

In constructing my improved float I provide a length of rubber tubing 10 that is arranged in U-shape as shown in Fig. 1 of the drawing. Upon the legs of this tubing I mount a pair of frame or bracing members 11 that are here in the form of boards consisting of two sections 11′ and 11ª hinged to one another as at 12. These members 11 are secured upon the legs of the tubing 10 by suitable means, preferably the straps 14 which are fixed to the said members and passed around the tube and provided with ordinary buckles 15 whereby they may be detachably engaged with the said tube 10, there being a pair of these straps for each leg of the tube to engage the said legs near opposite ends of the latter.

Fixed at their upper ends to each board are two rods 18 that are spaced along the boards. These rods depend from the said boards, within the confines of the tube 10, and are attached at their lower ends to the side frame bars 19 of a seat that is thereby supported by the float, this seat comprising a number of slats 20 secured on the top faces of the said bars. To connect the rods 18 to the boards 11 their upper ends are laterally offset as at 18′ and extend upward through borings in the said boards and through registering borings in the bottom bars of skeleton bracing members 21 of segmental form that serve both as handles and to retain the two sections of each board in extended position. The said upper ends of the rods 18 have nuts 22 screwed thereon, these nuts serving both to attach the rods to the said boards and to clamp the segmental members 21 thereon, the laterally turned portions of the rods forming shoulders acting in opposition to the nuts 22. The valve 23 for inflation of the tube may be conveniently projected upward through apertures formed in one of the boards and the adjacent member 21.

The seat is provided with a back consisting of a pair of side bars 25 that are hinged at their lower ends to a crossbar 26 fixed to and extending between the rear ends of the seat bars 19, these back bars having the cross slats 27 secured thereto. The back element is retained in the desired erect position by means of a rod 28 that extends transversely through the side bars of the back and has its ends projecting over the boards 11.

As will be apparent from the above description, I have provided float for a bather on which the latter may comfortably rest with his body submerged. When the float is not used it may be readily taken apart and folded to compact form. In taking the float apart, the nuts 22 are unscrewed, both freeing the handles 21 and the seat from the boards 11. The tube 10 is deflated and removed from the boards, and two sections of the latter may be folded upon one another, while the back of the seat may be folded down.

Having thus described my invention, what I claim as new and desire to protect by Letters Patent of the United States is as follows:

1. A float comprising a flexible airtight tubing arranged to present side legs, a pair of boards attached to said tubing and extending along the said legs, and a seat attached to and depending from the said boards, said seat being removably attached to said boards and said boards being divided midway between their ends into two sections hinged to one another.

2. A float comprising a flexible airtight tubing arranged to present side legs, a pair of boards attached to said tubing and extending along the said legs, and a seat attached to and depending from the said boards, said seat being removably attached to said boards and said boards being divided midway between their ends into two sections hinged to one another, and a removable handle element extended along said boards above the said hinge points and secured at opposite ends to respective sections of the boards to retain the latter in extended position.

3. A float comprising a flexible airtight tubing arranged to present side legs, pair of boards extending along and resting upon the respective legs of the said tubing, said boards being made up of two sections hinged to one another, a handle-forming frame extending along the said boards over the hinge joints thereof and retaining the said boards extended, a seat positioned between the said legs of the tubing, rods supporting said seat, said rods passing upwardly through registering apertures in the said boards and the said frames, and having nuts screwed on their ends and serving to secure the rods and the said frame to the said boards, and means detachably securing the said tubing to the said boards.

4. A float comprising a flexible airtight tubing arranged to present side legs, pair of boards extending along and resting upon the respective legs of the said tubing, said boards being made up of two sections hinged to one another, a handle-forming frame extending along the said boards over the hinge joints thereof and retaining the said boards extended, a seat positioned between the said legs of the tubing, rods supporting said seat, said rods passing upwardly through registering apertures in the said boards and the said frames, and having nuts screwed on their ends and serving to secure the rods and the said frame to the said boards, and means detachably securing the said tubing to the said boards, comprising straps attached to the boards and encircling the said tubing.

5. A float comprising a flexible airtight tubing arranged to present side legs, pair of boards extending along and resting upon the respective legs of the said tubing, said boards being made up of two sections hinged to one another, a handle-forming frame extending along the said boards over the hinge joints thereof and retaining the said boards extended, a seat positioned between the said legs of the tubing, rods supporting said seat, said rods passing upwardly through registering apertures in the said boards and the said frames, and having nuts screwed on their ends and serving to secure the rods and the said frame to the said boards, and means detachably securing the said tubing to the said boards, said seat being formed with a hinged back, and a transverse rod attached to said back and removably engaged at its ends with the said boards to retain the said back in upright position.

In testimony whereof I have affixed my signature.

THOS. LA FARINA.