US010401220B2

(12) **United States Patent**
Baron et al.

(10) **Patent No.: US 10,401,220 B2**
(45) **Date of Patent: Sep. 3, 2019**

(54) **SPECTROMETER MODULE**

(71) Applicant: **Spectricity**, Mechelen (BE)

(72) Inventors: **Jerome Baron**, Brussels (BE); **Jonathan Borremans**, Lier (BE); **Andy Lambrechts**, Herent (BE)

(73) Assignee: **Spectricity**, Mechelen (BE)

(*) Notice: Subject to any disclaimer, the term of this patent is extended or adjusted under 35 U.S.C. 154(b) by 0 days.

(21) Appl. No.: **15/389,043**

(22) Filed: **Dec. 22, 2016**

(65) **Prior Publication Data**

US 2017/0184452 A1 Jun. 29, 2017

(30) **Foreign Application Priority Data**

Dec. 23, 2015 (EP) 15202374

(51) **Int. Cl.**

G01J 3/28	(2006.01)
G01J 3/02	(2006.01)
G01J 3/12	(2006.01)

(52) **U.S. Cl.**

CPC ***G01J 3/0264*** (2013.01); ***G01J 3/0262*** (2013.01); ***G01J 3/0291*** (2013.01); ***G01J 3/12*** (2013.01); ***G01J 3/28*** (2013.01); ***G01J 3/2803*** (2013.01); *G01J 2003/1213* (2013.01);

(Continued)

(58) **Field of Classification Search**

CPC G01J 3/2803; G01J 3/2823

See application file for complete search history.

(56) **References Cited**

U.S. PATENT DOCUMENTS

4,322,807	A	3/1982	Chamran et al.	
2002/0048055	A1 *	4/2002	Yushiya	H04N 1/486 358/518

(Continued)

FOREIGN PATENT DOCUMENTS

JP	63111429	5/1988
WO	WO 2008/014983	2/2008

OTHER PUBLICATIONS

Partial European Search Report dated Jul. 22, 2016 in European Application No. 15202374.3.

(Continued)

Primary Examiner — Thanh Luu

(74) *Attorney, Agent, or Firm* — Garlick & Markison; Kelly H. Hale

(57) **ABSTRACT**

A spectrometer module comprising a plurality of separate electronic circuit modules is disclosed. Each separate electronic module comprises an integrated sensor circuit including a light sensitive area occupying part of an area of the integrated sensor circuit, the integrated sensor circuit being arranged to detect incident light. In one aspect, the plurality of separate electronic circuit modules includes a group of adjacent electronic circuit modules. The light sensitive areas of the electronic circuit modules in the group are so arranged on the respective integrated sensor circuits that the group of adjacent electronic circuit modules is mounted so that the light sensitive areas thereof are arranged in vicinity to each other. The spectrometer module includes an optical module, which is common to said plurality of separate electronic circuit modules and arranged to direct incident light towards the light sensitive areas of each of said electronic circuit modules.

15 Claims, 3 Drawing Sheets

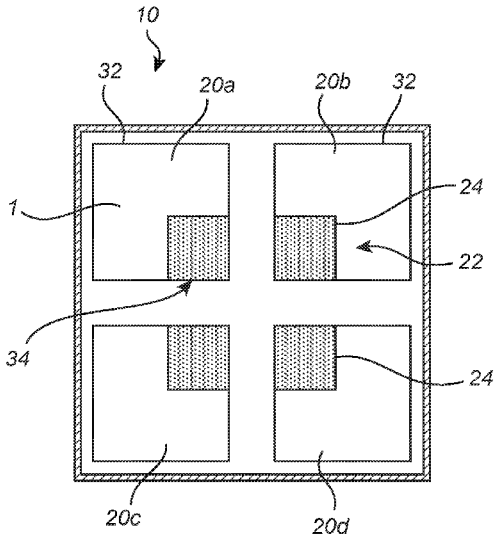

(52) **U.S. Cl.**
CPC *G01J 2003/2806* (2013.01); *G01J 2003/2826* (2013.01); *G01J 2003/2866* (2013.01)

(56) **References Cited**

U.S. PATENT DOCUMENTS

2004/0257600	A1*	12/2004	Hiromatsu	H04N 1/58 358/1.9
2006/0158647	A1	7/2006	Yao	
2007/0064119	A1	3/2007	Komiya et al.	
2007/0188764	A1	8/2007	Nisper et al.	
2009/0173883	A1	7/2009	Kauffman et al.	
2013/0153767	A1	6/2013	Savoy et al.	

OTHER PUBLICATIONS

Extended European Search Report dated Sep. 20, 2016 in European Application No. 15202374.3.

* cited by examiner

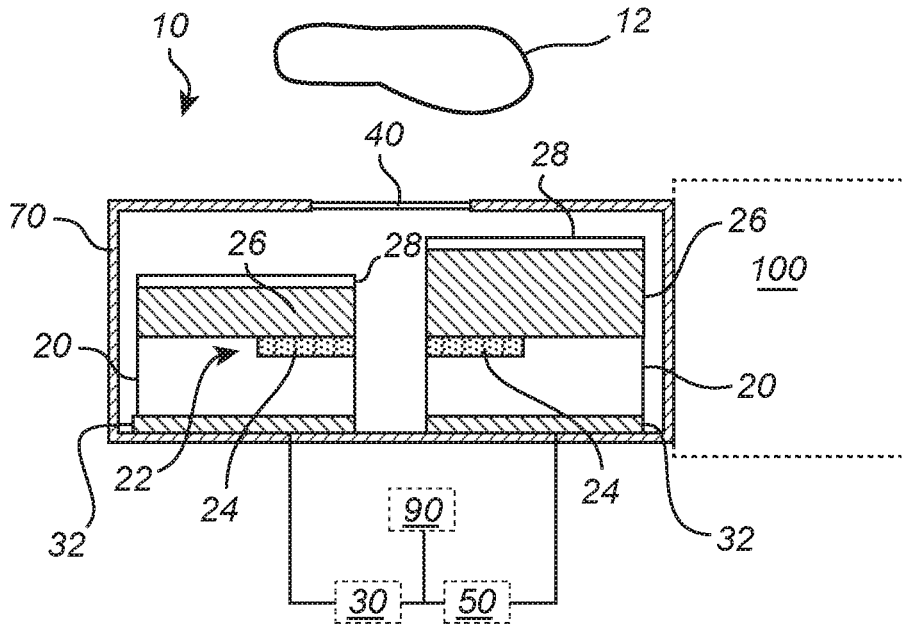
10
12
40
28
70
26
28
26
100
20
20
22
24
24
32
32
90
30
50

Fig. 1

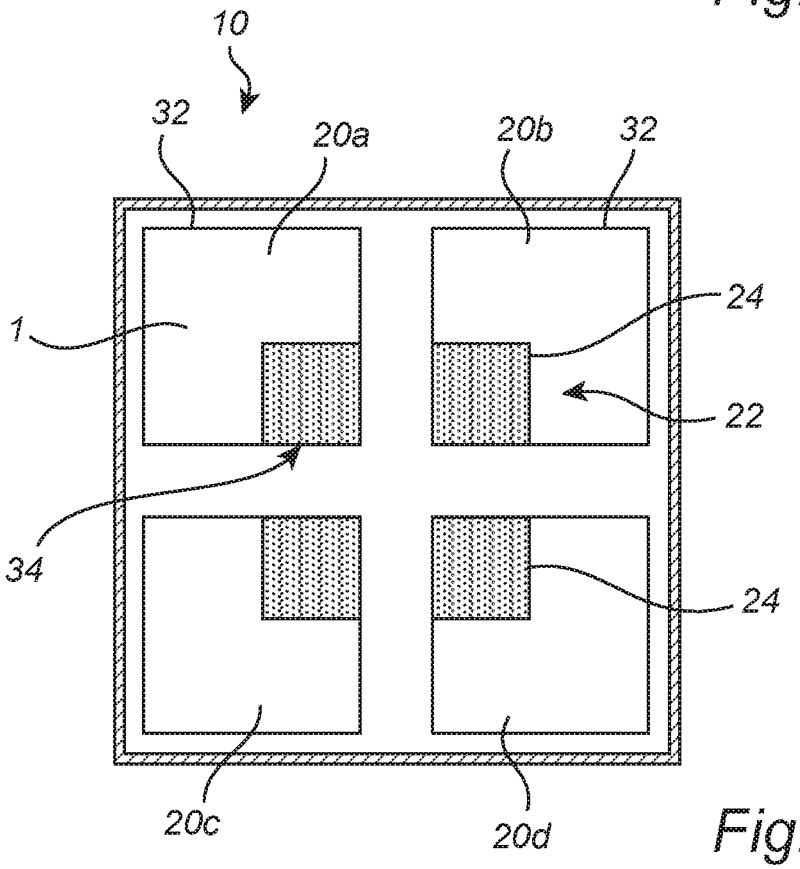
10
32
20a
20b
32
1
24
22
34
24
20c
20d

Fig. 2

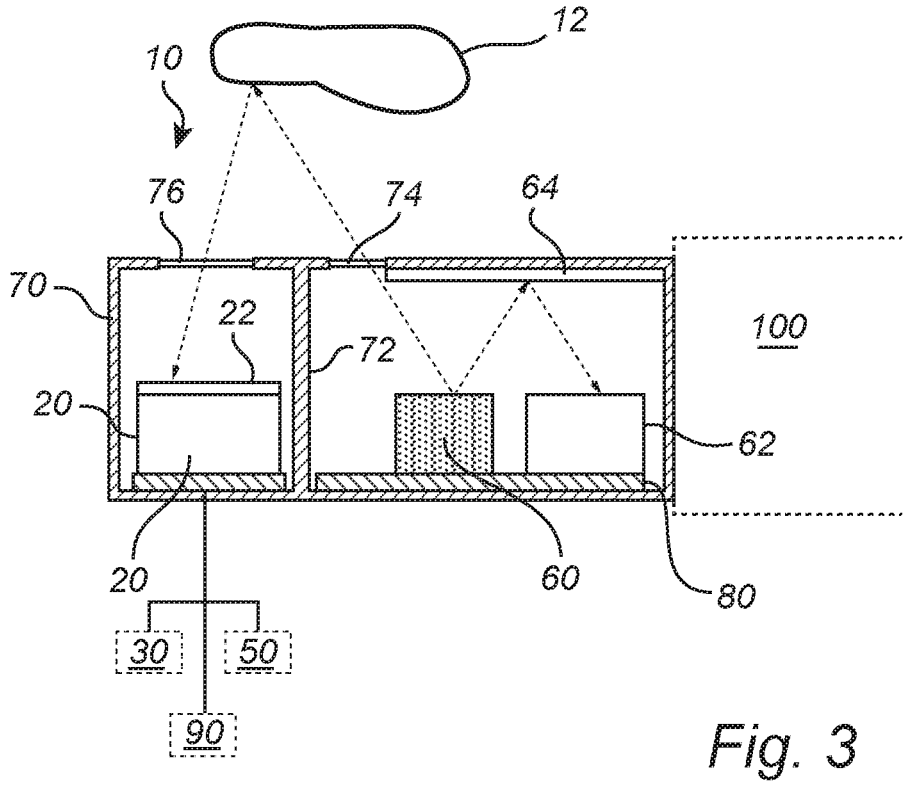
12
10
76
74
64
70
22
72
100
20
62
20
60
80
30
50
90

Fig. 3

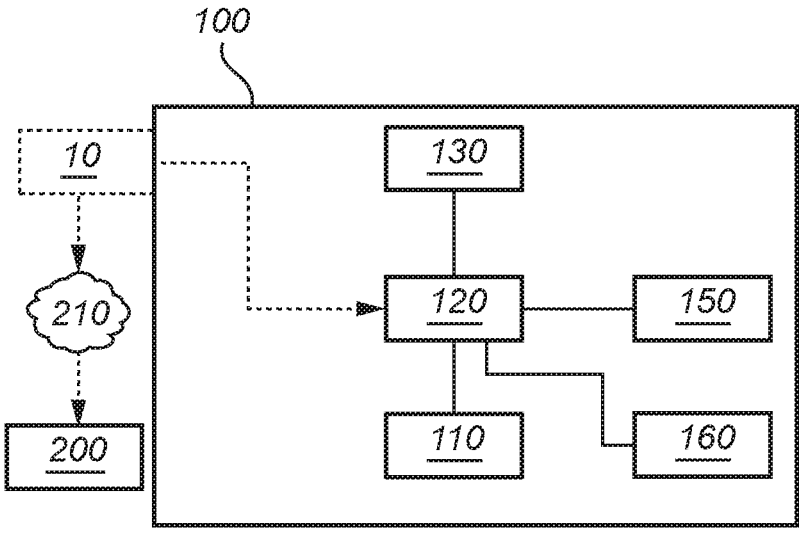
100
10
130
210
120
150
200
110
160

Fig. 4

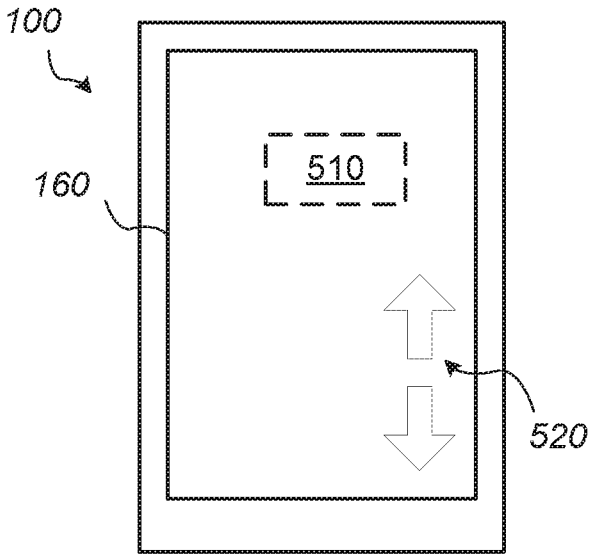

Fig. 5

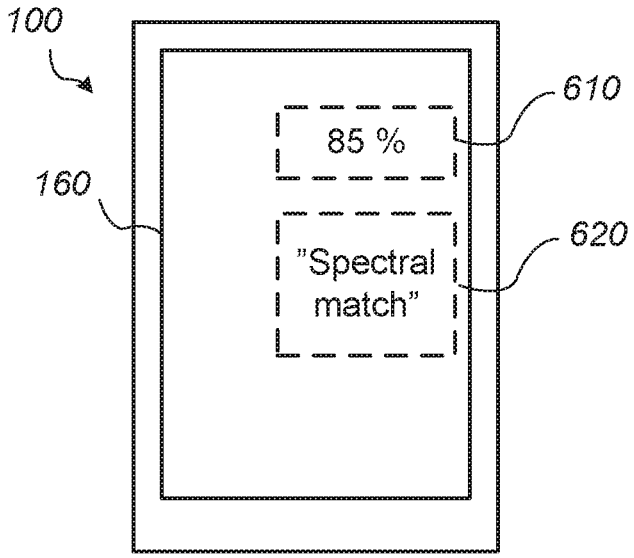

Fig. 6

SPECTROMETER MODULE

CROSS-REFERENCE TO RELATED APPLICATIONS

This application claims foreign priority to European Patent Application No. 15202374.3, filed Dec. 23, 2015, the contents of which are incorporated by reference herein in its entirety.

BACKGROUND

Technological Field

The present disclosure relates to recording of spectral information.

Description of the Related Technology

In spectral sensing, it is desired to acquire spectral information of an object. Spectral sensing should be understood as spectral information being acquired, wherein light from the object is captured and spectral information is extracted. The spectral sensing may capture spectral information from the object, such as from a single point or from a region of the object. Spatial information may optionally also be acquired, such that the spectral information may also be spatially resolved. In spectral sensing, incident light relating to multiple ranges of wavelengths is detected. The spectral sensing may for instance be used in analysis of objects, such as for determination whether a substance having a specific spectral profile is present in the object.

The terms multi-spectral sensing and hyperspectral sensing are often used. These terms do not have established definitions, but typically multi-spectral sensing refers to spectral sensing using a plurality of discrete wavelength bands, whereas hyperspectral sensing refers to sensing narrow spectral wavelength bands over a continuous spectral range. Hyperspectral sensing may also often use a larger number of spectral bands than what is used in multi-spectral sensing.

Spectral sensing may be performed by spectrometers, which are dedicated devices for acquiring spectral content of an object. Spectrometers may come in many different variants, depending on what application the spectrometer is to be used in.

SUMMARY OF CERTAIN INVENTIVE ASPECTS

It is an object of the present disclosure to provide an improvement to spectral sensing. One object of the disclosure may be to enable acquiring of spectral information using a relatively inexpensive device. One object of the disclosure may be to enable acquiring of spectral information using a relatively small device. One object of the disclosure may be to enable acquiring of spectral information, wherein a device for acquiring the spectral information is easy to use.

According to a first aspect of the present disclosure, there is provided a spectrometer module, comprising: a plurality of separate electronic circuit modules, each of said electronic circuit modules comprising an integrated sensor circuit including a light sensitive area occupying part of an area of the integrated sensor circuit, the integrated sensor circuit being arranged to detect incident light within a set wavelength interval, wherein the plurality of separate electronic circuit modules include a group of adjacent electronic circuit modules and the light sensitive areas of the electronic circuit modules in the group are so arranged on the respective

integrated sensor circuits that the group of adjacent electronic circuit modules is mounted so that the light sensitive areas thereof are arranged in vicinity to each other, and an optical module, which is common to said plurality of separate electronic circuit modules and arranged to direct incident light towards the light sensitive areas of each of said electronic circuit modules.

By arranging the light sensitive area in a particular area of the integrated sensor circuit, it is possible to mount adjacent electronic circuit modules in such a relationship that the light sensitive areas become closely arranged in the spectrometer module. This arrangement further facilitates having an optical module that is common to the plurality of separate electronic circuit modules.

Forming a spectrometer module according to the first aspect enables use of a very small spectrometer module which may be arranged to sense light of wavelengths that are vastly different.

Each of the plurality of separate electronic circuit modules may be arranged on a separate die.

By having separate electronic circuit modules formed on separate dies, manufacture of each electronic circuit module may be adapted to the specific requirements associated with the wavelengths of light to be detected by each respective electronic circuit module.

The light sensitive areas of said plurality of separate electronic modules may together define a sensor plane of the spectrometer module.

The light sensitive area may be arranged along a side of the electronic circuit module.

The light sensitive area may be arranged in a corner of the electronic circuit module.

The light sensitive area of each electronic circuit module may include a plurality of pixels, each pixel being arranged to detect incident light of a selected wavelength, wherein the plurality of pixels include sets of pixels that are sensitive to the same selected wavelength, and wherein the set of pixels is distributed over the light sensitive area.

The plurality of pixels of each light sensitive area may be arranged in a pattern which is repeated on said light sensitive area, wherein each one of the pixels of the pattern is arranged to detect incident light of a unique selected wavelengths.

The pattern may include at least eight pixels.

The spectrometer module may further comprise a processing unit, which is adapted to calculate an average intensity of incident light as detected by the plurality of pixels in a set of pixels.

Each of the electronic circuit modules may further comprise a filter bank, which is arranged on top of the light sensitive area, wherein the filter bank comprises a plurality of wavelength-selective filters for controlling the wavelength of light incident on pixels in the light sensitive area.

Each of the electronic circuit modules may further comprise a rejection filter arranged on top of the electronic circuit module for controlling a wavelength interval that is allowed to pass the rejection filter towards the light sensitive area.

Different rejection filters may be arranged on top of different electronic circuit modules.

According to a second aspect of the present disclosure, there is provided a user device comprising a spectrometer module according to the first aspect.

Thus, a user device may make use of a very small spectrometer module and the spectrometer module may be combined with functionalities of other components in the user device.

The user device may be any type of device that may communicate with the spectrometer module and may comprise processing capability for processing spectral data recorded by the spectrometer module. Thus, the user device may for instance be a portable user device, such as a mobile phone, a digital camera, a laptop, a tablet PC, or a wearable user device, e.g. a smart watch. The user device may alternatively be a dedicated or general sensor unit, which may provide a plurality of sensors, including the spectrometer module, for making measurements. Such a sensor unit may for example be used in an industrial application, such as for performing measurements relevant to an industry process.

According to a third aspect of the present disclosure, there is provided a spectrometer module, comprising: at least one electronic circuit module, comprising a light sensitive area for detecting incident light of a plurality of wavelengths within a set wavelength interval; an illumination source for illuminating an object, wherein the light sensitive area is arranged to detect incident light which has interacted with the illuminated object; and wherein the spectrometer module further comprises a housing in which the illumination source and the at least one electronic circuit module are mounted, wherein the housing further includes a blocking element obstructing light from the illumination source from propagating within the housing to the light sensitive area.

The spectrometer module may thus be provided as a self-contained unit, the at least one electronic circuit module and the illumination source being arranged in a common housing. Having an illumination source may ensure that an object is illuminated with a desired spectral profile in order to facilitate specific analysis of the object.

The spectrometer module may further comprise a supplementary sensor, which is mounted in the housing and which is arranged to receive light propagating internally within the housing from the illumination source to the supplementary sensor.

The spectral profile and intensity of the illumination source may for example depend on ambient temperature, age of the illumination source, or whether manufacturing of the illumination source is able to meet an ideal profile. Thanks to using the supplementary sensor, the actual spectral profile provided by the illumination source may be detected and used in analysis of the recorded spectral data.

The housing may comprise at least one reflective surface for reflecting light from the illumination source to the supplementary sensor.

The spectrometer module may further comprise a processing unit, which is configured to automatically correct a spectrum recorded by the at least one electronic circuit module using characteristics of the illumination source as detected by the supplementary sensor.

The housing may further comprise a first aperture for allowing light from the illumination source to leave the housing in a direction towards the object, and a second aperture for allowing light from the object to pass into the housing in a direction towards the light sensitive area, wherein the first and second apertures face a common direction.

The first and second apertures may be arranged in a common side wall of the housing.

The spectrometer module may further comprise a printed circuit board on which both the illumination source and the at least one electronic circuit module are mounted.

The spectrometer module may further comprise an electronic interface which extends through a wall of the housing for allowing connection of the at least one electronic circuit module to components of a user device.

The housing may further comprise an outer physical interface facilitating mounting of the housing in a user device.

According to a fourth aspect of the present disclosure, there is provided a user device, wherein the spectrometer module according to the third aspect is arranged in the user device by mounting of the housing in the user device.

Thus, the spectrometer module may be arranged as a self-contained unit, including an illumination source and at least one electronic circuit module, in the user device. Hence, the spectrometer module may be easily connected to the user device for providing spectral data to the user device.

According to a fifth aspect of the present disclosure, there is provided a spectrometer module, comprising: at least one electronic circuit module comprising a light sensitive area for detecting incident light of a plurality of wavelengths within a set wavelength interval, wherein detected light of a plurality of wavelengths forms spectral data; and a memory storing predetermined correction data for correcting the spectral data detected by the light sensitive area.

By having a memory storing predetermined correction data, the spectrometer module may comprise information for ensuring that spectral data recorded by the spectrometer module is correctly interpreted.

The stored correction data may comprise a predetermined characteristic of the at least one electronic circuit module.

The predetermined characteristic may be any one of: a center wavelength of a wavelength band detected by a pixel in the light sensitive area; a wavelength width of a wavelength band detected by a pixel in the light sensitive area; the center wavelengths of a plurality of pixels in the light sensitive area; the center wavelength of a single pixel in the light sensitive area; and a transmission loss relevant for a pixel in the light sensitive area.

The spectrometer module may further comprise a processing unit, which is configured to adjust the spectral data using the stored correction data.

The spectrometer module may further comprise a combination module which is arranged to receive the spectral data and the stored correction data and to correct the wavelength information of the spectral data using the stored correction data.

The combination module may be arranged to adjust a detected intensity in the spectral data using a transmission loss stored in the memory.

The spectrometer module may be arranged to output corrected spectral data.

The spectrometer module may be arranged to output the spectral data combined with the stored correction data.

BRIEF DESCRIPTION OF THE DRAWINGS

The above, as well as additional objects, features and advantages of the present disclosure, will be better understood through the following illustrative and non-limiting detailed description of preferred embodiments of the present disclosure, with reference to the appended drawings. In the drawings like reference numerals will be used for like elements unless stated otherwise.

FIG. **1** is a schematic illustration of a spectrometer module.

FIG. **2** is a schematic illustration of a layout of electronic circuit modules of the spectrometer module of FIG. **1**.

FIG. **3** is a schematic illustration of a spectrometer module including an illumination source.

FIG. **4** is a schematic illustration of a user device including or supporting a spectrometer module.

FIG. **5** is a schematic illustration of a user device providing target assistance for a user.

FIG. **6** is a schematic illustration of a user device providing target assistance for a user.

DETAILED DESCRIPTION OF CERTAIN ILLUSTRATIVE EMBODIMENTS

Detailed embodiments of the present disclosure will now be described with reference to the drawings.

A spectrometer comprises a sensor, which is arranged to detect an intensity of light of different wavelengths. The spectrometer comprises an optical module for directing light from an object towards the sensor. Thus, the spectrometer is able to record spectral data, which may provide information about the object.

Referring now to FIG. **1**, a spectrometer module **10** will be described. The spectrometer module **10** comprises components enabling recording of spectral data of an object **12** allowing, for example, analysis of the object **12** based on the recorded spectral data.

The spectrometer module **10** may be a stand-alone unit, but may alternatively be mounted in or on another device. The device in or onto which the spectrometer module **10** is mounted will in the following be referred to as a user device **100**. The user device **100** may be any type of device that may communicate with the spectrometer module **10**. The user device **100** may also have processing capability for processing recorded spectral data.

The spectrometer module **10** may comprise an electronic circuit module **20**, which enables detecting incident light. The electronic circuit module **20** may comprise a light sensitive area **22**. The light sensitive area **22** comprises one or more light detectors **24**. A light detector **24** is arranged to capture light incident on the light detector **24**, for example by converting incident light to an electric charge.

The light sensitive area **22** may be formed as any type of light-detecting circuitry. For instance, a charge coupled device (CCD) image sensor or a complementary metal-oxide-semiconductor (CMOS) image sensor may be used. The light-detecting circuitry may be adapted to a range of wavelengths to be detected by the light detectors **24**. For instance, the light detectors **24** may use InGaAs, MCT or other detector substrates for detection of infrared light. Further, the light detectors **24** may be pixels of an image sensor.

The spectrometer module **10** may further comprise an optical module **40**, which is arranged in relation to the electronic circuit module **20** for directing light from an object **12** towards the light sensitive area **22**.

The spectrometer module **10** may be arranged to detect selected wavelengths of light that is incident on each light detector. In this regard, the electronic circuit module **20** may comprise at least one filter **26**, which is arranged on top of the light detector **24** for controlling a wavelength or band of wavelengths or a combination of bands of wavelengths of light that is allowed to pass through the filter **26** towards the light detector **24**. A plurality of filters **26** may be provided for controlling wavelengths of light that are allowed to pass towards respective light detectors **24**.

The plurality of filters **26** may constitute a filter bank having a plurality of wavelength-selective filters for controlling the wavelength of light incident on light detectors **24**.

In combination, the light detectors **24** may allow for spectral sensing or multi-spectral sensing as light of a number of wavelengths may be detected.

The light detectors **24** may be arranged to detect selected wavelengths within a spectrum of visible light. However, the light detectors **24** may alternatively, or additionally, be arranged to detect selected wavelengths within other ranges, such as ultraviolet light, near infrared light or infrared light.

The plurality of filters **26** may be integrated with the electronic circuit module **20** for providing a fixed relationship between the filters **26** and the light detectors **24**. The filters **26** may comprise Fabry-Perot structures (not shown) having two reflective surfaces on respective sides of a cavity, wherein a thickness of the cavity may determine a narrow wavelength band that is allowed to pass towards the light detectors **24**. The Fabry-Perot filters may be designed for 1st order to maximize the free spectral range or use higher order designs for multi-resonance filtering. Multi-cavity filters may be used for a wider full-width at half-maximum (FWHM) of the filter. Thus, by varying the thickness of the cavity on top of respective light detectors **24**, the light detectors **24** may be arranged to detect incident light of different wavelengths. Alternatively, other thin film based interference filter structures can be used, instead of or together with the Fabry-Perot filters.

Alternatively, the spectrometer module **10** may comprise separate filters, which are mounted in relation to the electronic circuit module **20** such that a relationship between the filters and the light detectors **24** is fixed. Thus, the filters need not necessarily be integrated with the electronic circuit module **20**.

The spectrometer module **10** may comprise a dispersive element, such as a grating, which is arranged to direct different wavelengths of light into slightly different directions. Thus, a mounting of the dispersive element in relation to the light detectors **24** may control which wavelength of light is directed towards the respective light detectors **24**.

The light sensitive area **22** of the electronic circuit module **20** may comprise a plurality of light detectors **24**. Each light detector **24** may be arranged to detect light of a selected wavelength, for example by arrangement of the light detector **24** in relation to a filter **26** as described above. The plurality of light detectors **24** may comprise a set of light detectors **24** that detect the same selected wavelength. The set of light detectors **24** may further be distributed over the light sensitive area **22**, such that the light detectors **24** within a set are not adjacent to each other.

This implies that the plurality of light detectors **24** within a set may have slightly different relationships to the optical module **40** of the spectrometer module **10**. This may be used in several ways for handling that the information about an object **12** as detected by the light detectors **24** may not be fully reliable.

For instance, the different light detectors **24** within a set may detect light that originates from different portions of the object **12**. Thus, if there is a spatial inhomogeneity of the object **12**, such as local artifacts of the object **12**, the plurality of light detectors **24** within the set may ensure that the inhomogeneity does not affect analysis of the object **12**.

Also, an angle of incident light may affect detected light. For instance, the selected wavelength that is passed through the filter **26** towards the light detector **24** may depend on the angle. The plurality of light detectors **24** may have varying angular relationship to the optical module **40** and, hence, to the object **12** that is to be analyzed. Thus, if the spectrometer module **10** is arranged at a non-optimal angle in relation to the object **12**, effects of the non-optimal angle may be

diminished by using the fact that the plurality of light detectors **24** receive incident light at different angles.

This arrangement of the set of a plurality of light detectors **24** on the light sensitive area **22** is particularly advantageous for a spectrometer module **10**, which is to be used in a handheld device, as an angular relation to the object **12** may not be very accurately controlled during recording of spectral data.

The plurality of light detectors **24** in the light sensitive area **22** may be arranged in a pattern, which is repeated on the light sensitive area **22**. Each light detector **24** in the pattern may be arranged to detect incident light of a unique selected wavelength. Thus, the pattern may be arranged to record spectral data, whereas the repeating of the pattern implies that sets of plurality of light detectors **24** are formed having a plurality of light detectors **24** arranged to detect the same selected wavelength and distributed over the light sensitive area **22**.

The light detectors within a single pattern on the light sensitive area **22**, may detect incident light of different wavelengths from a common spatial portion of the object **12**. Thus, repeating the pattern may allow recording spectral data from a plurality of spatial portions of the object **12**.

The single pattern may include at least 8 different light detectors **24** in order to detect incident light of 8 unique selected wavelength bands. However, in other variations, the single pattern may include at least 32 different light detectors **24**, or 64 different light detectors **24**.

In some applications, the single pattern may include fewer light detectors **24**, such as 4 different light detectors **24**. The unique selected wavelengths may be selected for enabling detection of particular information, such as presence of a specific substance in the object **12**. For such applications, it may be sufficient to detect light of only a few, but specifically selected and narrow-banded (less than 30 nm FWHM), selected wavelengths, such as 4 different wavelengths or even only 2 different wavelengths.

The light detectors **24** in the pattern may be arranged in a rectangular portion of the light sensitive area **22** in order to have a compact arrangement of the pattern on the light sensitive area **22**. This may allow the light detectors **24** within the pattern to receive light from a common portion of the object **12**.

The spectrometer module **10** may further comprise a rejection filter **28**. The rejection filter **28** may be arranged to only allow wavelengths of light within a specific wavelength interval to pass through the rejection filter **28**. This wavelength interval will be matched to the wavelengths of the wavelength bands sensed by the light detectors **24**. The rejection filter **28** may thus be arranged to filter out wavelengths that may otherwise interfere with the detection of selected wavelengths in the light detectors **24**.

For instance, a filter **26** having a Fabry-Perot structure will pass several orders of wavelengths. Thus, if the light detector **24** is supposed to detect a wavelength of 400 nm, light having a wavelength of 800 nm may interfere with the detection. Further, a plurality of filters **26** of the electronic circuit module **20** may provide wavelength-selective filters of a wavelength interval within a sensitivity range of the light detectors **24**. Thus, even if a filter **26** within the plurality of filters **26** filters a specific wavelength in the wavelength interval, the filter may still pass light having wavelengths outside the wavelength interval but within the sensitivity range of the light detectors **24**. Thus, the rejection filter **28** may pass only light within the wavelength interval in which the plurality of filters **26** operate.

Thus, the light detectors **24** of an electronic circuit module **20** may be arranged to together detect light having wavelengths within a selected interval. The rejection filter **28** may then be arranged to pass only wavelengths of light within the selected interval.

The rejection filter **28** may be formed in a glass substrate, which has a coating for passing only wavelengths within the selected interval. The glass substrate may be bonded to the electronic circuit module **20** on top of the filters **26**.

As an alternative, the rejection filter **28** may be mounted in the spectrometer module **10**, but not necessarily fixed to the electronic circuit module **20**.

As another alternative, separate rejection filters **28** may be arranged on top of different light detectors **24** and their respective filters **26** on the electronic circuit module **20**.

As another alternative, the rejection filters **28** can be deposited and may be patterned directly on top of the filters **26** that are in their turn on top of the electronic circuit module **20**.

As another alternative, the rejection filters **28** can make use of traditional RGB absorption filters or other post-processed absorption based filters. These absorption based filters may be used in combination with interference filters.

The electronic circuit module **20** may further comprise control circuitry **30** for controlling functionality of the spectrometer module **10**. The control circuitry **30** may comprise circuitry for reading out detections of incident light made by the light detectors **24** and converting the read out detections to digital values in order to form spectral data. The control circuitry **30** may further comprise circuitry for performing initial processing of recorded spectral data and for transferring the initially processed spectral data to other units within or outside the spectrometer module **10**.

The electronic circuit module **20** may be an integrated circuit which is arranged on a die **32**. The logic controlling the functions of the electronic circuit module **20** may implemented in an Application-Specific Integrated Circuit (ASIC) on the die **32**. Alternatively, the logic may be implemented as another type of integrated circuit, such as a Field-Programmable Gate Array (FPGA) on the die **32**.

The light sensitive area **22** and the control circuitry **30** for controlling the light sensitive area **22** may be formed as any type of light-detecting circuitry. For instance, a charge coupled device (CCD) image sensor or a complementary metal-oxide-semiconductor (CMOS) image sensor may be used. The light-detecting circuitry may be adapted to a range of wavelengths to be detected by the light detectors **24**. For instance, the light detectors **24** may use InGaAs, MCT or other IR-sensitive sensor types, for detection of infrared light. Further, the light detectors **24** may be pixels of an image sensor.

The electronic circuit modules **20** may be manufactured by means of forming the necessary circuitry on a semiconductor wafer. The filters **26** may be formed on the light sensitive area **22** through depositing of necessary layers on the wafer.

Different rejection filters **28** may also be formed on top of respective light detectors **24** to provide specially adapted rejection filters **28** on top of each light detector. The rejection filters **28** may then be provided as coating layers having appropriate characteristics for only passing wavelengths of within a selected interval.

As an alternative, the rejection filter **28** may be integrated on a glass substrate. The glass substrate may be provided with a coating for passing only wavelengths within the selected interval.

The spectrometer module **10** may comprise a plurality of separate electronic circuit modules **20**. The separate electronic circuit modules **20** may each be formed on a separate die **32**.

The dies **32** may be mounted close to each other in the spectrometer module **10**. For instance, a spatial gap between adjacent dies **32** may be smaller than 500 μm, or even smaller than 100 μm. The placement of dies **32** close to each other facilitates that an optical module **40**, which is common to the plurality of electronic circuit modules **20** may be used. The common optical module **40** may thus direct light from the object **12** towards the light sensitive areas **22** of all of the plurality of electronic circuit modules **20**.

Each of the electronic circuit modules **20** may comprise an integrated sensor circuit including a light sensitive area **22** that occupies part of an area of the integrated sensor circuit. Further, the plurality of separate electronic circuit modules **20** may include a group of adjacent electronic circuit modules **20** mounted in the spectrometer module **10** and the light sensitive areas **22** of the electronic circuit modules **20** in the group are so arranged on the respective integrated sensor circuits that the group of adjacent electronic circuit modules **20** is mounted so that the light sensitive areas **22** of the adjacent electronic circuit modules **20** are arranged in vicinity of each other.

As illustrated in FIG. **2**, the light sensitive area **22** may be arranged at an edge portion **34** of the integrated sensor circuit.

Hence, by arranging the light sensitive area **22** in a particular area of the integrated sensor circuit and specifically at the edge portion **34**, it is possible to mount adjacent electronic circuit modules **20** in such a relationship that the light sensitive areas **22** become closely arranged in the spectrometer module **10**. This arrangement further facilitates having an optical module **40** that is common to the plurality of separate electronic circuit modules **20**.

According to an alternative, the group of adjacent electronic circuit modules **20** are mounted in a three-dimensional stack. Thus, depending on where an electronic circuit module **20** is arranged in the stack, the light sensitive areas **22** may be arranged at a portion of the respective integrated circuit such that the light sensitive areas **22** of adjacent electronic circuit modules **20** in the stack are arranged close to each other.

The plurality of electronic circuit modules **20** may be arranged to detect incident light of different wavelengths. By having separate electronic circuit modules **20**, for example formed on separate dies **32**, manufacture of each electronic circuit module **20** may be adapted to the specific requirements associated with the wavelengths of light to be detected by each respective electronic circuit module **20**.

Each of the electronic circuit modules **20** may be arranged to detect incident light of a single wavelength, possibly using a plurality of light detectors **24**. The spectrometer module **10** may still be arranged to detect a plurality of wavelengths allowing at least some specially adapted analyses to be made of objects **12** based on the recorded spectral data.

However, advantageously, each electronic circuit module **20** may comprise a plurality of light detectors **24**, which are arranged to detect incident light of different wavelengths. The light detectors **24** together may detect light within a wavelength interval. The plurality of electronic circuit module **20** may then be arranged to detect light within different wavelength intervals. These wavelength intervals may (partially) overlap.

For instance, a first electronic circuit module **20***a* may be arranged to detect light within a wavelength interval of 200-400 nm, a second electronic circuit module **20***b* may be arranged to detect light within a wavelength interval of 400-600 nm, a third electronic circuit module **20***c* may be arranged to detect light within a wavelength interval of 600-800 nm, and a fourth electronic circuit module **20***d* may be arranged to detect light within a wavelength interval of 800-1000 nm. Within each of these wavelength intervals, the light detectors **24** of the electronic circuit modules **20***a-d* may be arranged to detect incident light of specific wavelengths. It should be noted that these wavelength intervals merely are intended to serve as examples and that other wavelength intervals are equally possible. Furthermore, it is even possible that some wavelength intervals overlap partially or completely.

The electronic circuit modules **20***a-d* may be configured in accordance with a wavelength interval that is to be detected by the light detectors **24**. Thus, the spectrometer module **10** may for instance comprise an electronic circuit module **20***b* comprising a CMOS image sensor adapted to detect visible light and an electronic circuit module **20***d* comprising an InGaAs or chip for detecting infrared light.

By allowing manufacture of the electronic circuit modules **20***a-d* to be performed separately, manufacture of a spectrometer module **10** spanning a broad wavelength range is facilitated.

The light sensitive area **22** may be arranged in a corner of the electronic circuit module **20**. This allows mounting of four electronic circuit modules **20** in a 2×2 arrangement, wherein the light sensitive areas **22** are arranged in the vicinity of each other at a center of the arrangement.

The light sensitive area **22** may be arranged along a side of the electronic circuit module **20**. This allows mounting of two electronic circuit modules **20** in a side-by-side arrangement with the light sensitive areas **22** along the side closest to the adjacent electronic circuit module **20**.

It should be realized that other mounting arrangements of the electronic circuit modules **20** may be contemplated. For instance, three electronic circuit modules **20** may be mounted in a triangular arrangement with the light sensitive area **22** of one electronic circuit module **20** being arranged along a bottom side of the electronic circuit module **20** and the light sensitive areas **22** of the two other electronic circuit modules **20** being arranged along a top side of the electronic circuit module **20**.

The plurality of electronic circuit modules **20** may be mounted on a common substrate. For instance, the electronic circuit modules **20** may be mounted on a common PCB or a common chip, on which the spectral data recorded from each of the electronic circuit modules **20** may be combined.

The plurality of electronic circuit modules **20** may be mounted in a common plane. The light sensitive areas **22** may thus be arranged in a common sensor plane, which may be a focal plane of the optical module **40** that is common to the plurality of electronic circuit modules **20**.

The spectrometer module **10** may be arranged to detect a number of unique selected wavelengths, which may be selected in order to enable specific analysis of the spectral data. For instance, the wavelengths may be selected in such a way as to enable analysis or simple detection of a specific substance, anomaly or quality parameter. The number of unique selected wavelengths may be very few, such as only two, three or four wavelengths. However, a larger number of unique selected wavelengths may be used, such as 10, 20 or even 100 wavelengths.

Each of the separate electronic circuit modules **20** may be arranged to detect light of a single wavelength or a few wavelengths. A plurality of light detectors **24** of each electronic circuit module **20** may thus be used for providing a processed reading (for example an average, weighted average, median or other) of detected light of the specific wavelength(s) detected by the electronic circuit module **20**, for example over a region of the object **12**, or for relating the spectral data to different points on the object **12**.

One example of using the spectrometer module **10** is within (pulse) oximetry or oxygenation monitoring, wherein a saturation of blood is related to a ratio or combinatorial processing of spectral intensities measured. Thus, by measuring light of the specific wavelengths appropriate for performing pulse oximetry, a saturation of blood may be determined.

Alternatively, this approach can be used for food (meat, fish) quality/freshness detection or even for vegetable freshness (chlorophyll measurement instead of oxygenation).

The spectrometer module **10** may further comprise a memory **50**. The memory **50** may be arranged as part of the electronic circuit module **20** or as part of one of the electronic circuit modules **20** if a plurality of electronic circuit modules **20** are used. Alternatively, the memory **50** may be arranged for example on a PCB or a chip, to which the electronic circuit module(s) **20** may also be connected, or in a three-dimensional stack of dies.

The memory **50** may store predetermined correction data. The correction data may be used for correcting the spectral data recorded by the electronic circuit module **20**.

The predetermined correction data may be used for correcting variations arising during manufacture of the spectrometer module **10**. For instance, the filters **26** may not be perfectly formed and/or perfectly aligned with the light detectors **24**. This implies that the light detectors **24** may detect light of a different wavelength than intended. The predetermined correction data may thus store a predetermined characteristic that allows correcting the wavelength detected by each light detector **24**.

The predetermined correction data may also or alternatively be used for calibrating the recorded spectral data to sensitivities of the respective light detectors **24** or efficiency of the filter **26** on top of respective light detectors **24**. Thus, the predetermined correction data may include a transmission efficiency of the light detectors **24** for correlating the detected light to the light that is actually incident on the filter **26**.

The correcting of the recorded spectral data will be further described below.

The memory **50** may also store other information that is relevant to the spectrometer module **10**. The memory **50** may store metadata which should be output together with the recorded spectral data. Such metadata may be an identifier of the spectrometer module **10**, which may be a unique number for uniquely identifying the spectrometer module **10** that has recorded the spectral data.

The memory **50** may also store programs, which may be launched into a processing unit of the spectrometer module **10** on start-up of the spectrometer module **10** for controlling functionality of the spectrometer module **10**.

The memory **50** may be a non-volatile memory, such as a read-only memory (ROM), an electrically erasable programmable read-only memory (EEPROM), or a flash memory. The memory **50** may be arranged to not lose data even if the spectrometer module **10** is turned off.

During manufacture of the spectrometer module **10**, the spectrometer module **10** may be tested in order to obtain correction data that may be necessary for correcting recorded spectral data. This predetermined correction data may then be stored in the memory **50** before the spectrometer module **10** is shipped from manufacture.

The optical module **40** may be arranged in front of the one or more electronic circuit modules **20** for allowing light to pass into the spectrometer module **10** towards the light sensitive area(s) **22** of the one or more electronic circuit modules **20**.

In its simplest form, the optical module **40** may comprise an aperture, defining an entrance hole for receiving light into the spectrometer module **10**. The optical module **40** may in one variation form an optical window, an aperture or a pinhole, wherein the light sensitive area(s) **22** form an image plane receiving light from the object **12**.

However, the optical module **40** may comprise one or more lenses and/or lens systems, apertures, baffles, field-stops, pinholes and/or pinhole arrays for controlling how light from an object **12** passes through the optical module **40** and is directed towards the light sensitive area(s) **22**.

The optical module **40** may be arranged to control that light from a restricted part of the object **12** is directed to the light sensitive area(s) **22**. Thus, an isolation of a spatial area that is analyzed by the spectrometer module **10** may be achieved by means of the optical module **40**.

The optical module **40** may be arranged to control that different parts of the light sensitive area(s) **22** receive light from a common part of the object **12**. Thus, the recorded spectral data may correspond to the same spatial area, such that the detected incident light of different wavelengths originate from a common part of the object **12**. This implies that the optical module **40** may achieve homogenization of the part of the object **12** that is analyzed by different parts of the light sensitive area(s) **22**.

Further, the wavelength selected by a filter **26** may depend on an angle of incidence of light onto the filter **26**. Thus, in order for the desired selected wavelength to be passed through the filter **26**, the optical module **40** may control light to incident onto the filter **26** substantially perpendicularly to a filter surface, or according to another desired angle. This implies that the optical module **40** may control angularity of light incident onto the light sensitive area(s) **22** or filters on top of the light sensitive area(s) **22**.

The optical module **40** may have a static set-up which is adapted to the spectrometer module **10** recording spectral data in specific conditions. For instance, the spectrometer module **10** may be arranged to record spectral data of an object **12** that is to be placed at a specific distance from the spectrometer module **10**. Then, a static set-up of the optical module **40** may optimize recording of spectral data at this specific distance. The static set-up may for instance provide an object **12** at the specific distance to be focused onto a focal plane of the optical module **40**, and the light sensitive area(s) **22** may be placed in the focal plane.

The optical module **40** may comprise one or more components that may be actively controlled. For instance, an active lens may be controlled for changing focus of the optical module **40** or an aperture size may be controlled for changing a sampled area at a given distance from the spectrometer module **10**. The optical module **40** may thus be dynamically controlled in order to adapt to conditions at which spectral data is to be recorded.

The optical module **40** may be arranged to be adapted to a set of finite number of conditions for recording spectral data. Thus, the optical module **40** may be controlled to switch characteristics, such as focus of the optical module **40**, to optimize recording of spectral data in specific condi-

tions within the finite number of conditions. For instance, the optical module **40** may switch between a set-up for contact measurement, where the spectrometer module **10** is in contact or very close proximity to the object **12**, a set-up for short-distance measurement, where the spectrometer module **10** is at a short distance, for example 10 cm, from the object **12**, and a set-up for long-distance measurement, where the spectrometer module **10** is at a longer distance, for example 5 m, from the object **12**.

The optical module **40** may comprise specific coatings or materials to avoid reflections within the optical module **40**. The optical module **40** may for example comprise anti-reflection coatings on components, such as lenses. The optical module **40** may also comprise one or more rejection filters for preventing light of undesired wavelengths to pass through the optical module **40**.

As mentioned above, the optical module **40** may be common to light sensitive areas **22** of a plurality of electronic circuit modules **20**. This implies that the optical module **40** may define a single optical pathway through the optical module **40** towards the light sensitive areas **22**. For instance, an entrance aperture of the optical module **40** may be common to the light sensitive areas **22** for allowing light from the object **12** to enter the optical module **40** and to passed to the light sensitive areas **22**.

With reference to FIG. **3**, the spectrometer module **10** may comprise an illumination source **60**. The illumination source **60** may provide illumination of the object **12** with a desired spectral profile, which may improve possibilities to analyze the spectral data recorded.

The spectrometer module **10** need not necessarily comprise an illumination source **60**. In many applications, the spectrometer module **10** may record spectral data based on an object that is illuminated by ambient light. Also, the illumination source **60** may not be arranged in the spectrometer module **10**, but the spectrometer module **10** and the illumination source **60** may be arranged in a common user device **100**.

However, when the spectrometer module **10** comprises the illumination source **60**, a controlled relation between the illumination source **60** and the light sensitive area(s) **22** may be obtained. The light sensitive area **22** may be arranged to detect incident light that has interacted with the illuminated object **12**.

The illumination source **60** may for instance be an incandescent light, a light emitting diode (LED) source or a laser source, such as a vertical-cavity surface-emitting laser (VCSEL). The illumination source **60** may illuminate the object **12** with a specific spectral profile that facilitates analysis of the object **12**. The illumination source **60** may be controlled such that the spectral profile provided by the illumination source **60** may be changed.

The light from the illumination source **60** may interact with the object **12**. Thus, the light may be for example diffusely or specularly reflected from the object **12**, absorbed by the object **12**, transmitted through the object **12** or scattered by the object **12**. The recorded spectral data may then be analyzed based on, for example, absorbance of different wavelengths, which may for instance allow determination of whether a compound is present in the object **12**.

The interaction of light with the object **12** may alternatively or additionally cause a shift in wavelength of the light, for example through florescence, Raman scattering or scattering by a moving object **12**. The recorded spectral data may thus also or alternatively be analyzed to identify wavelength shifts, which may for instance allow determination of speed of a moving object **12** or determination of whether a compound is present in the object **12**.

The spectrometer module **10** may comprise a plurality of illumination sources **60**. Thus, the spectral profile of the illumination to be provided may be controlled, for example by selecting which of a plurality of illumination sources **60** to be used. Also, the plurality of illumination sources **60** may together create a desired spectral profile of illumination.

The memory **50** may be provided with information defining the spectral profile of the illumination source **60**. Further, the memory **50** may be provided with information defining the spectral profile of each of a plurality of illumination sources **60**, such that when a specific illumination source **60** of the plurality of illumination sources **60** is selected, the spectral profile of the selected illumination source **60** may be retrieved from the memory **50**.

The spectrometer module **10** may further comprise a supplementary sensor **62**. The supplementary sensor **62** may be arranged to receive light from the illumination source **60** in order to detect a spectral profile that is provided by the illumination source **60**.

The spectral profile and intensity of the illumination source **60** may for example depend on ambient temperature, age of the illumination source **60**, or whether manufacturing of the illumination source **60** is able to meet an ideal profile. Thanks to using the supplementary sensor **62**, the actual spectral profile provided by the illumination source **60** may be detected and used in analysis of the recorded spectral data.

Also, the supplementary sensor **62** may detect the spectral profile of a selected illumination source **60** from a plurality of illumination sources **60**, such that the spectral profile used in illuminating the object **12** through controlling of which of the plurality of illumination sources **60** may be detected.

The supplementary sensor **62** may be mounted within the spectrometer module **10** such that light from the illumination source **60** propagates within the spectrometer module **10** to the supplementary sensor **62**. Thus, the light emitted by the illumination source **60** is not affected by an ambience of the spectrometer module **10** before reaching the supplementary sensor **62**. This ensures that the detected spectral profile by the supplementary sensor **62** is reliable.

The spectrometer module **10** may comprise a reflective surface **64**, which may reflect light from the illumination source **60** to the supplementary sensor **62**. This implies that a freedom of placing the supplementary sensor **62** in relation to the illumination source **60** is provided, which facilitates design of the spectrometer module **10**. For instance, the reflective surface **64** allows arranging the supplementary sensor **62** in a common plane with the illumination source **60**.

The spectrometer module **10** may comprise a housing **70**, in which components of the spectrometer module **10** are mounted. The housing **70** may provide an outer cover of the spectrometer module **10**, which may protect components within the spectrometer module **10** from, for example, dust or any other external factors that may otherwise influence a functionality of the spectrometer module **10**.

The housing **70** of the spectrometer module **10** may thus facilitate transport of the spectrometer module **10** as a self-contained unit, for example from a manufacturing site to a site where the spectrometer module **10** is to be mounted in a user device **100**. The housing **70** may also provide a defined simple shape of the spectrometer module **10**, for example a rectangular parallelepiped, which may be simple to mount.

The housing **70** may also be provided with an outer physical interface, which may facilitate mounting the spectrometer module **10** onto a user device **100**. The outer physical interface may e.g. comprise a flange or a protruding element so as to provide a surface that may be physically connected to a user device **100**.

The housing **70** may for example be formed of a plastic material, which may be easily molded to the desired shape. The housing may for instance be formed as a rectangular parallelepiped, which may be easily mounted in or on a user device **100**.

The electronic circuit module **20** or the plurality of electronic circuit modules **20** may be mounted in the housing **70**. Also, the illumination source **60** and the supplementary sensor **62** may be mounted in the housing **70**. The electronic circuit module(s) **20**, the illumination source **60** and the supplementary sensor **62** may be mounted in a common plane, which may enable the housing **70** to have a simple structure, such as a rectangular parallelepiped.

The housing **70** may be provided with a bottom structure, on which components of the housing **70** may be mounted. For instance, the electronic circuit component(s) **20**, the illumination source **60** and the supplementary sensor **62** may be mounted on the bottom structure, which may be a bottom wall of the housing **70**. The electronic circuit module(s) **20**, the illumination source **60** and the supplementary sensor **62** may be mounted on a common PCB **80**, which may be arranged on the bottom wall of the housing **70**.

The housing **70** may further comprise side walls. The housing **70** may be provided with the bottom structure and side walls before mounting of components, such as the electronic circuit component(s) **20**, the illumination source **60** and the supplementary sensor **62** in the housing **70**. When the components have been mounted, a lid may be arranged on top of the side walls in order to seal the housing **70**.

The housing **70** may further comprise a blocking element **72**, which is arranged to obstruct light from the illumination source **60** to propagate within the housing **70** from the illumination source **60** to the light sensitive area(s) **22**. Thus, the illumination source **60** may be mounted within the same housing **70** as the electronic circuit module(s) **20**, without light from the illumination source **60** interfering with the light from the object **12** detected by the light sensitive area(s) **22**. The blocking element **72** may for instance comprise a partition wall and/or baffles between the illumination source **60** and the electronic circuit module(s) **20**.

The reflective surface **64** may be arranged on an inner wall of the housing **70** for reflecting light from the illumination source **60** to the supplementary sensor **62**. An inner wall of the housing **70** may thus be provided at least partly with a coating, which reflects light. Alternatively, a reflective surface **64** may be mounted on the inner wall.

The housing **70** may be provided with a first aperture **74** for allowing light from the illumination source **60** to escape the housing **70** in a direction towards the object **12**. The housing **70** may further comprise a second aperture **76** for allowing light that has interacted with the object **12** to pass into the housing **70** towards the light sensitive area(s) **22**.

The first and second apertures **74**, **76** may face a common direction. For instance, the first and second apertures **74**, **76** may be arranged in a common side wall of the housing **70**.

The first and second apertures **74**, **76** may be arranged in such manner that an illumination cone formed by light emitted from the illumination source **60** and escaping the housing **70** through the first aperture **74** overlaps a field of view of the light sensitive area(s) **22** through the second aperture **76**. Thus, an object **12** in the field of view will be illuminated by the illumination source **60**.

An optical axis of an optical system for recording the spectral data may also be angled, i.e. non-parallel, in relation to an optical axis of the illumination cone. This may help to ensure that the illumination cone overlaps the field of view of the light sensitive area(s) **22**. The optical axis of the optical system may be angled in relation to the illumination cone by means of mounting the electronic circuit module(s) **20** in a plane, in which the illumination source **60** is not mounted, and arranging the optics module **40** in front of the plane in which the electronic circuit module(s) **20** are mounted. However, according to an alternative, the light from the object **12** is re-directed towards the electronic circuit module(s) **20**, for example by means of components of the optics module **40**, such that the electronic circuit module(s) **20** and the illumination source **60** may be mounted in a common plane.

The first and second apertures **74**, **76** may be adapted to provide illumination of an object **12** when the object **12** is at a distance from the spectrometer module **10** at which the optical module **40** of the spectrometer module **10** is optimized for directing light from the object **12** towards the light sensitive area(s) **22**.

The optical module **40** may be mounted in the second aperture **76** of the housing **70** for directing light from the object **12** towards the light sensitive area(s) **22**.

The first aperture **74** may be provided with a transparent material, such as a transparent plastic or glass, for allowing light to escape the housing **70**, while preventing e.g. dust to enter the housing **70**. The first aperture **74** may additionally or alternatively be provided with an optical element for controlling the shape of the illumination cone emitted via the first aperture **74**.

The housing **70** may be provided with a single aperture, which is shared by the illumination source **60** for passing light from the illumination source **60** towards the object **12** and the light sensitive area(s) **22** for receiving light from the object **12**. In this case, it may be particularly important that a part of the aperture through which light is passed from the illumination source **60** towards the object **12** is provided with an anti-reflection coating so as to prevent light from being reflected in the aperture towards the light sensitive area(s) **22**.

The spectrometer module **10** may further comprise an electronic interface. The housing **70** may be provided with a plug connection for allowing connecting electronic components mounted in the housing **70** to an external unit.

For instance, the spectrometer module **10** may be powered through the electronic interface. Also, the electronic interface may allow communication of information to and from components of the spectrometer module **10**.

The electronic interface may comprise a single connection through a wall of the housing **70**. Alternatively, two connections may be provided for powering the spectrometer module and communicating with the spectrometer module **10**, respectively. Alternatively, the spectrometer module could be fully wireless, using wireless powering (inductive powering or charging or similar) and communication.

A simple electronic interface facilitates connecting the spectrometer module **10** to a user device **100**. The spectrometer module **10** may thus be mounted on the user device **100** by physically connecting the spectrometer module **10** using the physical interface and electrically connecting the spectrometer module **10** using the electronic interface.

The spectrometer module **10** may comprise a common carrier, such as a PCB, on which all electronic components,

such as the electronic circuit component(s) **20**, the illumination source **60** and the supplementary sensor **62**, of the spectrometer module **10** are mounted.

The electronic interface may provide a connection to the common carrier and communication between an external unit and the electronic components may be performed via the common carrier.

The spectrometer module **10** may comprise a communication unit for wireless communication. In such a case, the electronic interface of the spectrometer module **10** may only provide powering of the spectrometer module **10**. However, the spectrometer module **10** may also be arranged to communicate with external units using both wired and wireless communication.

As schematically illustrated in FIGS. **1** and **3**, the spectrometer module **10** may further comprise a processing unit **90**. The processing unit **90** may be a microprocessor, which may be programmable for controlling operation of the microprocessor. For instance, the processing unit **90** may be a central processing unit (CPU).

The processing unit **90** may be arranged on a common PCB, on which also the electronic circuit component(s) **20**, the illumination source **60** and the supplementary sensor **62** are mounted. The processing unit **90** may thus communicate with the electronic circuit component(s) **20**, the illumination source **60** and the supplementary sensor **62** through connections on the common PCB. As an alternative, the processing unit **90**, the electronic circuit component(s) **20**, the illumination source **60** and the supplementary sensor **62** may all be mounted on a common chip, e.g. forming a system on a chip.

The processing unit **90** may alternatively be a special-purpose circuitry for providing only specific logical operations. Thus, the processing unit **90** may be provided in the form of an ASIC, ASIP or FPGA.

The processing unit **90** may include a communication unit for communicating with an external unit. Alternatively, the communication unit may be a separate unit, which may also be mounted on a same PCB or same chip as the processing unit **90**.

The communication unit may be arranged to communicate with an external unit through a wireless communication. In such case, the communication unit may comprise an antenna for sending and receiving wireless signals, e.g. by means of radio frequency electromagnetic radiation.

The communication unit may also or alternatively be arranged to communicate through a wired connection, as may be provided by means of the electronic interface described above.

The processing unit **90** may be arranged to control output from the spectrometer module **10**. Thus, the processing unit **90** may receive recorded spectral data from the electronic circuit module(s) **20**. The processing unit **90** may then arrange the recorded spectral data into a data package, e.g. with header information, which may be suitable for communication to an external unit. The data package may be suited for transfer on a computer network, such that the recorded spectral data may be transmitted from the spectrometer module **10**, possibly via one or more intermediate external units to any computer in, for example, a local area network (LAN) or connected to Internet.

The processing unit **90** may process the recorded spectral data before outputting data from the spectrometer module **10**. This may allow at least partial analysis of the recorded spectral data to be performed in the spectrometer module **10**. For instance, the processing unit **90** may compare the recorded spectral data to a stored spectrum to output a decision based on the result of the comparison. The processing unit **90** may also or alternatively correct or process the recorded spectral data in accordance with correction data stored in the memory **50**.

The processing unit **90** may control the functionality of the spectrometer module **10**, outputting recorded spectral data on a specific electronic interface. Thus, the spectrometer module **10** may be easily embedded in a user device **100** or integrated into a system, as the spectrometer module **10** may be self-controlled and outputs recorded spectral data or at least partly processed data allowing another unit in the user device **100** to perform analysis on the recorded spectral data.

The data package output from the spectrometer module **10** may include recorded spectral data. Alternatively or additionally, the processing unit **90** may process the recorded spectral data as further described below. The spectrometer module **10** may then output the recorded spectral data with the processed data or, alternatively, only the processed data may be output. The processing of the recorded spectral data by the processing unit **90** may constitute initial steps for refining the recorded spectral data or a full analysis of the recorded spectral data or something in between.

However, the data package may further include other information, which may be useful, for instance, for analysis of the recorded spectral data.

The other information may constitute metadata relating to the recorded spectral data. For instance, the metadata could include an identifier of the spectrometer module **10** that recorded the spectral data, as may be stored in the memory **50**.

The metadata could also include a date and time at which the spectral data was recorded.

The spectrometer module **10** may further comprise other sensors and information captured by such other sensors may be included as metadata. For instance, a geographical position of the spectrometer module **10** when recording the spectral data may be included in the data package as metadata.

Information of the spectral profile of the illumination source **60** as recorded by the supplementary sensor **62** may be included in the data package as metadata.

The metadata may further comprise information relevant for processing the recorded spectral data. For instance, the memory **50** may store correction data as described above. This correction data may be included in the data package as metadata.

If the processing unit **90** is arranged to analyze the recorded spectral data, the spectrometer module **10** may output a result of the analysis. For instance, the memory **50** may store spectral signature information of a target compound. The processing unit **90** may thus compare the recorded spectral data against the stored spectral signature information to determine whether the object **12** includes the target compound. Then, the spectrometer module **10** may simply output a positive or negative result based on the analysis.

The recorded spectral data may be processed for refining the recorded spectral data. The refining of the recorded spectral data may correct or adjust the recorded spectral data to conditions under which the spectral data is recorded, or in view of characteristics of the spectrometer module **10**.

If the plurality of light detectors **24** comprises a set of light detectors **24** that detect the same selected wavelength, which set of light detectors **24** is distributed over the light sensitive area **22**, this may be used for refining the recorded spectral data. The different light detectors **24** in the set may receive light from slightly different parts of the object **12**.

Thus, in order to compensate for an artefact in the object **12**, a correction algorithm may be applied to the detected light in the light detectors **24** in the set. For instance, an average of the detected light in the light detectors **24** in the set may be calculated and used as a measurement of the detected light of the wavelength to which the set is sensitive. Thus, the effect of a local artefact, which may affect the detected light in one or a few of the light detectors **24** in the set may be diminished.

The recorded spectral data may also or alternatively be processed using correction data. The correction data may be stored in the memory **50** of the spectrometer module **10** as described above, but may alternatively be stored in a memory of an external unit to which the recorded spectral data is transmitted. If the external unit receives spectral data from a plurality of spectrometer modules **10**, the correction data may be stored in association with an identifier of the spectrometer module **10**.

The stored correction data may comprise one or more predetermined characteristics of the electronic circuit module(s) **20**.

For instance, the electronic circuit module **20** may not be arranged to determine light of the intended wavelength, for example due to a manufacturing process not being perfect. Thus, the stored correction data may comprise a predetermined characteristic for adjusting the recorded spectral data to the wavelength that is actually detected.

The predetermined characteristic may comprise a center wavelength of a wavelength band that is detected by a light detector **24**. The predetermined characteristic may further comprise center wavelengths for a plurality of light detectors **24** or even all light detectors **24**. Thus, the wavelengths detected by the light detectors **24** may be known through the predetermined characteristic. The predetermined characteristic may also comprise an offset and slope, with regard to nominal design.

The width of the wavelength band that is detected by the light detectors **24** may be constant even if the center wavelengths are not correctly achieved during manufacture of the spectrometer module **10**. Thus, storing the center wavelength may be sufficient for knowing the wavelength band that is detected by the light detector **24**.

However, the predetermined characteristic may also comprise a width of the wavelength band that is detected by the light detector **24**, so that the wavelength band is known by the center wavelength and the width of the wavelength band. The predetermined characteristic may comprise the widths of the wavelength bands for a plurality of light detectors **24** or even all light detectors **24**.

Instead of the center wavelength and the width of the wavelength band, the predetermined characteristic may comprise a smallest wavelength and largest wavelength of the wavelength band that is detected by the light detector **24**.

The light detectors **24** may be intended to detect light of selected wavelengths. The predetermined characteristic need not necessarily define the wavelength band detected by the light detector **24**. Instead, the predetermined characteristic may comprise an indication of the deviation of the actually detected wavelength band from the intended wavelength band.

Further, the plurality of light detectors **24** may be arranged to detect light of different wavelengths within a wavelength interval. The relation between the wavelengths detected by different light detectors **24** may be constant even if the light detectors **24** are not manufactured to detect exactly the intended wavelengths. For instance, the thickness of cavities in Fabry-Perot structures may be manufactured with a general deviation from the intended thickness. Thus, the wavelengths detected by the light detectors **24** may all be similarly moved from the intended wavelengths.

In this regard, the predetermined characteristic may comprise only information of the wavelength detected by one reference light detector **24**, since the wavelengths detected by the other light detectors **24** may have a known relationship to the wavelength detected by the reference light detector **24**. For instance, the predetermined characteristic may comprise the center wavelength of the wavelength band detected by the light detector **24**, which detects light of a wavelength that is at a center of the wavelength interval detected by the plurality of light detectors **24**. Alternatively, the predetermined characteristic may comprise the center wavelength of the light detector **24**, which detects the smallest wavelength, or the center wavelength of the light detector **24**, which detects the largest wavelength. As a further alternative, the predetermined characteristic may define the wavelength interval detected by the plurality of light detectors **24**, for example by the predetermined characteristic comprising a smallest wavelength and largest wavelength of the wavelength interval.

The processing of the recorded spectral data using correction data that defines the wavelengths actually detected by the light detectors **24** may include adjusting an index of each detected intensity of light so that the detected intensity is related to the correct wavelength.

The predetermined characteristics of the stored correction data may also or alternatively comprise a transmission loss that is relevant for a light detector **24**. The predetermined characteristic may comprise the transmission losses for a plurality of light detectors **24** or for all light detectors **24**.

The transmission loss may indicate how an intensity of light of a wavelength as detected by a light detector **24** relates to the intensity of light that is incident on the light detector **24** or on a filter **26** associated with the light detector **24**. Thus, using the transmission loss, the intensity of incident light may be determined.

The processing of the recorded spectral data using correction data that defines the transmission loss relevant for the light detectors **24** may include adjusting the detected intensity of light using the transmission loss so that the actual intensity of light incident on the light detector **24** or on the filter **26** is provided.

The recorded spectral data may also or alternatively be processed in relation to characteristics of the illumination source **60**. As described above, the supplementary sensor **62** may detect light from the illumination source **60**. Thus, the supplementary sensor **62** may provide characteristics of the illumination source **60**, such as an intensity of emitted wavelength(s), or a spectral profile of the illumination source **60**.

The recorded spectral data may be corrected or processed in view of the characteristics of the illumination source **60**. For instance, detected intensities of light in the recorded spectral data may be adjusted in relation to intensities of emitted light onto the object **12** to, for example, provide the detected intensity of light as a ratio to the emitted intensity of the respective wavelength. The processed spectral data may thus provide a reflectance of the object **12** that is corrected in view of the irradiance of the illumination source **60**.

It should be realized that there may be other alternatives of correction or processing of the recorded spectral data in view of characteristics of illumination of the object **12**. According to one alternative, the illumination may be constant and fixed, and a spectral profile of the illumination may

thus be stored in the memory **50**. The stored spectral profile may thus be used for correcting the recorded spectral data. According to another alternative, a spectral response from a specific object **12**, such as a plant, may be well-known, such that an identification may be done that the recorded spectral data relates to the specific object and, depending on a shape of the recorded spectral data, a spectral profile of the illumination may be estimated. The recorded spectral data may thus be corrected based on the estimated spectral profile of illumination.

The recorded spectral data may further be processed in order to analyze the recorded spectral data. For instance, analysis of the object **12** may be made based on the recorded spectral data. The processing of the recorded spectral data to perform analysis may be based on the recorded spectral data as received from the electronic circuit module(s) **20** or on refined data as may be provided through one or more of the processing steps described above.

Analysis of the recorded spectral data may be made in numerous different ways at different levels of complexity.

The recorded spectral data may be compared to a target spectral signature. Thus, the recorded spectral data may be matched against the target spectral signature in order to determine whether the recorded spectral data corresponds to the target spectral signature. If there is a correspondence, a conclusion may be drawn that, for example, a target compound is present in the object **12**.

According to another alternative, the target spectral signature may be related to a specific state of the object. For instance, for pulse oximetry, the target spectral signature may be related to a threshold, providing a satisfactory saturation of blood. Hence, the recorded spectral data may be compared to the target spectral signature in order to determine whether saturation is satisfactory or not.

According to another alternative, recorded spectral data may be stored in the memory **50**. Later recorded spectral data may then be processed based on the stored spectral data. For instance, the spectrometer module **10** may first be directed towards the sun or a lamp to obtain source spectral data, providing information of a light source. Then, object spectral data may be recorded from an object **12**, and the object spectral data may be processed using the source spectral data in the memory **50**.

Processing of the recorded spectral data may be performed in the processing unit **90**. The spectrometer module **10** may thus be arranged to output refined data or even result of analysis performed.

The processing of the recorded spectral data may alternatively be performed in an external unit, which receives the recorded spectral data from the spectrometer module **10**. The processing may for instance be performed in a user device **100**, on which the spectrometer module **10** is mounted. The processing may alternatively be performed by an external computer unit **200**, which receives the recorded spectral data via a computer network **210**.

It should also be realized that the processing of the recorded spectral data may be partly performed by several different units, such as the processing unit **90**, a processing unit **120** of the user device **100** and/or an external computer unit **200** in a computer network **210**.

The spectrometer module **10** may output the recorded spectral data or refined data together with information that may be used for performing further processing of the recorded spectral data, such as the correction data or an identifier of the spectrometer module **10**.

Processing of the recorded spectral data using information stored in the memory **50** may include predetermined operations. Thus, the spectrometer module **10** may comprise an integrated circuit that is specifically adapted to perform the predetermined operations. For instance, adjusting the recorded spectral data using the stored correction data may always use the same operations. Thus, the spectrometer module **10** may comprise a processing unit **90** in the form of an ASIC that performs the specific operation for adjusting the recorded spectral data.

The processing unit **90** may be arranged as a combination module, for example an ASIC, which receives the recorded spectral data and corrects wavelength information of the recorded spectral data using the stored correction data. The combination module may also or alternatively adjust a detected intensity in the recorded spectral data using a stored transmission loss.

The combination module may be provided on a chip of the spectrometer module **10**, on which components, such as the electronic circuit module(s) **20**, the illumination source **60** and the supplementary sensor **62**, of the spectrometer module **10** are mounted. Thus, the spectrometer module **10** may be a very compact unit, providing on a single chip a possibility of recording spectral data and outputting refined data.

The spectrometer module **10** may be mounted on a user device **100**, which may also include further components. A schematic illustration of a user device **100** is provided in FIG. **4**. Thus, the user device **100** may include other sensors **110**, a processing unit **120**, which may control the sensors **110** and process data recorded by the sensors **110**, etc.

The user device **100** may generally be any type of device that may communicate with the spectrometer module and may comprise processing capability for processing spectral data recorded by the spectrometer module **10**. Thus, the user device **100** may for instance be a portable user device, such as a mobile phone, a digital camera, a laptop, a tablet PC, or a wearable user device, e.g. a smart watch. The user device **100** may alternatively be a dedicated or general sensor unit, which may provide a plurality of sensors, including the spectrometer module **10**, for making measurements. Such a sensor unit may e.g. be used in an industrial application, such as for performing measurements relevant to an industry process.

The processing of the recorded spectral data may be performed by the processing unit **120** of the user device **100**. The user device **100** may also comprise a memory **130**, external to the spectrometer module **10**, which may store correction data or other data that may be useful in the processing of the recorded spectral data. In such case, the spectrometer module **10** need not necessarily comprise the memory **50**.

The memory **130** of the user device **100** may be provided with correction data upon mounting of the spectrometer module **10** on the user device **100**. Thus, the processing unit **120** may have access to correction data for processing the recorded spectral data.

The recorded spectral data may be transmitted to an external computer unit **200**, for example over a computer network **210**. The spectrometer module **10** may comprise a computer network interface for transmitting the recorded spectral data over the computer network. However, the spectrometer module **10** may output the recorded spectral data to an intermediated device, such as the user device **100**, which may comprise a computer network interface for transmitting the recorded spectral data to the external computer unit **200**.

The recorded spectral data may be transmitted to the external computer unit **200** together with the identifier of the

spectrometer module **10**. The external computer unit **200** may store data relevant for processing the recorded spectral data, such as correction data, in association with the identifier of the spectrometer module **10**. Thus, the external computer unit **200** may be arranged to receive recorded spectral data from a number of spectrometer modules **10** and may be able to retrieve the relevant data, unique to each spectrometer module **10**, for processing the recorded spectral data.

The spectrometer module **10** may be embedded in a user device **100**. The spectrometer module **10** may be a self-contained unit, which is able to output recorded spectral data and/or refined data to the user device **100**. The housing **70** of the spectrometer module **10** may thus be mechanically mounted on the user device **100**, and the spectrometer module **10** may further be electrically connected to components on the user device **100** for, for example, providing power to the spectrometer module **10** and/or providing communication between the spectrometer module **10** and the user device **100**.

The spectrometer module **10** need not necessarily comprise all components described above. The user device **100** may provide some or all functionalities of one or more components described above.

The user device **100** may comprise a memory **130**, which stores correction data that may be used in processing of the recorded spectral data. The memory **130** may also or alternatively store other information that may be useful in processing of the recorded spectral data, such as a target spectral signature.

The user device **100** may comprise a processing unit **120**. The processing unit **120** may be a programmable general-purpose processor, such as a CPU. The processing unit **120** may thus be programmed for processing the recorded spectral data. A computer program may be stored in the memory **130** and may be loaded to the processing unit **120** for causing the processing unit **120** to perform desired processing of the recorded spectral data.

The user device **100** may also or alternatively comprises an illumination source, which may provide illumination of the object **12**. Further, the user device **100** may comprise a supplementary sensor for detecting a spectral profile that is provided by the illumination source of the user device **100**.

The user device **100** may provide other functionalities, which may use or complement recording of spectral data by the spectrometer module **10**. For instance, the user device **100** may be a mobile phone, any wearable device, such as a watch, bracelet or spectacles, or any other type of computing device, such as a personal computer, a laptop or a tablet computer. The user device **100** may alternatively be a device which is designed for the purpose of recording spectral data incorporating the spectrometer module **10**. Thus, the user device **100** may be a sensor unit, for example intended for use in an industrial application, which may combine the spectrometer module **10** with other sensors, a user interface for allowing a user to interact with the sensor unit and/or a network interface for communicating with external units.

The user device **100** may be a portable user device **100**. The user device **100** may comprise a camera **150** adapted to acquire images. The camera may include a lens arrangement defining the field of view of the camera **150**. The lens arrangement may have a fixed focal length (i.e. "a prime lens") or a variable focal length (i.e. "a zoom lens"). The lens arrangement may be a fixed-focus lens arrangement, a manual focus lens arrangement or an autofocus lens arrangement. The lens arrangement may collect incident light onto a digital image sensor such as a CCD or CMOS sensor wherein a digital image may be acquired and recorded as image data according to conventional methods. A recorded image may be stored in a data file in an appropriate image format in the memory **130** and/or on a removable media such as a non-volatile memory card inserted in a card slot of the user device **100**.

The user device **100** may further comprise a display **160** providing a user interface. The display **160** may for example be of an LCD- or a LED-type or some other commercially available technology type.

The user device **100** may further comprise an input device allowing the user to interact with the user interface of the user device **100**. The input device may as is well-known in the art include one or more buttons and/or a touch screen overlaying the display **160**.

The spectrometer module **10** may be a stand-alone device. The spectrometer module **10** may include a network interface for communicating with external units, for example by wireless communication.

The spectrometer module **10** may be arranged on a carrier allowing the spectrometer module **10** to be placed or mounted in a position where recording of spectral data is desired. For instance, the spectrometer module **10** may be placed in an industrial environment, for example, for monitoring progress of an industrial process, such as a manufacturing process.

The spectrometer module **10** may thus be arranged to output recorded spectral data, refined data and/or results of initial analysis of the recorded spectral data. The output may be received by an external unit which may further process the received data.

A system of spectrometer modules **10**, which may be stand-alone devices or embedded in user devices **100**, may be provided. Each spectrometer module **10** in the system may be arranged to record spectral data.

For instance, the spectrometer modules **10** may be arranged to monitor different parts of an environment. Thus, the spectrometer modules **10** may be arranged to monitor different stages of an industrial process or may be arranged to record spectral data from adjacent areas.

The recorded spectral data from a plurality of spectrometer modules **10** may be used in combination in several different manners.

The plurality of spectrometer modules **10** may monitor each stage of an industrial process in order to allow providing an alert as soon as a deviation occurs at any stage in the process.

The plurality of spectrometer modules **10** may record spectral data from massively parallel objects to create a large database with information of objects over time.

The plurality of spectrometer modules **10** may record spectral data from a common object, for example from different parts of the object **12**. Then, the recorded spectral data may be combined, for instance by averaging, in order to improve data quality or robustness of measurements. Also, the plurality of recorded spectral data may be used to remove outliers, which may be recorded from an irrelevant part of the object **12** or from an artefact in the object **12**.

The plurality of spectrometer modules **10** in a system may transmit recorded spectral data to a common external unit **200**, which may perform analysis based on the received data. As an alternative, one of the spectrometer modules **10** in the system may receive recorded spectral data from the other spectrometer modules **10**.

As described above a user device, such as the user device **100** illustrated in FIG. **4**, may comprise a spectrometer module, such as the spectrometer module **10**, which is

adapted to acquire spectral information from a region within the scenery which falls within a field of view of the spectrometer module. As described in the above, the spectrometer module **10** may be embedded in the user device **100**, or the spectrometer module **10** may be mounted externally onto the user device **100**.

The user device **100** further includes a display, such as the display **160**. The display **160** has a controllable spectral output. In particular the spectral output may be controllable in terms of at least one of an intensity (for example by controlling the brightness of the display **160**) and a spectral content (for example by controlling a color displayed on the display **160**).

A processing unit **120** of the user device **100** is adapted to control the spectral output of the display by outputting display data to the display **160**. The display data may accordingly control the display **160** to display an image of a color and/or at a brightness level such that light having the desired spectral content is emitted from the display **160**. For instance, the processing unit **120** may control the display **160** to display a single-color image or an image including two or more colors chosen such that light of a desired spectral content is emitted by the display **160**. The spectral output may be a predetermined spectral output or user-selectable.

The light emitted by the display **160** may provide illumination of a region including a target of the spectrometer module **10**, such as the object **12**, with a desired spectral profile. To improve the ability of the display **160** to illuminate a target of a spectrometer module **10**, the spectrometer module **10** may be embedded in, or mounted externally onto the user device **100**, in such a manner that the spectrometer module **10** is directed in a same direction as the display **160**. For instance the spectrometer module **10** may be arranged on a same side of the user device **100** as the display **160**.

The processing unit **120** may further be adapted to receive spectral data from the spectrometer module **10** which represents the detected incident light from the target **12**.

Accordingly, a controlled relation between the spectral output of the display **160** and light sensitive area(s) **22** of the spectrometer module **10** may be obtained. The light sensitive area **22** may be arranged to detect incident light that has interacted with the illuminated object **12**.

The light from the display **160** may interact with the object **12**. Thus, the light may be for example diffusely or specularly reflected from the object **12**, absorbed by the object **12**, transmitted through the object **12** or scattered by the object **12**. The spectrometer module **10** may detect light received from the object **12**. The spectrometer module **10** may acquire spectral information about the received light and record the acquired spectral information as spectral data, for instance in the memory **50** of the spectrometer module **10**. The recorded spectral data may then be analyzed based on e.g. absorbance of different wavelengths, which may for instance allow determination of whether a compound is present in the object **12**.

The interaction of light with the object **12** may alternatively or additionally cause a shift in wavelength of the light, for example through florescence, Raman scattering or scattering by a moving object **12**. The recorded spectral data may thus also or alternatively be analyzed to identify wavelength shifts, which may for instance allow determination of speed of a moving object **12** or determination of whether a compound is present in the object **12**.

By virtue of having access to the display data controlling the spectral output of the display **160**, the processing unit **120** may output adjusted spectral data corrected on the basis of data representing the spectral output of the illumination source and the spectral data recorded by the spectrometer module **10**.

The recorded spectral data may accordingly be processed for refining the recorded spectral data. The refining of the recorded spectral data may correct or adjust the recorded spectral data in view of the spectral output of the display **160**. As described in detail above the recorded spectral data may additionally be corrected or adjusted in view of conditions under which the spectral data is recorded, or in view of characteristics of the spectrometer module **10**.

Thus, display data provided by the processing unit **120** for the purpose of controlling the spectral output of the display **160** may provide information on the spectral output of the display **160**, such as an intensity of emitted wavelength(s).

The recorded spectral data may be corrected or processed in view of the information on the spectral output of the display **160**. For instance, detected intensities of light in the recorded spectral data may be adjusted in relation to intensities of emitted light onto the object **12** to, for example, provide the detected intensity of light as a percentage of the emitted intensity.

As an alternative to actually refining the recorded spectral data, the processing unit **120** may be adapted to output spectral data received from the spectrometer model **10** along with data representing the spectral output of the illumination source. The spectral data may then be refined during post-processing in a manner similar to what was described above in relation to the processing unit **120**.

In various user scenarios of a spectrometer module, such as the spectrometer module **10**, it may be advantageous to facilitate acquisition of spectral data from an intended region within a scenery, such as the object **12**. Accordingly, a user device, such as the user device **100** illustrated in FIG. **4**, may be arranged to provide assistance for a user in targeting the spectrometer module **10**, i.e. directing the spectrometer module **10** towards a target. As described in the above, a spectrometer module **10** may be embedded in a user device **100**, or a spectrometer module **10** may be mounted externally onto the user device **100**.

The user device **100** includes a camera **150** which is adapted to acquire at least one image of a scenery which falls within a field of view of the camera **150**.

The spectrometer module **10** of the user device **100** is adapted to acquire spectral information from a region within the scenery which falls within a field of view of the spectrometer module **150**.

For the purpose of providing targeting assistance, a processing unit **120** of the user device **100** is adapted to determine a target area of the spectrometer module **10**, within said at least one image, corresponding to the region which falls within the field of view of the spectrometer module **10**, and to output display data to a display **160** of the user device **100** for providing an indication of the target area on the display **160**. The determined target area may be defined as an area of the at least one image which maps or depicts the region within the scenery.

The operations of the processing unit **120** may be implemented by a computer program which may be stored in a memory **130** of the user device **100** and may be loaded to the processing unit **120** for causing the processing unit **120** to perform the desired operations.

In more detail, upon activation of a measuring/spectrometry mode of the user device **100** (for example, by the user of the user device **100** activating the mode by interaction via the input device of the user device **100**), the camera **150** may be activated and adapted to initiate acquisition of a sequence

of images. The images, which alternatively may be referred to as frames, may be stored in the memory **130** of the user device **100** or in a dedicated buffer (such as a FIFO-type frame buffer). The camera **150** may acquire the images at a fixed frame rate, as a non-limiting example 24-30 frames per second. Additionally, upon activation of the measuring mode, the spectrometer module **10** may be adapted to repeatedly (i.e. at a given acquisition rate) acquire spectral information from the region falling within the field of view of the spectrometer module **10** and provide the same to the processing unit **120**.

For each image of the sequence the processing unit **120** may generate and output display data to the display **160** for providing an indication of the target area of the spectrometer module **10** on the display **160**. The acquired sequence of images or frames may be displayed as a video stream on the display **160**, thereby providing real-time feedback to the user of the scenery currently viewed by the camera **150** together with the indication of the target area.

The processing unit **120** may generate and output display data to the display **160** for providing an indication of the target area of the spectrometer module **10** on the display **160** by means of a graphical representation of the target area within each frame of the video stream. As schematically illustrated in FIG. **5**, the graphical representation may include a graphical element enclosing the target area **510**, such as a bounding box. The graphical representation may also include highlighted image pixels within the target area.

The processing device **120** may be adapted to determine the spectrometer module target area based on information representing a position of the target area in an acquired image.

The information representing a position of the target area in an acquired image may be predetermined information. The information may be determined (for instance at the assembly stage of the user device **100** and the spectrometer module **10**) by establishing, for a given distance between the target of the spectrometer module **10** and the spectrometer module **10**, the set or area of pixels of an image acquired with the camera **150**, which maps or depicts the region viewed by the spectrometer module **10**. The predetermined information may hence indicate the set or area of pixels which maps or depicts the region viewed by the spectrometer module **10**. The information may be stored in the user device **100** in a manner allowing the processing device **120** to gain access to the information (for example, in the memory **130**). For instance if the target area is indicated by a graphical element enclosing the target area **510**, such as a bounding box, or by highlighted image pixels within the target area, the information representing a position of the target area in an acquired image may include the coordinates of the bounding box or of the pixels to be highlighted.

In use of the user device **100** and the spectrometer module **10** (e.g. in the measuring/spectrometry mode of the user device **100**) the processing device **120** may accordingly determine the target area by accessing the information and generate and output display data for indicating the target area within each acquired image.

Said given distance may be referred to as a "measurement distance" or "target distance" and may represent a focus distance of the optical module **40** of the spectrometer module **10** or an optimum measurement distance of the spectrometer module **10**.

The processing unit **120** may be adapted to retrieve focus data indicating a focus distance of the camera **150** during acquisition of an image. The focus data may be obtained from metadata generated by a controller of the camera **150** and associated with the acquired image. Alternatively the camera **150** may be arranged to output focus data to the processing unit **120** via an internal communications interface of the user device **100**.

The processing unit **120** may be adapted to compare the focus distance of the camera **150** to the above-mentioned target distance of the spectrometer module **10** and to output user-perceptible information based on a result of the comparison.

Advantageously the processing unit **120** may be adapted to control the camera **150** to focus on a feature in the region which feature is depicted within the target area. Thereby the relevance of the comparison between the focus distance and the target distance may be ensured since the focus data will represent the distance to the feature in the region.

For instance, if the comparison indicates that the focus distance of the camera **150** differs from the target distance of the spectrometer module **10** the user-perceptible information may indicate that the target of the spectrometer module **10** is not in focus in the acquired image. Additionally or alternatively the user-perceptible information may indicate that the target distance of the spectrometer module **10** is greater than the focus distance of the camera **150** (if the focus distance of the camera **150** is smaller than the target distance of the spectrometer module **10**) or indicate that the target distance of the spectrometer module **10** is smaller than the focus distance of the camera **150** (if the focus distance of the camera **150** is greater than the target distance of the spectrometer module **10**). The user may accordingly be guided to move the user device **10** closer to or further away from the target. When the focus distance matches the target distance the spectrometer module **10** may acquire spectral information from the target region. The acquisition may be performed automatically in response to the processing unit **120** detecting that the focus distance of the camera **150** matches the target distance of the spectrometer module **10**.

The user-perceptible information may include one or a combination of visible information via the display (for example, in the form of text or other graphical elements), audible information via a speaker of the user device **100** (for example, in the form of a synthesized or recorded voice) and tactile information via a vibratory unit of the user device **100** (for example, wherein a frequency of the vibration is varied depending on the result of the comparison). As schematically illustrated in FIG. **5** arrows **520** guiding the user to move the user device **100** into (arrow pointing upward) or out of the (arrow pointing downward) scenery may be shown on the display **160**.

As an alternative to the processing device **120** determining a spectrometer module target area based on predetermined information representing a position of the target area in an acquired image, the processing device **120** may be adapted to determine the spectrometer module target area based on information relating the field of view of the spectrometer module **10** to the field of view of the camera **150**. The information may include the relative orientations of the optical axis of the camera **150** and the spectrometer module **10**, respectively, and the angle of the cone representing the field of view of the camera **150** and the field of view of the spectrometer module **10**, respectively. The spectrometer module target area may thus be calculated during use of the user device **100** (for example in the measuring/spectrometry mode of the user device **100**). For a given distance between the target of the spectrometer module **10** and the spectrometer module **10** (e.g. as determined on the basis of focus data from the camera **150**) the area of pixels of an image (i.e. the target area), acquired with

the camera **150**, which maps or depicts the region viewed by the spectrometer module **10** may thus be determined.

An alternative manner of providing assistance for a user in targeting the spectrometer module **10**, i.e. directing the spectrometer module **10** towards a target, will now be described wherein, for the purpose of providing targeting assistance, the processing unit **120** of the user device **100** is adapted to determine an RGB equivalent corresponding to the spectral information acquired by the spectrometer module **10** from the region and to output display data to a display **160** of the user device **100** for providing an indication of the RGB equivalent on the display **160**.

The processing unit **120** may implement a conversion function taking spectral information acquired by the spectrometer module **10** as an input and outputting an RGB equivalent corresponding to the spectral information input.

The spectrometer module **10** may be adapted to repeatedly (i.e. at a given acquisition rate) acquire spectral information and provide the same to the processing unit **120**. The processing unit **120** may be adapted to determine an RGB equivalent corresponding to each acquisition of spectral information by the spectrometer module **10** and repeatedly output display data to the display **160** for providing an indication of an RGB equivalent corresponding to each acquisition of spectral information. The user of the user device **100** may thereby gain a visual real-time feedback on a current target of the spectrometer module **10** and thereby be assisted with targeting of the spectrometer module **10**.

The user device **100** may include a camera, such as the camera **150**, which is adapted to acquire a sequence of images of the scenery. The processing unit **120** may be adapted to output display data to the display **160** for displaying the sequence of images and an indication of the RGB equivalent within or along with (for instance adjacent to) each image.

In more detail, upon activation of a measuring/spectrometry mode of the user device **100** (for example, by the user of the user device **100** activating the mode by interaction via the input device of the user device **100**), the camera **150** may be activated and adapted to initiate acquisition of a sequence of images. The images, which alternatively may be referred to as frames, may be stored in the memory **130** of the user device **100** or in a dedicated buffer (such as a FIFO-type frame buffer). The camera **150** may acquire the images at a fixed frame rate, as a non-limiting example 24-30 frames per second. Additionally, upon activation of the measuring mode, the spectrometer module **10** may be adapted to repeatedly (i.e. at a given acquisition rate) acquire spectral information and provide the same to the processing unit **120**.

For each image of the sequence the processing unit **120** may generate and output display data to the display **160** for displaying the sequence of images and an indication of an RGB equivalent corresponding to each acquisition of spectral information by the spectrometer module **10**.

The sequence of images or frames acquired by the camera **150** may be displayed as a video stream on the display **160**, thereby providing real-time feedback to the user of the scenery currently viewed by the camera **150**. The processing unit **120** may generate and output display data to the display **160** for displaying an indication of a current RGB equivalent together (i.e. adjacent to or overlaying) each frame of the video sequence.

An alternative manner of providing assistance for a user in targeting the spectrometer module **10**, i.e. directing the spectrometer module **10** towards a target, will now be described wherein, for the purpose of providing targeting assistance, the processing unit **120** of the user device **100** is adapted to compare the spectral information acquired by the spectrometer module **10** to a predetermined target spectrum.

The processing unit **120** may provide an output signal indicating the degree of correspondence between the acquired spectral information and the predetermined target spectrum. The output signal may for instance control the user device **100** to output user-perceptible information indicating the degree of correspondence to the user of the user device **100**. The user-perceptible information may include one or a combination of visible information via the display, audible information via a speaker of the user device **100** and tactile information via a vibratory unit of the user device **100**.

Alternatively, the output signal need not indicate an actual degree of correspondence between the acquired spectral information and the predetermined target spectrum but may merely indicate that a sufficient degree of correspondence has been determined (i.e. a spectral match), for instance in response to the processing unit **120** determining that a degree of correspondence exceeding a predetermined threshold.

Visible information provided via the display **160** may for instance be in the form of text indicating the degree of correspondence (e.g. as a percentage or ratio) or that a spectral match has been determined (for example, "Acquired spectrum matches the predetermined target spectrum"). Visible information provided via the display may also be in the form of a graphical representation indicating the degree of correspondence (for example, by a symbol of an intensity or color which varies in a manner correlated with the degree of correspondence, such as from low intensity to high intensity or from a light color to an intense color) or that a spectral match has been determined (for example, by a symbol with a dashed outline changing to a solid outline when a spectral match has been determined, or by a symbol without a fill color changing to a symbol with a distinct fill color when a spectral match has been determined). FIG. **6** illustrates two different examples of text-based visible information **610**, **620** provided on the display **160** of the user device **100**.

Audible information provided via a speaker of the user device **100** may for instance be in the form of an audible signal indicating the degree of correspondence (for example, by a synthesized or recorded voice announcing a degree of correspondence as a percentage or ratio, or by a sounding signal with a frequency which varies in a manner correlated with the degree of correspondence such as between low to high frequency) or that a spectral match has been determined (for example, by a synthesized or recorded voice announcing that a spectral match has been determined, or by a sounding signal being activated when a spectral match has been determined).

Tactile information provided via a vibratory unit of the user device **100** may for instance be in the form of a vibration indicating the degree of correspondence (for example, by a vibration with a frequency or amplitude which varies in a manner correlated with the degree of correspondence such as between a low to high frequency or between a low to a high amplitude).

The processing unit **120** may for instance be arranged to determine the degree of correspondence by estimating an overlap between the acquired spectral information and the predetermined spectrum. The processing unit **120** may for instance be arranged to calculate a cross-correlation of the acquired spectral information and the predetermined spectrum.

The spectrometer module **10** may be adapted to repeatedly (i.e. at a given acquisition rate) acquire spectral infor-

mation and provide the same to the processing unit **120**. The processing unit **120** may be adapted to compare each acquisition of the spectral information by the spectrometer module **10** to the predetermined target spectrum and provide an output signal indicating the degree of correspondence and/or that a spectral match has been determined.

The user of the user device **100** may thereby gain a real-time feedback on a current target of the spectrometer module **10** and thereby be assisted with targeting of the spectrometer module **10**.

The acquisition of the spectral information by the spectrometer module **10** may be initiated upon activation of a measuring/spectrometry mode of the user device **100** (for example, by the user of the user device **100** activating the mode by interaction via the input device of the user device **100**).

In response to the processing unit **120** determining that a spectral match has been determined, or in response to the user providing a user command via the input device of the user device **100**, the spectrometer module **10** may initiate a time-resolved acquisition mode wherein the spectrometer module **10** may repeatedly, at a given acquisition rate, acquire spectral information of the current target. Each acquisition of spectral information by the spectrometer module **10** may be stored as a data set representing a time-resolved spectrum of the target.

For instance the predetermined target spectrum may represent a spectral profile of an oxygenated tissue or blood sample. The user may be informed by user perceptible information provided by the user device **100** when the user device **100** is oriented such that the spectrometer module **10** acquires spectral information from the tissue or sample. A time-resolved spectrum of the tissue or sample may thereafter be acquired which may provide information regarding blood pulsation or other oximetry information.

The foregoing is illustrative of example embodiments and is not to be construed as limiting thereof. Although example embodiments have been described, those skilled in the art will readily appreciate that many modifications are possible in the example embodiments without materially departing from the novel teachings and advantages of the present inventive concept. Accordingly, all such modifications are intended to be included within the scope of the present inventive concept as defined in the claims. Therefore, it is to be understood that the foregoing is illustrative of various example embodiments and is not to be construed as limited to the specific example embodiments disclosed, and that modifications to the disclosed example embodiments, as well as other example embodiments, are intended to be included within the scope of the appended claims.

What is claimed is:

1. A spectrometer module, comprising:

a plurality of separate electronic circuit modules, each of the electronic circuit modules comprising an integrated sensor circuit including a light sensitive area occupying part of an area of the integrated sensor circuit, the integrated sensor circuits of different electronic circuit modules configured to detect incident light within different, set wavelength intervals, wherein the plurality of separate electronic circuit modules include a group of adjacent electronic circuit modules and the light sensitive areas of the adjacent electronic circuit modules in the group are arranged along an edge of the respective integrated sensor circuits, and wherein two adjacent electronic modules in the group of adjacent electronic circuit modules are mounted so that the light sensitive areas thereof are closely arranged along opposing edges of the adjacent electronic circuit modules in the group; and

an optical module, which is common to the plurality of separate electronic circuit modules and arranged to direct incident light towards the light sensitive areas of each of the electronic circuit modules.

2. The spectrometer module according to claim **1**, wherein each of the plurality of separate electronic circuit modules is arranged on a separate die, and wherein the separate dies are mounted in a common plane.

3. The spectrometer module according to claim **1**, wherein the light sensitive areas of the plurality of separate electronic modules together define a sensor plane of the spectrometer module.

4. The spectrometer module according to claim **1**, wherein the light sensitive areas arranged along opposing edges of the adjacent electronic circuit modules of the group are arranged in a corner of the respective electronic circuit modules.

5. The spectrometer module according to claim **1**, wherein each of the electronic circuit modules further comprises a rejection filter arranged on top of the electronic circuit module for controlling a wavelength interval that is allowed to pass the rejection filter towards the light sensitive area.

6. The spectrometer module according to claim **5**, wherein different rejection filters are arranged on top of different electronic circuit modules.

7. A user device comprising a spectrometer module according to claim **1**.

8. The spectrometer module according to claim **1**, further comprising:

an illumination source for illuminating an object, wherein the light sensitive area of at least one of the plurality of separate electronic circuit modules is arranged to detect incident light which has interacted with the illuminated object; and

a housing in which the illumination source and the plurality of separate electronic circuit modules is mounted, wherein the housing further includes a blocking element obstructing light from the illumination source from propagating within the housing to the light sensitive area.

9. The spectrometer module according to claim **8**, wherein the spectrometer module further comprises a supplementary sensor, which is mounted in the housing and which is arranged to receive light propagating internally within the housing from the illumination source to the supplementary sensor.

10. The spectrometer module according to claim **9**, wherein the spectrometer module further comprises a processing unit, which is configured to automatically correct a spectrum recorded by the plurality of separate electronic circuit modules using characteristics of the illumination source as detected by the supplementary sensor.

11. A user device, wherein the spectrometer module according to claim **8** is arranged in the user device by mounting of the housing in the user device.

12. The spectrometer module according to claim **1**, further comprising:

a memory storing predetermined correction data for correcting spectral data detected by the light sensitive areas of each of the plurality of separate electronic circuit modules.

13. The spectrometer module according to claim **12**, wherein the stored correction data comprises a predetermined characteristic of each of the plurality of separate electronic circuit modules.

14. The spectrometer module according to claim **12**, wherein the spectrometer module further comprises a processing unit, which is configured to adjust the spectral data using the stored correction data.

15. The spectrometer module according to claim **12**, wherein the spectrometer module is arranged to output corrected spectral data.

* * * * *