(No Model.) 3 Sheets—Sheet 1.

Z. T. FRENCH & W. C. MEYER.

WELT SEAM TRIMMING MACHINE.

No. 558,379. Patented Apr. 14, 1896.

Fig. 1.

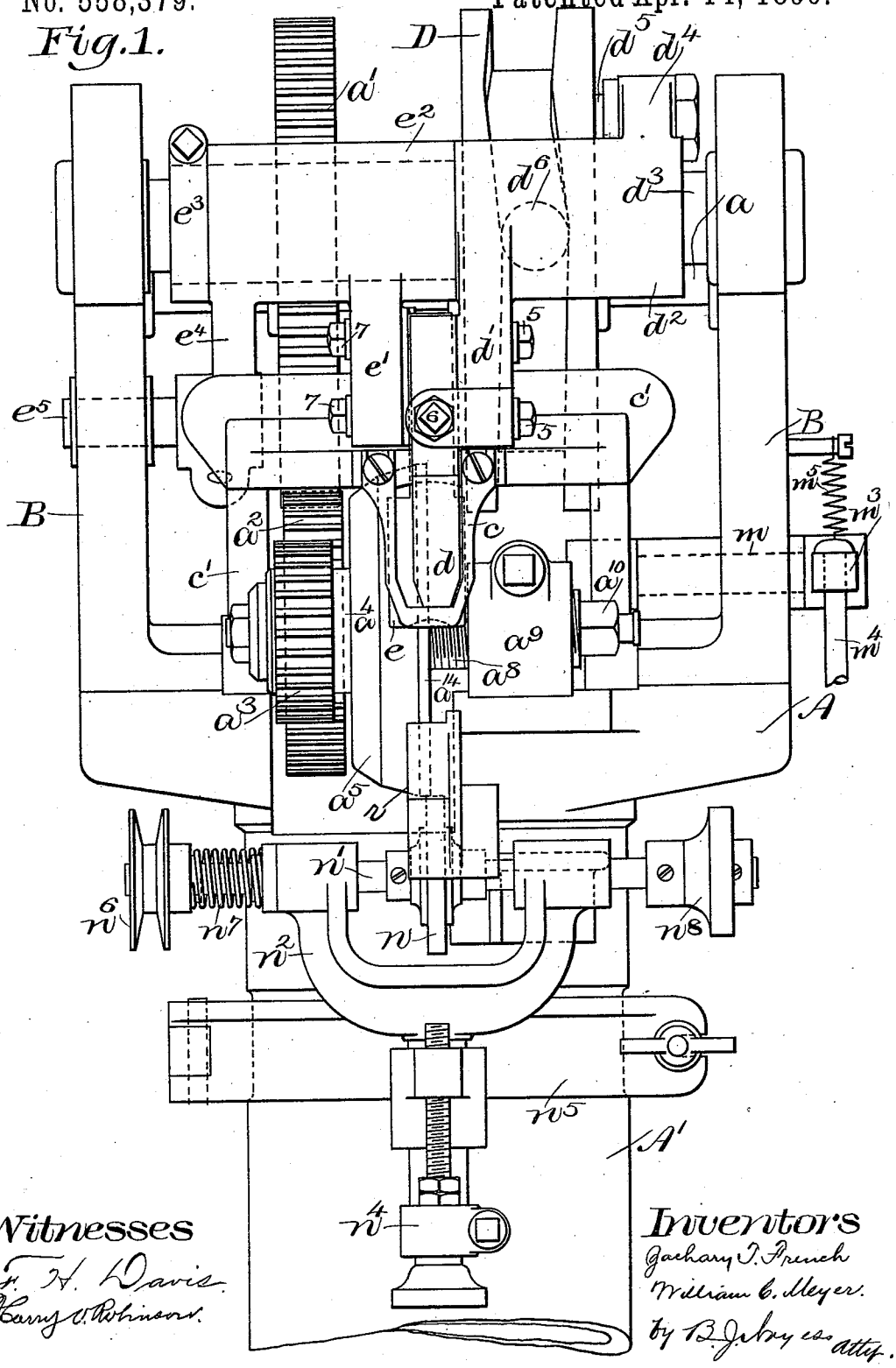

Witnesses
F. H. Davis
Harry V. Robinson.

Inventors
Zachary T. French
William C. Meyer.
by B. J. Noyes Atty.

ANDREW B. GRAHAM, PHOTO-LITHO. WASHINGTON, D.C.

(No Model.) 3 Sheets—Sheet 2.

Z. T. FRENCH & W. C. MEYER.

WELT SEAM TRIMMING MACHINE.

No. 558,379. Patented Apr. 14, 1896.

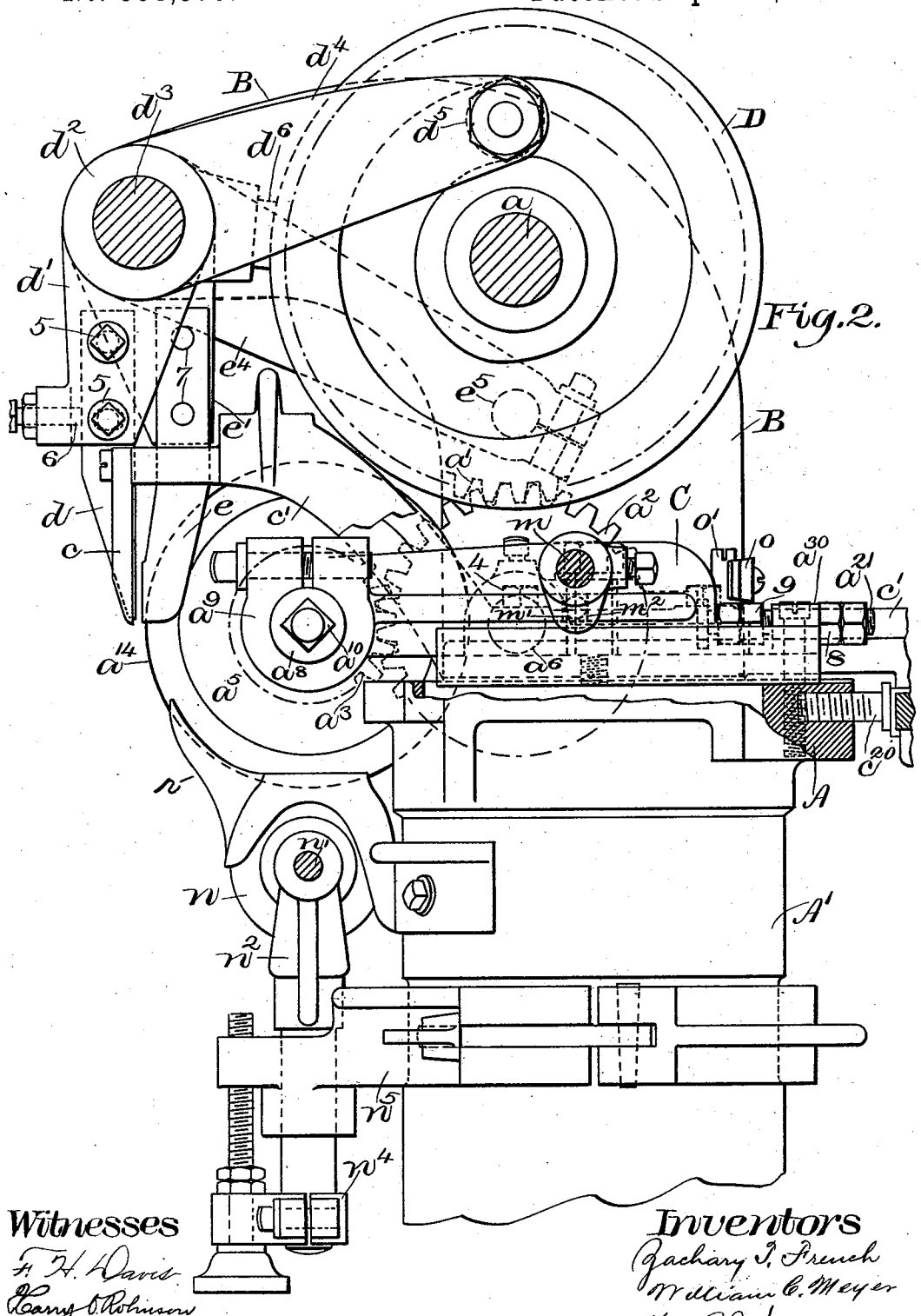

Fig. 2.

Witnesses
F. H. Davis
Harry C. Robinson.

Inventors
Zachary T. French
William C. Meyer
by B. F. Troy ex. Atty.

ANDREW B. GRAHAM, PHOTO-LITHO. WASHINGTON, D.C.

(No Model.) 3 Sheets—Sheet 3.

Z. T. FRENCH & W. C. MEYER.

WELT SEAM TRIMMING MACHINE.

No. 558,379. Patented Apr. 14, 1896.

Fig. 3.

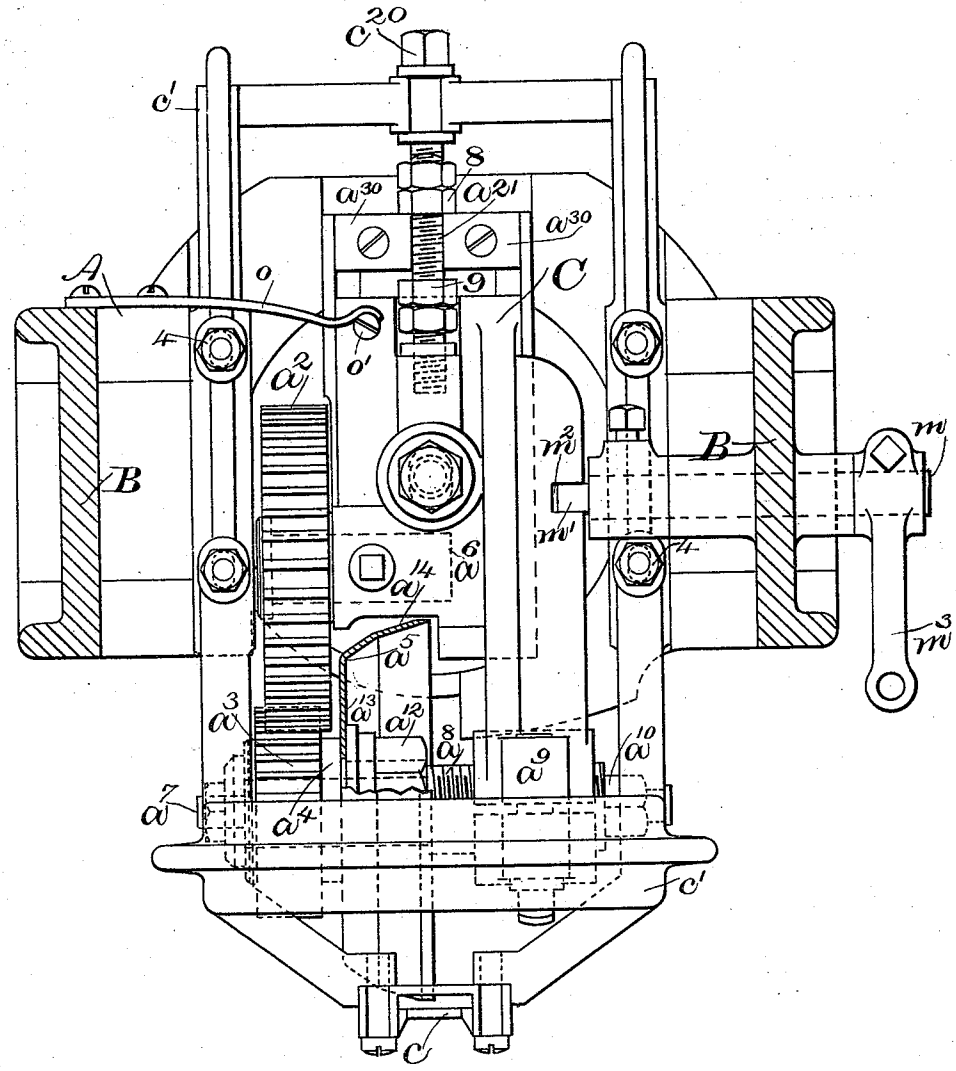

Witnesses

F. H. Davis

Harry S. Robinson.

Inventors

Zachary T. French

William C. Meyer

by B. J. Hayes atty.

ANDREW B. GRAHAM. PHOTO-LITHO. WASHINGTON, D.C.

UNITED STATES PATENT OFFICE.

ZACHARY T. FRENCH AND WILLIAM C. MEYER, OF BOSTON, MASSACHUSETTS.

WELT-SEAM-TRIMMING MACHINE.

SPECIFICATION forming part of Letters Patent No. 558,379, dated April 14, 1896.

Application filed January 27, 1896. Serial No. 576,925. (No model.)

To all whom it may concern:

Be it known that we, ZACHARY T. FRENCH and WILLIAM C. MEYER, of Boston, county of Suffolk, State of Massachusetts, have invented an Improvement in Welt-Seam-Trimming Machines, of which the following description, in connection with the accompanying drawings, is a specification, like letters and figures on the drawings representing like parts.

In the manufacture of welted boots and shoes the welt is sewed through the upper to a channeled inner sole, and then it becomes necessary to trim the welt-seam, or to trim off the "between substance," as it is usually called—*i. e.*, the inner edge of the welt and the edge of the upper at the welt-seam thus formed—so as to present a smooth flat surface for the outer sole.

This invention relates to machines for thus trimming the welt-seam of welted boots and shoes, and has for its object to improve the construction of the machine in many respects tending to increase its capacity as well as its efficiency.

In accordance with this invention intermittent clamp feeding-jaws are provided and means for operating them to grip the work and feed it along, such form of feeding mechanism enabling the work to be fed along without injury to the welt and without straining the seam. A crown-knife is used as the welt-seam-trimming knife, it being continuously rotated by means provided for the purpose, and said crown-knife is located close to the feeding-jaws and in such relation thereto that said jaws lie substantially tangent to the knife. The crown-knife is made adjustable laterally and also in and out, and means are provided for moving said knife in and out while it is revolving. To assist the operator and enable him to better hold and guide the work, a work-support is provided, against which the work may be pressed. A grinding attachment is provided for the crown-knife, so constructed and arranged that the grinding-wheel may be moved into and out of engagement with the crown-knife whenever desired.

Figure 1 shows in front elevation a welt-seam-trimming machine embodying this invention; Fig. 2, a side elevation of the machine shown in Fig. 1, a portion of the main framework being broken away to expose the parts; and Fig. 3, a horizontal section of the machine, showing in plan view the work-support and adjustable frame supporting it, the crown-knife and adjustable frame supporting it, and gears for driving said crown-knife.

The main framework comprises, essentially, a base A, mounted upon a column A', and side pieces B, erected upon said base. The main shaft a is journaled in said side pieces B and has secured to it a toothed gear a', which engages a pinion a^2, which in turn engages a pinion a^3, formed integrally with or secured to a sleeve a^4, upon or to which a crown-knife a^5 is secured. The pinion a^3 revolves on a stub-shaft a^6, (see dotted line, Fig. 3,) secured to and projecting from a frame C, mounted upon and contained in a guideway in the base A. The sleeve a^4, carrying the pinion a^3 and crown-knife, is mounted upon a rod or shaft a^7, supported by said frame C—as, for instance, it has a screw-threaded portion a^8, which is embraced by an interiorly-screw-threaded clamp-like box a^9 on the frame C, and has one end squared, as at a^{10}, to receive a suitable wrench, by means of which said rod or shaft may be turned to adjust it longitudinally, and hence adjusting the parts carried by it. The crown-knife a^5 is clamped to the sleeve a^4 by means of the nut a^{12}, and therefore revolves with said sleeve.

The crown-knife consists of a single piece of sheet metal struck up to form a flat central portion a^{13} and a flaring flange a^{14}, bent angularly, as best shown in Fig. 3, and sharpened at the edge. Such a knife is light, strong, and durable, may be easily sharpened, and by adjustment of the rod or shaft upon which it is placed, and also on the frame supporting it, may be used until it is well worn away.

The frame C, which carries the crown-knife and driving-gearing, is adapted to slide in and out to a limited extent in the guideway provided for it to thereby positively move the crown-knife in and out; and as a means of accomplishing this result we have provided a rock-shaft m, which has its bearings in the main frame, and has at its inner end a crank-pin m', which enters a recess m^2 formed in the side of the frame C, and

said rock-shaft m has an arm m^3 projecting from it at its outer end, which is attached to the upper end of a treadle-rod m^4. By depressing said treadle-rod the shaft m will be rocked and the knife-carrying frame C moved rearwardly. A restoring-spring m^5 is provided for the treadle and rock-shaft.

A strong flat spring o is attached to the frame, which bears against a stud o' rising from the knife-carrying frame, the action of said spring being to thrust the knife-carrying frame forward, and it is against the action of this spring that the treadle moves said frame.

A screw a^{21} is screwed into or attached to the rear end of the knife-carrying frame C, and said screw lies and is free to slide between blocks a^{30} secured to the frame, or if said blocks a^{30} are made in a single piece a suitable recess will be provided, in which said screw slides.

Nuts 8 9 are turned on the screw a^{21}, which are located at opposite sides of the blocks a^{30}, and by striking against said blocks serve as limiting-stops to limit the in-and-out movement of the knife-carrying frame.

The lasted boot or shoe to which the welt has been sewed is held up against a suitable work-support c, herein shown as a loop secured to a yoke or frame c', attached to the base A in an adjustable manner, as by screws 4 passing through slots and entering the base. The yoke or frame c' has at the rear end an adjusting-screw c^{20}, which by turning in or bearing against the frame permits adjustment of said yoke or frame in and out. The lower end of the loop c is made quite thin and more or less tapering, so as to enter the inseam or crease or bear against the upper drawn taut over the last at a point adjacent the welt. The acting end of the loop c is made quite wide, so as to overlie several stitches to equalize the pressure.

Instead of making the work-suppart c as a loop-like structure it may be made in many different ways to present a thin acting end.

As a feeding mechanism we have herein shown a clamp feeding device constructed and arranged to intermittingly feed along the boot or shoe.

The clamp feeding device shown consists of a pair of jaws d e, the lower ends of which are made thin and tapering, so that the front jaw may work close in the inseam or crease and the rear jaw may keep out of the way of the knife, and said jaws are adapted to close together and grip and hold between them the welt, and then carry the boot or shoe along a short distance, and then open, releasing the welt, and then return to their starting-point. Such form of clamp feeding device is frequently called a "four-motion" feeding device.

The jaw d is located within the loop-like work-support c and works back and forth between the vertical arms or sides thereof. This jaw d is attached by screws 5 5 to an arm d', depending from a sleeve d^2, mounted on the rod d^3, being free to rock and also slide longitudinally on said rod. The screws 5 5 pass through slots in said arm d' to enable the jaw d to be adjusted in and out, and a limiting-stop 6 is provided at the front side, bearing against said jaw. Two arms project radially from the sleeve d^2, one, as d^4, bearing the pin d^5, which enters a cam-groove formed in the side of the disk D, secured to the main shaft a, said groove being so shaped that as the disk revolves the sleeve d^2 will be rocked axially on the rod d^3. The other radially-projecting arm d^6 enters a peripheral cam-groove in said disk D, said groove being so shaped as to cause the sleeve d^2 to reciprocate longitudinally on the rod d^3. The parts are so timed that the sleeve d^2 will be first rocked in one direction, moving out the jaw d, then moved on the rod d^3 in a direction toward the right, carrying the jaw d with it, then rocked in the opposite direction, moving the jaw d inward that it may engage the welt, then moved on the rod d in a direction toward the left, thereby giving to the jaw d four motions. The jaw e is attached by screws 7 to an arm e', depending from a sleeve e^2, mounted on a reduced portion of the sleeve d^2. One end of the sleeve e^2 bears against a shoulder formed on the sleeve d^2, and the other end bears against a collar e^3, secured to the projecting end of the sleeve d^2. By this construction the sleeve e^2 is caused to reciprocate longitudinally with the sleeve d^2, yet the sleeve d^2 is permitted to rock or turn on its axis on its supporting-rod independently. An arm e^4 projects radially from the sleeve e^2, bearing a pin e^5, which enters a hole in the side piece B, thereby serving as a steadying device for the rear jaw.

It will be seen that the front jaw d has four motions and the rear jaw e two motions, and in practice we find such motions to be sufficient to enable the jaws to perform the work that they are intended to do.

The rear jaw e is cut away upon its rear side to form a guideway or passage for the crown-knife a^5, in order that said knife may be brought close up to the feeding-jaws, and when the jaws and knife are so disposed with relation to each other it will be seen that said jaws lie substantially tangential to the crown-knife. This form or construction of feeding mechanism works close to the inseam or crease and enables the operator to hold the work at the proper angle in order that the welt-seam may be trimmed close to the stitches all around, and obviates the necessity of tilting the shoe in such manner as is required when using a roller-feed.

The grinding attachment consists of a grinding-wheel n, secured to a shaft n', having its bearings in a yoke or frame n^2, vertically adjustable in a support n^4, attached to or depending from a clamp-like ring n^5, which is made to embrace the column A', said ring

having a detachable fastening by means of which the ring may be loosened and turned around or removed when desired. The shaft n' has at one end a belt-pulley n^6, and is encircled by a spiral spring n^7 for a short distance between said belt-pulley and the frame n^2, said spring tending to throw the shaft in a direction toward the left at such time to remove the grinding-wheel from its engagement with the crown-knife. At the opposite end of said shaft a knob n^8 is provided, by means of which the shaft may be drawn toward the right against the pressure of the spring n^7 and the grinding-wheel thereby brought into engagement with said crown-knife.

By making the welt-seam-trimming knife movable in and out with relation to the feeding mechanism or work-support, we are enabled to vary the trimming of the welt-seams at different parts of the shoe, and we do not desire to limit this feature of our invention to any particular construction or to its combination with the particular construction of any other features of our invention.

A rest r is secured to the frame which passes in front of the knife, and upon or against which the sole of the lasted boot or shoe inside the welt-seam is or may be pressed. This rest r, in conjunction with the work-support c, forms a firm bearing or support for the work, and enables the operator to hold it at a certain definite angle to the knife, and to thus precisely locate the work with relation to the knife.

It will be seen that the curved acting portion of the knife enters or projects into the space between the supports c and r, and the distance that it shall so enter or project may be regulated by adjustment and also by means of the treadle.

We claim—

1. In a welt-seam-trimming machine, a welt-seam-trimming knife turning on an axis, and means for holding and feeding the work, having as a coöperative part of it a device which acts upon the under side of the welt and projects inwardly and terminates close to the point where the cutting is being done, thereby entering the gradually-contracted space between said knife and welt, tangent to the curvature of the knife, and holding the work directly opposite where the cutting is being done, substantially as described.

2. In a welt-seam-trimming machine, the combination of a work-support at the face side of the welt, a continuously-rotating crown-knife at the opposite side thereof, and a pair of intermittent clamp feeding-jaws, and means for operating them to grip the work and feed it along against the cutting edge of the continuously-rotating knife, substantially as described.

3. In a welt-seam-trimming machine, the combination of a continuously-rotating crown-knife, and a pair of intermittent clamp feeding-jaws arranged substantially tangential to said crown-knife, and projecting laterally to a point in advance of and also to a point back of the cutting edge of the knife, to thereby grip the work at a point where the cutting is being done, also in front of and also back of said point, substantially as described.

4. In a welt-seam-trimming machine, the combination of a work-support at the face side of the welt, a continuously-rotating crown-knife at the opposite side thereof, a pair of clamp feeding-jaws arranged substantially tangential to said crown-knife, and means for operating them to grip the work and feed it along, substantially as described.

5. In a welt-seam-trimming machine, the jaws d, e, means for operating them to grip the work and feed it along, the rear jaw e having a guideway upon its rear side, and a continuously-rotating crown-knife which enters and works in said guideway, substantially as described.

6. In a welt-seam-trimming machine, the combination of a pair of clamp feeding-jaws, means for operating them to grip the work and feed it along, a work-support at the face side of the welt, and a crown-knife at the opposite side thereof which assists in holding the work while the feeding-jaws return for a new grip, substantially as described.

7. In a welt-seam-trimming machine, the combination of a welt-seam-trimming knife, clamp feeding-jaws and a work-support, and an adjusting device for adjusting said work-support in and out, substantially as described.

8. In a welt-seam-trimming machine, the combination with feeding mechanism, of a continuously-rotating crown-knife, a sleeve to which it is secured, a longitudinally-adjustable rod or shaft upon which said sleeve is mounted, and means for rotating said sleeve, substantially as described.

9. In a welt-seam-trimming machine, the combination with a work-support and feeding mechanism for the work, of a welt-seam-trimming knife, a movable knife-carrying frame therefor, a spring for moving it toward the work-support, and a treadle and suitable connections for moving it in the opposite direction, substantially as described.

10. In a welt-seam-trimming machine, the combination with a work-support, and feeding mechanism for the work, of a welt-seam-trimming knife, and a yielding knife-carrying frame therefor, whereby the knife is free to move with relation to the work-support, substantially as described.

11. In a welt-seam-trimming machine, the combination with feeding mechanism for the work, of a crown-knife, a rotating shaft bearing it, driving-gear thereon, and a knife-carrying frame supporting said shaft, and means for moving said frame freely in and out, substantially as described.

12. In a welt-seam-trimming machine, the combination of feeding mechanism for the

work, a work-support, a continuously-rotating crown-knife, its shaft, and means for rotating it, a knife-carrying frame supporting said shaft, and means for moving said frame freely in and out, substantially as described.

13. In a welt-seam-trimming machine, the combination with feeding mechanism for the work, of a continuously-rotating crown-knife, a knife-carrying frame, driving mechanism for said crown-knife, a coöperative part of which is borne by said knife-carrying frame, and means for moving said knife-carrying frame in and out while the knife is operating, substantially as described.

14. In a welt-seam-trimming machine, the combination of a pair of clamp feeding-jaws, means for operating them to grip the work and feed it along, a work-support at the face side of the welt, and a crown-knife at the opposite side thereof which assists in holding the work while the feeding-jaws return for a new grip, and a spring-pressed knife-carrying frame for said crown-knife, substantially as described.

15. In a welt-seam-trimming machine, the combination of feeding mechanism for the work, two work-supports as *c* and *r* located a short distance apart to receive the welt-seam between them, and a curved trimming-knife crossing said space and means for moving it substantially at right angles to the progress of the work, substantially as described.

16. In a welt-seam-trimming machine, the combination of feeding mechanism for the work, two work-supports as *c* and *r* located a short distance apart to receive the welt-seam between them, and a curved trimming-knife crossing said space, means for adjusting its position with relation to the work-supports, and means for moving it substantially at right angles to the progress of the work, substantially as described.

17. In a welt-seam-trimming machine, the combination of feeding mechanism for the work, two work-supports as *c* and *r* located a short distance apart to receive the welt-seam between them, and a curved trimming-knife crossing said space, means for moving it freely in and out with relation to the work-supports, and means for moving it substantially at right angles to the progress of the work, substantially as described.

In testimony whereof we haved signed our names to this specification in the presence of two subscribing witnesses.

ZACHARY T. FRENCH.
WILLIAM C. MEYER.

Witnesses:
B. J. NOYES,
F. H. DAVIS.