Jan. 8, 1929. 1,698,264

E. M. HAWKINS

TUBE CUTTING MACHINE

Filed June 15, 1927 3 Sheets-Sheet 1

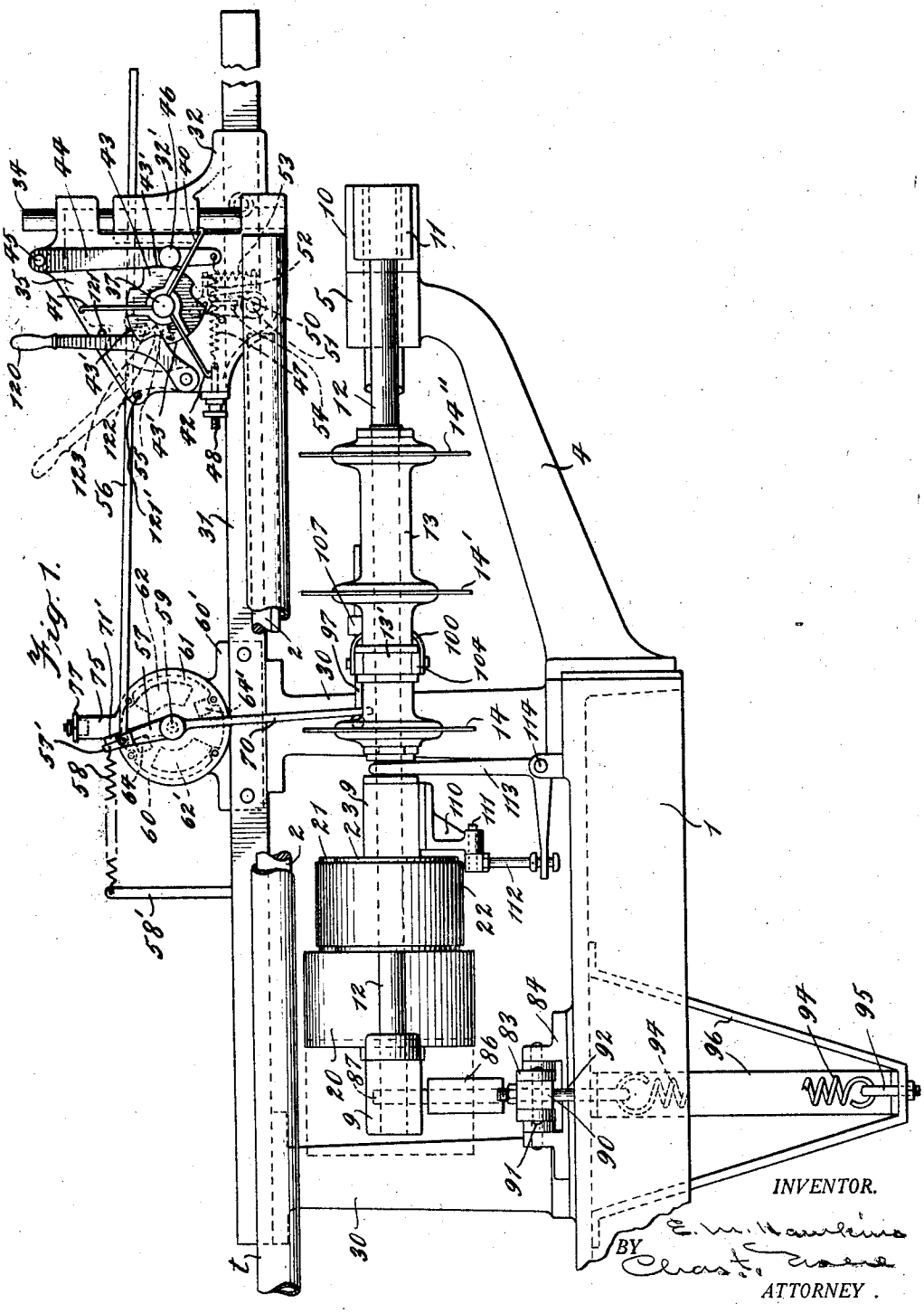

Fig. 1.

INVENTOR.

E. M. Hawkins

BY Chas. F. Craven

ATTORNEY.

Jan. 8, 1929. 1,698,264

E. M. HAWKINS

TUBE CUTTING MACHINE

Filed June 15, 1927 3 Sheets-Sheet 2

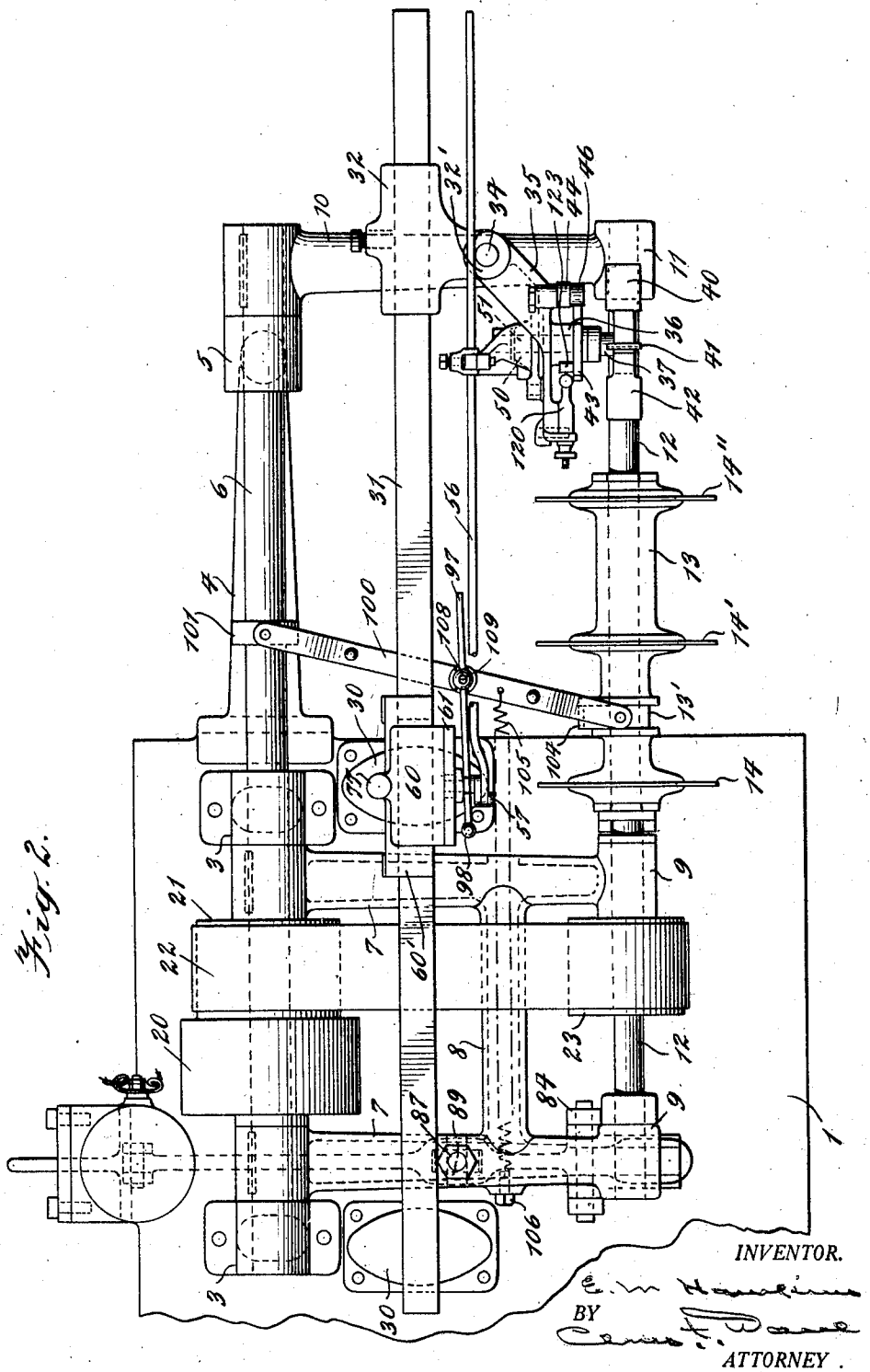

Fig. 2.

INVENTOR.

E. M. Hawkins

BY

Chas. H. Dane

ATTORNEY.

Jan. 8, 1929. 1,698,264

E. M. HAWKINS

TUBE CUTTING MACHINE

Filed June 15, 1927 3 Sheets-Sheet 3

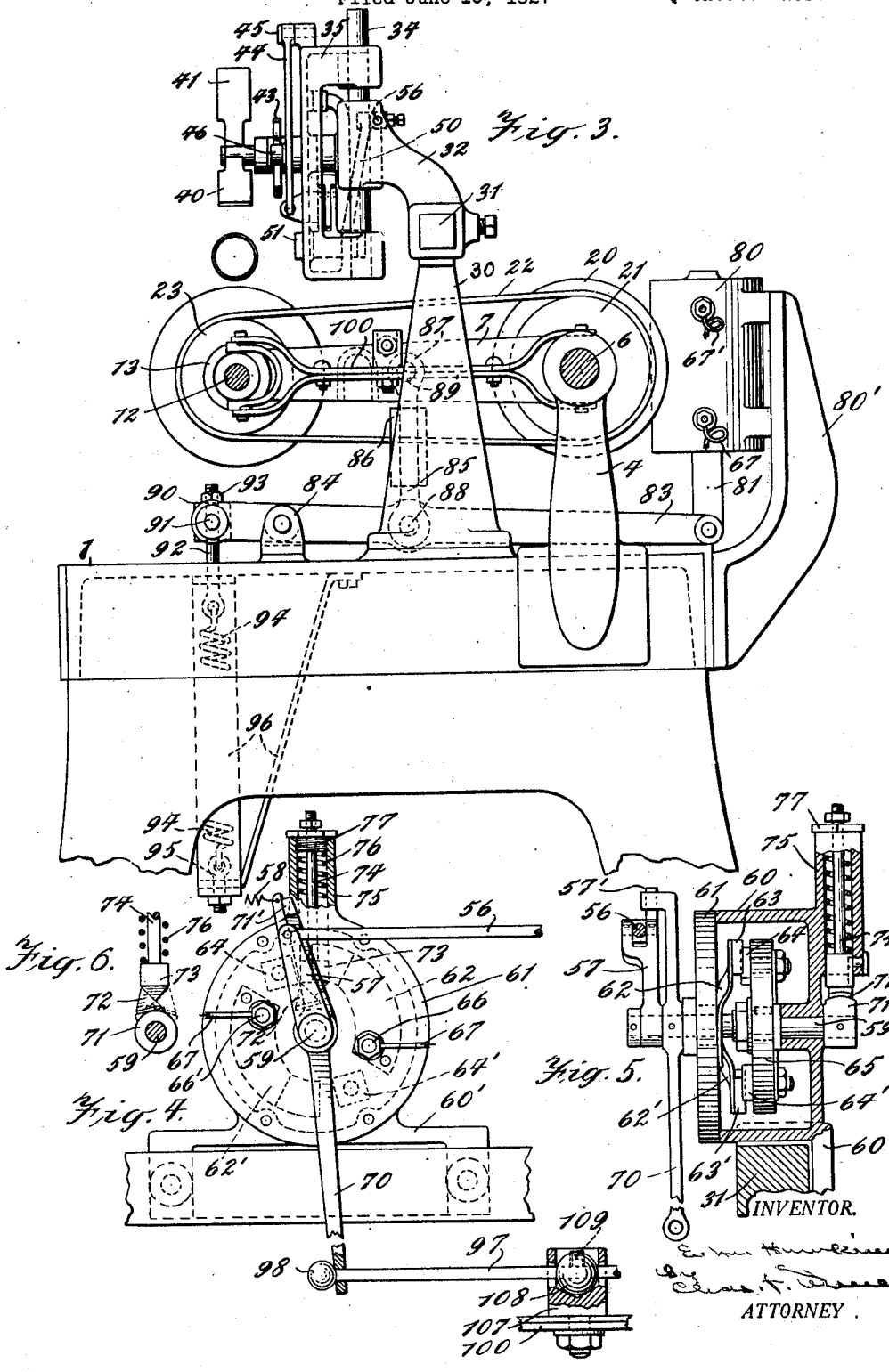

Patented Jan. 8, 1929. 1,698,264

UNITED STATES PATENT OFFICE.

EDGAR M. HAWKINS, OF ROCHESTER, NEW YORK, ASSIGNOR TO M. D. KNOWLTON COMPANY, OF ROCHESTER, NEW YORK, A CORPORATION OF NEW YORK.

TUBE-CUTTING MACHINE.

Application filed June 15, 1927. Serial No. 198,963.

The invention relates to tube cutting machines, and more particularly to machines of the general character shown in application Serial No. 196,351, filed June 3, 1927, designed to cut continuous lengths of tubing into multiple sections of uniform length at each operation, and the object of the present invention is to simplify the construction and operation of the machine by the provision of electromagnetic means for projecting the cutting mechanism into the path of travel of the tubing, which means is also effective for imparting an initial impulse to the cutting mechanism in the direction of travel of the tubing; the electromagnetic means being controlled by switch mechanism actuated by a trip device engaged by the tubing to close the switch to initiate the cutting operation, and special means being provided for returning the cutting mechanism to initial position after each cutting operation, said means also being effective to open the switch controlling the electromagnetic means.

The invention is illustrated in the accompanying drawings, in which:—

Fig. 1 is a front elevation of the machine.

Fig. 2 is a plan view thereof.

Fig. 3 is an end elevation.

Fig. 4 is an enlarged front elevation, partly in section, of the switch mechanism.

Fig. 5 is a sectional side elevation thereof.

Fig. 6 is a detailed view of the means for effecting the snap action of the switch.

Referring to the drawings, 1 indicates the supporting frame of the machine, which is generally like that disclosed in application Serial No. 196,351 aforesaid, and includes a motor, not shown, for driving the arbor of the cutter mechanism, disposed and arranged as in said prior application. Mounted on top of the frame 1 are spaced pedestals 3, 3, in which is journalled a shaft 6, the outer end of which shaft is supported in a bearing 5 on the end of a bracket 4 secured to the end of the frame 1.

Keyed to the shaft 6 is a generally H-shaped frame comprising side members 7, 7 and a cross member 8 provided with journal bearings 9, 9 at the ends of the side members 7, in which bearings is supported the arbor 12 carrying the cutting mechanism, the outer end of the arbor being supported in a bearing 11 on the end of an arm 10, which is keyed to the end of shaft 6.

The cutting mechanism per se is preferably of the same type as that shown in the application aforesaid, including a gang of rotary saws, three in number as illustrated, 14, 14′ and 14″, carried by a sleeve 13, which slides freely on the arbor 12, but is rotatably connected with the latter by splines or ribs.

The saw arbor is constantly driven by belt connections with the motor, said connections including a double pulley 20, 21 rotatably mounted on shaft 6, the pulley 20 being belted to a pulley on the motor shaft and the pulley 21 connected by a belt 22 with a pulley 23 on the arbor 12.

The machine is preferably provided with a mandrel 2 parallel with the saw arbor, which mandrel may form part of the tube making machine with which the cutting apparatus constituting the present invention is associated, in which case the construction and arrangement of the arbor will be that disclosed in said prior application and is designed to guide a continuously travelling tubing through the machine in such relation to the cutting mechanism that the latter may be projected into the path of travel of the tubing and cut the same into multiple predetermined lengths, which sections are adapted to be stripped or discharged from the mandrel successively at the conclusion of each cutting operation.

Mounted on top of the frame 1 are spaced pedestals 30, 30 which support a horizontally disposed bar 31, preferably square in cross section and extending longitudinally of the machine. Adjustable longitudinally of the bar 31 is a bracket 32 having a vertically extended sleeve 32′, in which is secured a rod 34 on which is mounted for vertical adjustment a frame 35 provided with a bearing hub 36 on its front face, in which is mounted a pintle 37 which constitutes the axis of a rotary trip plate and stripping device of the same general character as that shown in the ap-

plication aforesaid, said device comprising a central hub to which are attached three radial arms 40, 41 and 42, the first of which constitutes the trip plate to be engaged by the end of the uncut tubing to initiate the control of the cutting mechanism. Also mounted on the pintle 37 is a plate 43 provided with three peripheral cam surfaces 43′ separated by notches, the peripheral edge of the plate being engaged by a roller 46 mounted on a lever 44 pivoted on a stud 45 secured to the upper part of the frame 35, the lower end of the lever 44 being attached to a spring 47, which is adjustably connected to the frame 35 by a screw bolt and nut connection 48, said spring serving to force the roller into pressure contact with the edge of plate 43 and to impart successive rotatory movements of one hundred and twenty degrees to the radial arms or blades 40, 41 and 42.

Secured to the shaft or pintle 37 is a dog or wiping abutment 55, adapted to engage an upstanding lug on bell crank 52 pivoted to rock lever 50, which, in turn, is pivoted at its lower end to a stud 51 secured to the rear face of frame 35. The bell crank 52 is normally held in engagement with a stop lug or pin 54 on lever 50, by means of the tension spring 53 attached to the horizontal arm of the bell crank at one end and to a pin projecting from the hub of lever 50, this arrangement causing the dog 55, when moved in an anti-clockwise direction, as shown in Fig. 1, to engage the lug on the bell crank and to swing the lever 50 in a clockwise direction. When, however, the shaft 37 and the parts carried thereby are rotated in the opposite direction, when it becomes necessary to adjust the relation of the radial blades 40, 41 and 42 with respect to the travelling tubing, the dog 55 engaging the lug on the bell crank swings the latter on its pivot against the tension of spring 53 without effecting any swinging movement of lever 50. This arrangement permits the readjustment of the trip plate and the stripping blades or arms, should the latter get out of step for any reason.

The upper end of lever 50 is adjustably connected to a pull rod 56 which extends longitudinally of the machine and is connected at one end to an arm 57 loosely mounted on shaft 59 of a rotary quick action or snap switch. The switch mechanism comprises a generally circular casing 60 provided with a bracket member 60′ by means of which it is bolted to the bar 31, said casing having a front closure 61 bolted thereto and having a central opening which constitutes one of the bearings for the shaft 59 upon which the rock arm 57 is loosely mounted. Splined to the shaft 59 is a disk 65 which carries two spaced contact locks 64, 64′ which are secured in position by threaded studs and nuts and are connected by a conductor strip. Mounted on spring arms 62 and 62′ secured to the inner face of the closure 61, are stationary contacts 63, 63′, which are adapted to be brought into and out of engagement with the contacts 64 and 64′, as the shaft 59 is oscillated or given a partial rotation in opposite directions. Fixed to the shaft 59 adjacent rock lever 57 is a lever 70 having an angularly disposed upper end adapted to be engaged by an upward extension 57′ of lever 57, which lever is normally held in retracted position by a spring 58 anchored to rod 58′ fastened to bar 31.

The special mechanism for effecting quick operation of the switch to avoid sparking between the contacts, comprises a collar 71 secured to the shaft 59 and provided with a wedge-shaped lug 72 adapted to be engaged by the correspondingly wedge-shaped end of a plunger 73 slidably mounted in a cylindrical housing 75 formed as an integral part of the switch casing 60, the plunger comprising a rod 74 extending longitudinally through the housing 75 and being forced downward into engagement with the lug 72 by means of a helical spring 76 surrounding the rod and adjusted as to tension by means of a nut 77 engaging the screw threaded upper end of housing 75, the rod 74 being provided on its end with a nut by means of which the throw of the plunger is adjusted. When the shaft 59 of the switch mechanism is rotated in either direction, the wedge face of lug 72 in engagement with the corresponding wedge face of plunger 73 forces the plunger upward against the tension of spring 76 and, as soon as the high parts of the wedges pass each other, the tension of the spring causes the opposite wedge face of the plunger to engage the opposite edge of lug 72 and imparts a quick partial rotation to the shaft 59 and the contact carrying disk secured thereto, thereby bringing about an instantaneous engagement or disengagement of the switch contacts to reduce arcing of the electric current between said contacts.

Mounted on a bracket 80′ secured at the rear of frame 1 is an electromagnet 80, which is preferably in the form of a solenoid having a central core 81, the lower end of which is pinned to a rock lever 83, which latter is pivoted near its opposite end to a bracket 84 mounted on top of frame 1. Pivoted on a pin 88 intermediate the length of lever 83 is a lift rod, preferably of turn buckle construction, comprising end sections 85 and 87 and an adjustable threaded sleeve 86 connecting said sections, the upper end of said lift rod being connected by a cross pin 89 to one of the side arms 7 of the swinging frame which supports the saw arbor. The lever 83 is extended beyond the pivotal support in bracket 84 and is provided at its end with a clevis in which there is supported a perforated block 90, mounted on a cross pin 91 mounted in the clevis, the pin and the block having aligning

openings through which passes an eye bolt 92 provided with an adjusting nut 93, which eye bolt extends through an opening in the top of the frame 1 and has anchored thereto one end of tension spring 94, the opposite end of which is secured to an eye bolt 95 mounted on the pendent bracket 96 secured to the under side of the frame. The purpose of this arrangement is to cause the spring 94 to assume the larger part of the load of swinging the saw arbor frame upward, so as to project the saws into the path of movement of the travelling tubing and thereby reduce the amount of energy required to be applied to the solenoid to this extent. By accurately adjusting the tension of the spring 94 so that the pull of the spring on the lever 83 is just overbalanced by the weight of the swinging frame of the cutter mechanism, it will be necessary to apply only a relatively small amount of current to the solenoid 80 to effect the lifting of the frame of the cutter mechanism to bring the saws into engagement with the tubing.

The solenoid 80 is provided with terminal binding posts which are connected by leads 67 and 67′ with similar terminals or binding posts 66 and 66′ on the front face of the closure 61 of the switch mechanism, which binding posts 66 and 66′ are connected to the spring arms 62 and 62′ carrying the fixed contacts 63 and 63′ of the switch, so that, when the contacts 63 and 63′ are engaged by the contacts 64 and 64′ carried by the movable element of the switch, the circuit to the solenoid is closed, thereby energizing the solenoid and causing its core 81 to move upward, raising lever 83 and swinging the frame carrying the saws upward until the saws are projected into the path of travel of the tubing.

The movement of the saws during the cutting operation, in the direction of travel of the tubing, is effected by the engagement of the saws with the tubing; that is to say, as soon as the saws bite into the tubing, they, with their supporting sleeve, are moved longitudinally of the arbor 12 at the same rate of speed as the tubing, thereby insuring a complete and clean cut by each of the saws. However, inasmuch as the saws and certain coordinated moving parts require considerable energy to start their movement from a position of rest, it has been found expedient to provide means for imparting an initial impulse or movement to the saws longitudinally of the arbor 12 and in the direction of movement of the tubing, just prior to the engagement of the saws with the tubing. This is effected by means of a rock lever 113 pivoted at 114 to the top of the machine frame, said rock lever having a vertical arm with a clevised upper end straddling the arbor 12 and engaging the end of the sleeve 13 carrying the saws, and a horizontal arm which is engaged at its outer end by a pendent rod 112 mounted on a horizontal pivot 111 journaled in a bracket 110 secured to the under face of one of the journal bearings 9 of the swinging saw arbor frame, so that, when said frame is lifted to project the saws into the path of travel of the tubing, the rock lever will be swung on its pivot by the lift rod 112 and thereby impart an initial kick or impulse to the saw carrying sleeve sufficient to initiate the movement of the same in the direction of travel of the tubing just before the saws engage the tubing.

The means for returning the saws to initial position after each cutting operation comprises a horizontally swinging lever 100, which may be conveniently formed of two straps of metal bolted together and splayed at their ends to constitute forks, one of which is pivoted to a collar 101 on shaft 6 and the other to the yoke-like member 104 engaging groove 13′ in the saw carrying sleeve 13. This lever is actuated in its movement to retract the sleeve 13 to initial position by means of a spring 105 connected to said lever 100 at a point intermediate the ends of the latter, said spring being adjustably anchored at its opposite end to an eye bolt 106 secured to one arm 7 of the swinging frame carrying the saw arbor, as more particularly illustrated in Fig. 2.

As hereinbefore stated, the saws during their cutting operation are moved longitudinally of their supporting arbor by reason of their engagement with the tubing, and it is, therefore, necessary to disengage the saws from the tubing after the completion of the cutting operation, to permit the saws to return to their initial position before the next cutting operation. This means that it is necessary to deenergize the magnet which has lifted the saw carrying frame to project the saws into the path of movement of the tubing and, in order to effect this desired result, the following means are provided for operating the switch mechanism to break the circuit to the solenoid. The lever 70 connected to the shaft 59 of the movable member of the switch is extended downward and is provided at its lower end with an eye through which passes a rod 97 having a ball-shaped head 98 on the end engaging lever 70 and a ball 108 adjustable longitudinally of the length of said rod and secured thereto by set screw 109. The ball 108 engages a cup-like member 107 bolted to the swinging lever 100 intermediate the ends of length of the latter, said member 107 having lateral perforations to permit the free movement of the rod 97 therethrough. It will be seen, therefore, that as the lever 100 moves with the saws as the latter travel with the tubing in the cutting operation, the rod 97 slides through the eye in the lower end of the lever 70 and, when the head 98 on the end of the rod engages said lever, it swings the latter, thereby rotating shaft 59 to move

contacts 64, 64′ out of engagement with contacts 63, 63′ and breaking the circuit to the solenoid, which permits the saw frame to drop and the spring 105 to quickly return the sleeve carrying the saws to its initial position. The rod 97 is so adjusted with respect to its engagement with lever 100 that said rod will effect the opening of the switch controlling the solenoid as soon as the cutting operation has been completed, which adjustment is effected by sliding the ball 108 along the rod and securing it to the rod by the set-screw, when the desired adjustment has been obtained.

Under certain conditions, it is desirable and necessary to suspend the cutting operation and to permit the tubing to be fed through the machine without being cut, as, for example, when certain portions of the tubing are found to be defective or the machine becomes clogged for any reason. In order to bring about this result, there is provided a lever 120 pivoted at its lower end to the front of the frame 35 and provided intermediate its length with a latching lug 122 adapted to be moved into and out of engagement with a stop pin or detent 123 on the rear face of cam plate 43, which pin is located diametrically opposite the trip arm 40, the lever being held in its two extreme positions by means of stop pins 121 and 121′ fixed to frame 35, as more particularly shown in Fig. 1. When the lever is moved so that lug 122 is in the path of movement of pin 123 on the cam plate, the next succeeding swinging movement of the trip device brings pin 123 into engagement with latching lug 122 and arrests the movement of the trip device with the several arms or blades thereof entirely out of the path of movement of the tubing, thereby suspending the operation of the trip device until the lever 120 is moved to its opposite position to release said trip device, which is then returned to its operative relation by the normal action of spring actuated lever 44, as hereinbefore explained.

The operation of the apparatus, as described, is as follows: The tubing is fed into the machine in continuous lengths and is guided accurately in its feeding movement by the mandrel 2. When the front end of the tubing engages trip plate 40, it imparts a partial rotation to said trip plate and shaft 37 on which said trip plate is mounted. The rotation of shaft 37 causes dog 55 to engage bell crank 52 mounted on rock lever 50, thereby swinging said rock lever in the direction of movement of the tubing and imparting a forward movement to pull rod 56, which swings rock lever 57, loosely mounted on shaft 59 of the switch mechanism, against the tension of spring 58 and causes the upper end 57′ of said rock lever to engage the lateral extension of arm 70 fast to the shaft of the switch mechanism, thereby causing a partial rotation of the shaft sufficient to bring the switch contacts into engagement, which engagement is accelerated by the snap action of the plunger 73 and the camming collar 71 on the shaft 59. The completion of the initial movement of the trip arm carries the lug 55 out of engagement with the bell crank 52, thereby permitting the rock arm 50 to be returned to its normal position by spring 47 and rock lever 57 to be retracted from engagement with arm 71′ of the switch mechanism, leaving the switch in closed position. The closing of the switch energizes solenoid 80, which immediately attracts its core 81, thereby rocking lever 83 and, through the turn buckle lift rod connecting said lever with the saw frame, also swinging the latter on the shaft 6 and lifting or projecting the saws into the path of travel of the tubing. The initial lifting movement of the saw frame by the solenoid causes the rod 112 to rock bell crank 113 and impart an initial impulse or movement to the sleeve carrying the saws longitudinally of the saw arbor and in the direction of movement of the tubing, so that the tubing will be relieved of the otherwise heavy strain, which would be placed thereon in starting the movement of the saws longitudinally of their arbor. As the saws are constantly rotated on their arbor and the tubing is rotated on the mandrel, the cutting operation is effected quite rapidly and the several sections of the tubing are severed simultaneously. As the end of the uncut tubing had imparted a partial rotation to the trip plate sufficient to bring the roller 46 on the spring actuated lever 44 into engagement with the cam section adjacent the trip arm, the spring applied pressure of the roller imparts a further rotatory movement to the shaft carrying the trip arm, thereby bringing the following radial arm or blade 42 into engagement with the surface of the forward section of the tubing, so that, as soon as the latter has been completely severed, said arm 42 will strip or flip the cut section off of the mandrel. The following cut section will then engage the arm or blade 42 and impart a further partial rotation to the shaft 37, which will cause the spring arm 44 to impart a further kick or partial rotation to shaft 37, thereby causing blade 41 to engage the surface of the second cut section of the tubing and flip the same from the mandrel by a corresponding movement produced by the engagement of the end of the third cut section with blade 41 imparting a partial rotation to shaft 37, which brings the trip arm 40 into engagement with the third cut section to flip the latter off the mandrel, said arm 40 coming to rest in advance of the end of the uncut tubing by reason of the engagement of the roller 46 with the notch in the cam plate adjacent said trip arm 40, so that the trip arm will be in position to be engaged by the advancing end of the uncut tubing,

ready for the next operation. When the cutting operation has been completed, the sleeve carrying the saws has been moved along the arbor 12 by engagement of the saws with the tubing as described, thereby swinging lever 100 to the right, as shown in Fig. 2, said lever moving rod 97 with it until the ball on the opposite end of said rod engages the pendent arm of lever 70 and rocks shaft 59 of the switch mechanism to disengage the switch contacts, the latter operation being facilitated and accelerated by the snap action of the plunger 73 and the camming collar 71 on the shaft 59, as hereinbefore described. The breaking of the circuit to the solenoid deenergizes the latter, releasing the core and permitting the frame carrying the saws to drop, at which time spring 105 swings lever 100 to the left, as shown in Fig. 2, thereby moving the sleeve 13 carrying the saws to its initial position.

What I claim is:

1. A tube cutting machine, comprising neans for guiding a travelling tubing through the machine, cutting means mounted for transverse and parallel movements relative to the tubing, trip controlled electromagnetic means operative to project the cutting means into the path of travel of the tubing, and means operated by the projecting means to impart an initial impulse to the cutting means in the direction of travel of the tubing.

2. A tube cutting machine, comprising means for guiding a travelling tubing through the machine, cutting means mounted for transverse and parallel movements relative to the tubing, an electromagnet operative to project the cutting means into the path of travel of the tubing, means actuated by the advance of the tubing controlling the operation of said magnet, said means including a trip plate engaged by the tubing and a switch operatively connected to said trip plate, and means actuated by the movement of the cutting means to open said switch after the completion of the cutting operation.

3. A tube cutting machine, comprising means for guiding a travelling tubing through the machine, cutting means mounted for transverse and parallel movements relative to the tubing, an electromagnet operative to project the cutting means into the path of travel of the tubing, means actuated by the advance of the tubing controlling the operation of said magnet, said means including a trip plate engaged by the tubing and a switch operatively connected to said trip plate, means actuated by the movement of the cutting means to open said switch after the completion of the cutting operation, and means to return the cutting mechanism to initial inoperative position.

4. A tube cutting machine, comprising means for guiding a travelling tubing through the machine, cutting means mounted for transverse and parallel movements relative to the tubing, an electromagnet operative to project the cutting means into the path of travel of the tubing, means actuated by the advance of the tubing controlling the operation of said magnet, said means including a trip plate engaged by the tubing and a switch operatively connected to said trip plate, means actuated by the movement of the cutting means to open said switch after the completion of the cutting operation, and means to return the cutting mechanism to initial inoperative position comprising a pivoted arm connected to the cutting mechanism and a spring actuating said arm.

5. A tube cutting machine, comprising means for guiding a travelling tubing through the machine, cutting means mounted for transverse and parallel movements relative to the tubing, an electromagnet operative to project the cutting means into the path of travel of the tubing, means actuated by the advance of the tubing controlling the operation of said magnet, said means including a trip plate engaged by the tubing and a switch operatively connected to said trip plate, means actuated by the movement of the cutting means to open said switch after the completion of the cutting operation, and means to return the cutting mechanism to initial inoperative position comprising a pivoted arm connected to the cutting mechanism and a spring actuating said arm, said pivoted arm having an adjustable connection with the switch operating means.

6. A tube cutting machine, comprising means for guiding a travelling tubing through the machine, a pivoted frame carrying a cutter arbor parallel with the path of travel of the tubing, cutting means slidable on the arbor, an electromagnet operative to swing the frame and move the cutting means into engagement with the tubing, a switch controlling said magnet, a trip device engaged by the end of the tubing connected to said switch for closing the latter, means for returning the cutting mechanism to initial position, and means connected with said returning means for opening the switch.

7. A tube cutting machine, comprising means for guiding a travelling tubing through the machine, a pivoted frame carrying a cutter arbor parallel with the path of travel of the tubing, cutting means slidable on the arbor, an electromagnet operative to swing the frame and move the cutting means into engagement with the tubing, means actuated by the swinging movement of the frame toward the tubing to initiate the sliding movement of the cutting means with the tubing, a switch controlling said magnet, a trip device engaged by the end of the tubing connected to said switch for closing the latter, means for returning the cutting mechanism to initial position, and means connected

with said returning means for opening the switch.

8. A tube cutting machine, comprising means for guiding a travelling tubing through the machine, a pivoted frame carrying a cutter arbor parallel with the path of travel of the tubing, cutting means slidable on the arbor, an electromagnet operative to swing the frame and move the cutting means into engagement with the tubing, a bell crank loosely engaging the cutting means, a pendent rod on the pivoted frame connected to said bell crank to rock the latter and impart an initial movement to the cutting means with the tubing, a switch controlling said magnet, a trip device engaged by the end of the tubing connected to said switch for closing the latter, means for returning the cutting mechanism to initial position, and means connected with said returning means for opening the switch.

9. A tube cutting machine, comprising means for guiding a travelling tubing through the machine, a pivoted frame, a saw carrying sleeve slidable on said frame, an electromagnet for moving the frame toward the tube guiding means, and means connected to the frame and actuated by the movement of the latter toward the tubing to impart an initial movement of the sleeve with the tubing.

10. A tube cutting machine, comprising means for guiding a travelling tubing through the machine, a pivoted frame, a saw carrying sleeve slidable on said frame, an electromagnet for moving the frame toward the tube guiding means, a lift rod suspended from the frame, and a bell crank having one arm connected to said rod and the other engaging the sleeve; whereby the movement of the frame toward the tubing will cause the bell crank to start the movement of the sleeve with the tubing.

11. A tube cutting machine, comprising a mandrel for guiding the tubing through the machine, a pivoted frame, a saw carrying sleeve slidable on said frame, an electromagnet for swinging the frame toward the mandrel, a switch controlling the circuit to said magnet, a trip device operated by the travelling tubing to close the switch, means for returning the sleeve to initial position, and means connected to said returning means for opening the switch.

12. A tube cutting machine, comprising a mandrel for guiding the tubing through the machine, a pivoted frame, a saw carrying sleeve slidable on said frame, an electromagnet for swinging the frame toward the mandrel, a switch controlling the circuit to said magnet, a trip device operated by the travelling tubing to close the switch, a spring actuated lever pivoted to the frame and connected to the sleeve for returning the latter to inoperative position, and an adjustable pull rod connecting said lever and the switch to open the latter after the completion of the cutting operation.

13. A tube cutting machine, comprising a mandrel for guiding the tubing through the machine, a frame pivoted for swinging movement toward and from the mandrel, a saw carrying sleeve slidable on said frame, an electromagnet for swinging the frame toward the mandrel, a rotary switch controlling the circuit to said magnet, said switch including an arm fast to the shaft therof and an arm loose on said shaft, a trip device operated by the travelling tubing, connections between the trip device and the loose arm on the switch shaft to close the switch, a spring actuated lever pivoted to the frame and connected to the sleeve for returning the latter to initial position, and connections between said lever and the arm fast to the switch shaft to open the switch.

14. A tube cutting machine, comprising a mandrel for guiding the tubing through the machine, a pivoted frame having an arbor parallel with the mandrel, a saw carrying sleeve slidable on the arbor, an electromagnet for moving the frame toward the mandrel, a switch including a rotary shaft with a fixed arm and a cooperating loose arm thereon, a pivoted trip plate engaged by the end of the tubing, connections between the trip plate and said loose arm to swing the latter into engagement with the fixed arm to close the switch and energize the electromagnet, a spring actuated lever pivoted to the frame and to the sleeve for returning the latter to initial position, and a pull rod adjustably connected to said lever and slidably connected to the arm fast to the switch shaft to open the switch after each cutting operation.

15. A tube cutting machine, comprising a mandrel, a pivoted frame, a saw carrying sleeve slidable on said frame in parallelism with the mandrel, an electromagnet for swinging the frame toward the mandrel, a switch controlling the circuit to said magnet, a rotary trip device engaged by the tubing and effective to close said switch, means connected with said sleeve for returning the latter to initial position, and adjustable means connecting the returning means with the switch to open the latter after each cutting operation.

16. A tube cutting machine, comprising a mandrel, a pivoted frame, a saw carrying sleeve slidable on said frame in parallelism with the mandrel, an electromagnet for swinging the frame toward the mandrel, a switch controlling the circuit to said magnet, a rotary trip device engaged by the tubing and effective to close said switch, means connecting said trip device and the switch to close the latter, said means including a dog on the shaft of the trip device, a rock lever having a spring held detent in the path of

said dog and operative to move the rock lever when engaged by the dog in its normal operation and inoperative to move the lever upon opposite movement of said dog, whereby said trip device may be adjusted, and a pull rod connecting the rock lever and switch, means connected with said sleeve for returning the latter to initial position, and adjustable means connecting the returning means with the switch to open the latter after each cutting operation.

In testimony whereof I affix my signature.

EDGAR M. HAWKINS.