(12) UK Patent Application (19) GB (11) 2 425 335 (13) A

(43) Date of A Publication 25.10.2006

(21) Application No: 0508229.2

(22) Date of Filing: 23.04.2005

(71) Applicant(s):
Colin Alfred Pearson
35 Claremont Road, LONDON, N6 5DA,
United Kingdom

(72) Inventor(s):
Colin Alfred Pearson

(74) Agent and/or Address for Service:
Mathys & Squire
120 Holborn, LONDON, EC1N 2SQ,
United Kingdom

(51) INT CL:
F04B 9/00 (2006.01) B01D 61/06 (2006.01)
F04B 7/00 (2006.01) F04B 9/04 (2006.01)
F04B 9/08 (2006.01) F04B 9/10 (2006.01)
F04B 9/107 (2006.01) F04B 17/00 (2006.01)
F04B 35/00 (2006.01) F04B 39/00 (2006.01)
F04B 53/14 (2006.01)

(52) UK CL (Edition X):
F1W WCQ WDB WEB W203 W504 W518

(56) Documents Cited:
GB 2391912 A

(58) Field of Search:
UK CL (Edition X) **F1W**
INT CL[7] **F04B**
Other:

(54) Abstract Title: **A pump powered partly by a mechanical drive and partly by a pressurised fluid flow**

(57) A pump powered partly by a mechanical drive and partly by a pressurised fluid flow, for use in reverse osmosis and similar systems. The pump consists of a piston-in-cylinder assembly. A first face of the piston (14 figure 1) pumps a first fluid flow while a second fluid flow is applied to the opposite piston face, thus supplementing the drive force applied to the piston via a piston rod (13 figure 1). Input and output of the first fluid is controlled by first valves of a non-return poppet type, operated by the pressure differential across them. Input and output of the second fluid is controlled by second valves of a non-return poppet type, which are themselves controlled by operational connection to the first valves. The piston is configured to have limited axial travel relative to the piston rod and separately limited axial travel relative to the cylinder, this may include piston rod buffer means 24 and 25 and end stop means 20 and 21 which incorporate elastic means to absorb and return kinetic energy. It is independently claimed that the piston is mounted on the piston rod by axial force limiting means.

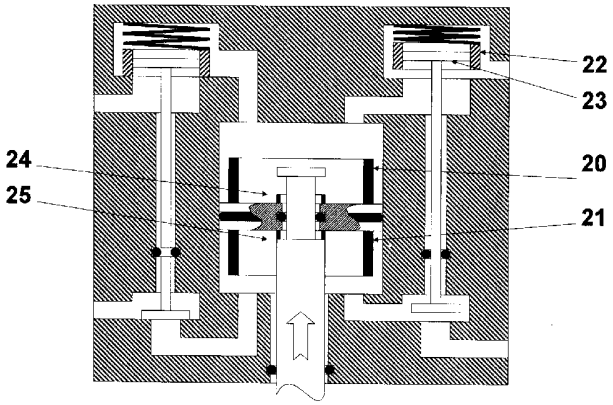

Figure 2

GB 2 425 335 A

Original Printed on Recycled Paper

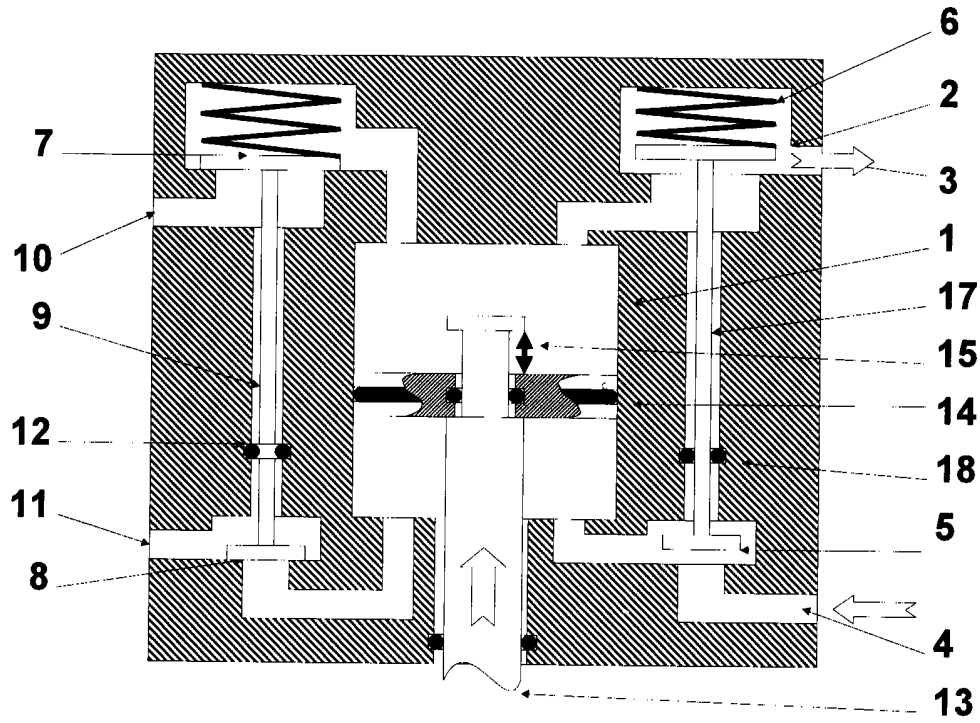

Figure 1 Prior Art

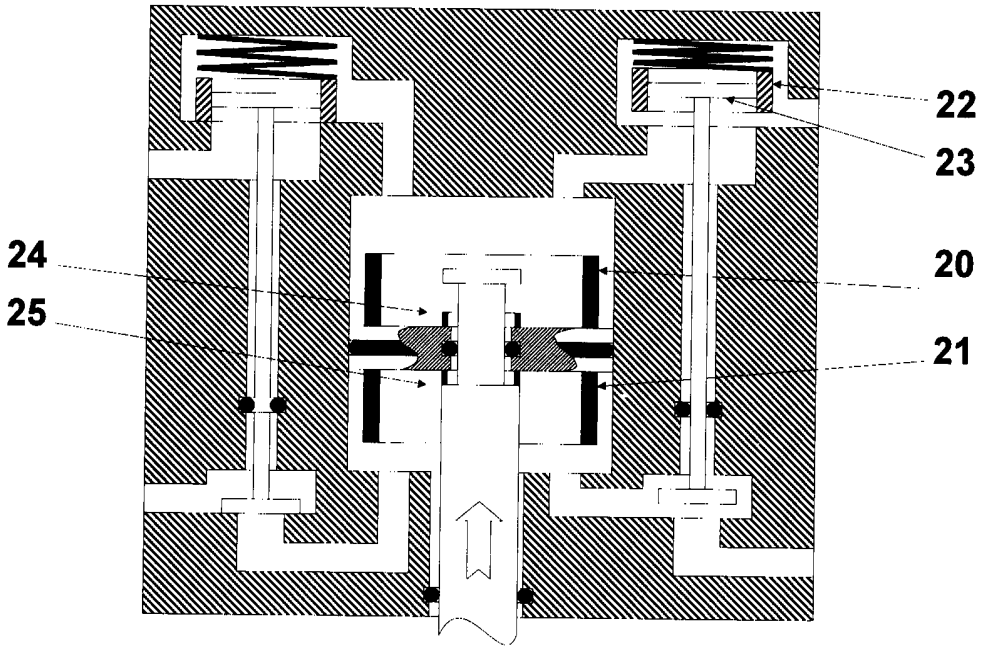

Figure 2

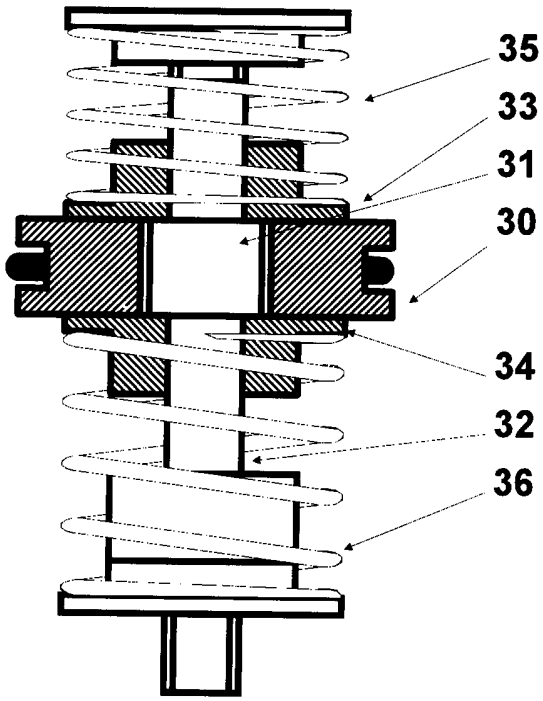

Figure 3

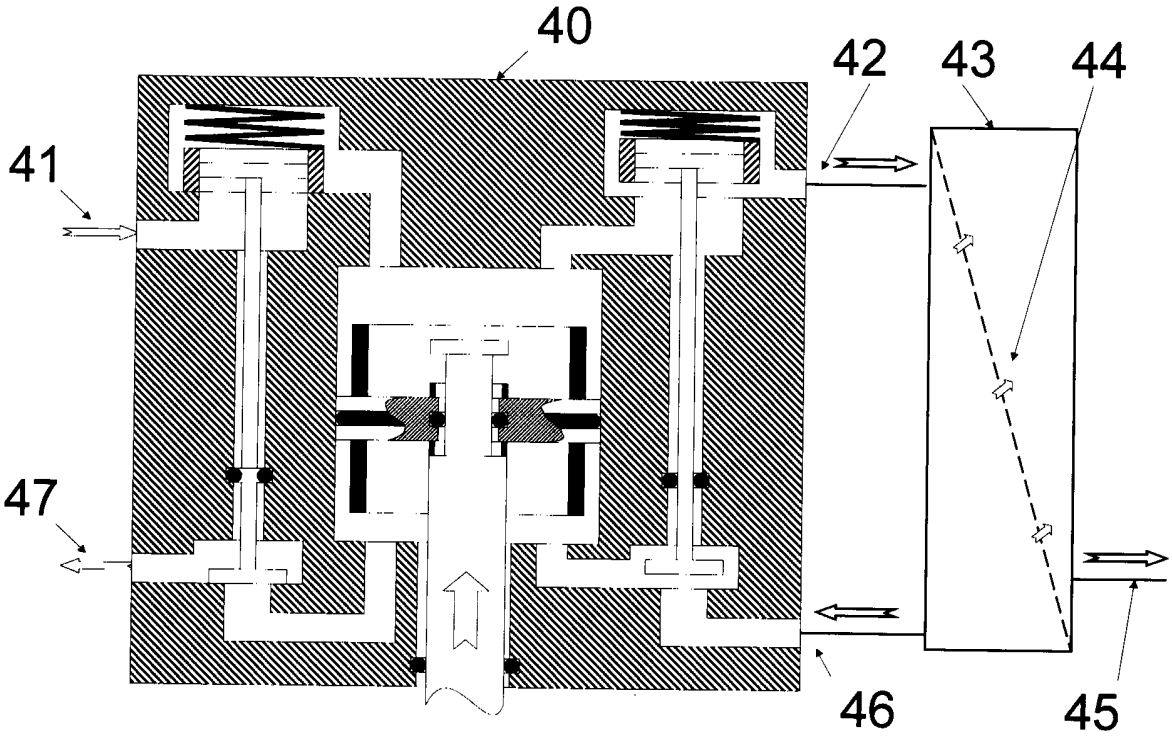

Figure 4

Fluid Pump and Motor Unit

The invention herein described is a pump powered partly by a mechanical drive and partly by a pressurised fluid flow. The pump is particularly applicable to reverse osmosis systems, which commonly waste a large part of their input energy by failing to recover the energy in a pressurised waste fluid flow. Energy savings up to 80% are possible.

The pump and motor unit consists of one or more piston-in-cylinder assemblies. In operation, each piston reciprocates within its cylinder. One face of each piston provides a pumping action while the opposite face acts as a motor, driven by a pressurised driving fluid flow, thus supplementing a mechanical drive force applied to each piston via a piston rod. Input and output of the pumped flow is controlled by pump valves of a non-return poppet type, opened and closed by the pressure differential across them of the pumped flow. Input and output of the driving fluid is controlled by motor valves which may also be of poppet type and are controlled by operational connection to the pump valves. A poppet valve in this context is one in which the moving element is referred to as a poppet and has an axis of operational movement which is perpendicular to the plane of the sealing surface. Poppet valves have advantages over other valve types in that there is little wear on their sealing surfaces and no requirement for expensive close-tolerance manufacture.

Each piston is mounted on its associated piston rod by means allowing limited axial travel of the piston relative to its rod. This enables movement of the piston rod to pressurise and depressurise fluid on both faces of the piston at the beginning of each respective pumping and return stoke, prior to opening of the relevant valves. Without this feature, high pressure differentials would be developed across the piston at the beginning of each stroke, with consequent high mechanical drive forces.

Prior art disclosing the foregoing principles includes, most relevantly, DE3923722 (e.g. figure 4) and GB2391912

The current invention differs from prior art in having novel means to control the axial motion of the piston relative to the cylinder or piston rod, said means reducing the sensitivity of the pump to operating pressures and pressure pulses, thus allowing simpler application and faster running.

The current invention also claims novelty in incorporating a two-part moving element within each pump valve, to remove the need for close-tolerance manufacture.

Figure 1 shows schematically a single cylinder of a pump and motor unit in accordance with prior art, solely to provide context.

In application to reverse osmosis desalination, operating pressures would typically be 1 bar gauge at the pump inlet, 60 bar gauge at the pump outlet, 58 bar gauge at the motor inlet and 1 bar gauge at the motor outlet.

The piston rod 13 is on an upward, pumping stroke, the piston 14 being held against the lower limit of its axial travel relative to the piston rod by the pressure differential across the piston. Pumped fluid from the top of the cylinder 1 leaves via pump outlet port 3 after passing through pump outlet valve 2. Driving fluid enters through motor inlet port 4 and passes to the bottom of cylinder 1 via motor inlet valve 5. The valves 2 and 5 are opened and held open against return spring 6 by the pressure differential across each said valve. Said valves are connected together by valve stem 17, with seal means 18 to prevent leakage between the top and bottom of cylinder 1.

Pump inlet valve 7 is held shut mainly by the pressure differential across it, the pump outlet pressure from the top of the cylinder being applied to its top surface and the obviously lower pump inlet pressure being applied to its lower surface. Motor outlet valve 8 is held shut by its

connection to pump inlet valve 7 via valve stem 9, as it would otherwise be opened by the pressure differential across it, the motor inlet pressure from the bottom of cylinder 1 being applied to its bottom face and the motor outlet pressure being applied to its top face, The relative sizes of valves 7 and 8 are chosen to ensure that the closing force applied by valve 7 exceeds the opening force on valve 8. Leakage flow between pump inlet port 10 and motor outlet port 11 is prevented by seal means 12.

At the end of the pumping stroke piston rod 13 and piston 14 stop, causing flow through valves 2 and 5 to cease, allowing them to be closed by spring 6.

At the start of the return stroke, piston rod 13 begins to move downwards. Since axial movement 15 is permitted between rod 13 and piston 14, piston 14 remains substantially stationary but is free to move slightly to equalise pressures across it as the movement of the rod reduces the pressure of the fluid in cylinder 1. The amount of relative movement 15 required depends on the bulk modulus of the working fluid and the volume and stiffness of the pump unit's internal volumes. Typically relative movement 15 would be 5% to 20% of the piston rod stoke. Once the cylinder pressures are reduced to levels comparable with the pump inlet and motor outlet pressures, the limit of relative movement 15 is reached, piston 14 starts to move with rod 13 causing pump inlet valve 7 and motor outlet valve 8 to open.

Stroke reversal at the end of the return stroke follows a sequence similar to that described for the end of the pumping stroke. The initial movement of rod 13 increases the pressures in cylinder 1 to levels comparable with the pump outlet and motor inlet pressures, prior to the opening of pump outlet valve 2 and motor inlet valve 5.

Figure 2 shows the same pump and motor unit as figure 1 but embodying features of the current invention, aimed to overcome problems with prior art.

Piston end stop means are fitted between the piston and the cylinder, for example 20 and 21, to stop the piston when the piston rod stops at either end of its stroke. Prior art relies on operating pressures alone to do this. Without said means, operating pressures may allow the piston to continue moving after the rod has stopped. This will reduce the relative movement between the piston and the rod that is available to permit equalisation of pressures across the piston during pressurisation and depressurisation of the cylinder during stroke reversal. Without said equalisation of pressures, high pressure differentials will be developed across the piston, leading to transient overloading of the mechanical drive and cavitation damage within the pump unit. Piston end stop means may be substantially rigid, or may incorporate elastic means to absorb and return the kinetic energy of the piston and fluid flows.

Piston-rod buffer means 24 and 25 are fitted between the piston and those parts of the piston rod limiting axial movement of the piston relative to the rod. Said buffer means incorporate elasticity to reduce transient loads and pressures when the piston reaches the limits of its travel relative to the piston rod.

Said piston end stop means and piston rod buffer means may be incorporated as part of a single piston moulding

Each pump valve has a moving element consisting of two main parts: an annular valve sleeve 22 and a valve plug 23, plug 23 being free to slide axially within sleeve 22. Appropriate seal means are incorporated to prevent leakage between plug 23 and sleeve 22. Plug 23 is connected to the corresponding motor valve to control its operation via the valve stem. Since plug 23 is free to slide within sleeve 22, there is need neither for expensive close-tolerance manufacture to ensure that both pump and a rigidly connected motor valve can close fully, nor for the connection between them to incorporate means to permit relative motion between them.

Each pump valve may be manufactured as a sub-assembly with its connected motor valve, and the same sub-assembly used twice for each cylinder.

As shown in figures 1 and 2, all valves open by upward movement of the moving elements and the closing forces applied to the moving elements of motor valves 5 and 8 are downward via compression in valve stems 9 and 17. It is also possible to configure either of both of the connected pairs of pump and motor valves to open by downward movement of the moving elements, with closure of the motor valves effected by upward forces via tension in the valve stems. This may offer advantages in manufacture.

Figure 3 shows an alternative mounting of the piston to the piston rod. At rest, with no pressure differential across it, the piston 30 surrounds an enlarged portion 31 of the piston rod 32. It is held in this position by an upper washer 33 and a lower washer 34, which are acted on by an upper compression spring 35 and a lower compression spring 36. This arrangement fixes the axial position of the piston 30 relative to the rod 32 until a pressure differential across the piston causes a force on the piston exceeding the force applied by the relevant spring. The spring rates and preload forces of springs 35 and 36 may be chosen to prevent the piston continuing to move after the piston rod has stopped at stroke end, while allowing substantial equalisation of pressures across the piston at the start of each stroke. Reasons for the desirability of this are outlined for figure 2 above

Figure 4 shows a reverse osmosis system incorporating a pump and motor unit as previously described. An inlet solution flow at low pressure enters the pump and motor unit 40 through pump inlet port 41 and leaves the pump through pump outlet port 42 at high pressure. The inlet solution then enters a membrane assembly 43. A proportion the solvent, but little of the solute, passes through a semi-permeable membrane 44 and leaves the membrane through outlet 45. The remaining flow of concentrated solution leaves the membrane assembly at high pressure, enters the pump through the motor inlet port 46, and leaves the pump through motor outlet port 47 at low pressure. The ratio of piston rod area divided by piston area needs to match the ratio of solvent flow through the membrane divided by solution flow into the membrane assembly. The pump could also be applied to ultrafiltration, using a system as described above for reverse osmosis, but having a filter medium in place of the semi-permeable membrane.

Claims

1 A fluid pump and motor unit consisting of a piston within a cylinder and mounted on a piston rod, said piston rod being caused to reciprocate by suitable means, a first face of said piston pumping a first fluid flow and the second face of said piston driven by a second fluid flow, said first flow being controlled by first valves of non-return poppet type operated by the pressure differential across them, and said second flow being controlled by second valves of non-return poppet type in operational connection with said first valves, said piston configured to have limited axial travel relative to said piston rod and separately limited axial travel relative to its surrounding cylinder.

2 A unit as claimed in claim 1 in which the axial travel of the piston relative to its surrounding cylinder is limited by end stop means between said piston and said cylinder.

3 A unit as claimed in claim 2 in which said end stop means incorporate elastic means to absorb and return kinetic energy

4 A unit as claimed in claim 1, 2 or 3 in which the means limiting axial travel of the piston relative to the piston rod incorporate elastic means to absorb and return kinetic energy

5 A fluid pump and motor unit consisting of a piston within a cylinder and mounted on a piston rod, said piston rod being caused to reciprocate by suitable means, a first face of said piston pumping a first fluid flow and the second face of said piston driven by a second fluid flow, said first flow being controlled by first valves of non-return poppet type operated by the pressure differential across them, and said second flow being controlled by second valves of non-return poppet type in operational connection with said first valves, said piston being mounted on said piston rod by force limiting means limiting the axial force applied by the rod to the piston and allowing axial travel of the piston relative to the rod only when a predetermined force is exceeded.

6 A unit as claimed in claim 5 in which a said force limiting means includes an elastic element restrained between end stops attached to the piston rod.

7 A fluid pump and motor unit consisting of a piston within a cylinder and mounted on a piston rod, said piston rod being caused to reciprocate by suitable means, a first face of said piston pumping a first fluid flow and the second face of said piston driven by a second fluid flow, said first flow being controlled by first valves of non-return poppet type operated by the pressure differential across them, and said second flow being controlled by second valves of non-return poppet type in operational connection with said first valves, the moving element of each said first valve incorporating a first part controlling said first fluid flow, and a second part responsive to the pressure differential across said first valve, said second part having operational connection to said second valves controlling said second fluid flow

8 A unit as claimed in claim 7 in which said first part of said moving element is an annular sleeve and said second part is a plug configured to slide within said sleeve.

9 A unit as claimed in claim 7 or claim 8 in which said operational connection is a mechanical linkage

10 A fluid pump and motor unit as claimed in any previous claim but having the top face of each piston impelled by a first fluid flow, and the bottom face of each piston impelling a second fluid flow.

11 A fluid pump and motor unit as claimed in any previous claim and having a plurality of pistons each operating within its own cylinder

12 A fluid pump and motor unit as claimed in any previous claim and incorporated into a reverse osmosis or ultrafiltration or similar system, said pump providing fluid flow to a high-pressure side of a membrane or filter medium and being partly powered by the fluid flow returning from said high pressure side.

PATENTS • DESIGNS • COPYRIGHT • TRADE MARKS
The Patent Office
INVESTOR IN PEOPLE

Application No: GB0508229.2 **Examiner:** Mr David Hotchkiss

Claims searched: 1 - 4 **Date of search:** 22 July 2005

Patents Act 1977: Search Report under Section 17

Documents considered to be relevant:

Category	Relevant to claims	Identity of document and passage or figure of particular relevance
A	Common subject matter	GB2391912 A (PEARSON) Whole document

Categories:

X	Document indicating lack of novelty or inventive step	A	Document indicating technological background and/or state of the art.
Y	Document indicating lack of inventive step if combined with one or more other documents of same category.	P	Document published on or after the declared priority date but before the filing date of this invention.
&	Member of the same patent family	E	Patent document published on or after, but with priority date earlier than, the filing date of this application.

Field of Search:

Search of GB, EP, WO & US patent documents classified in the following areas of the UKC^{X} :

F1W

Worldwide search of patent documents classified in the following areas of the IPC^{07}

F04B

The following online and other databases have been used in the preparation of this search report

Online: WPI; EPODOC