L. BESTER.

HYDROCARBON BURNER.

APPLICATION FILED NOV. 4, 1918.

1,322,999.

Patented Nov. 25, 1919.

2 SHEETS—SHEET 1.

Fig. 1.

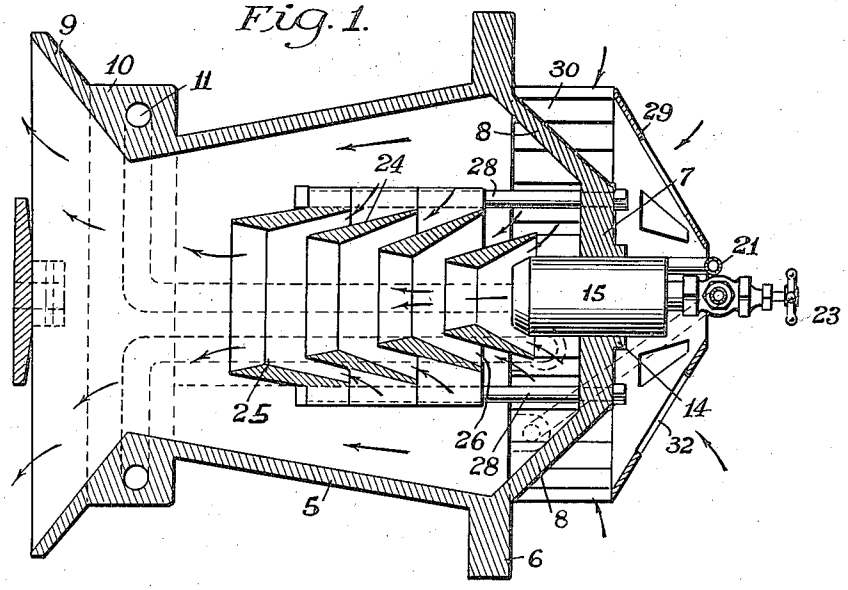

Fig. 2.

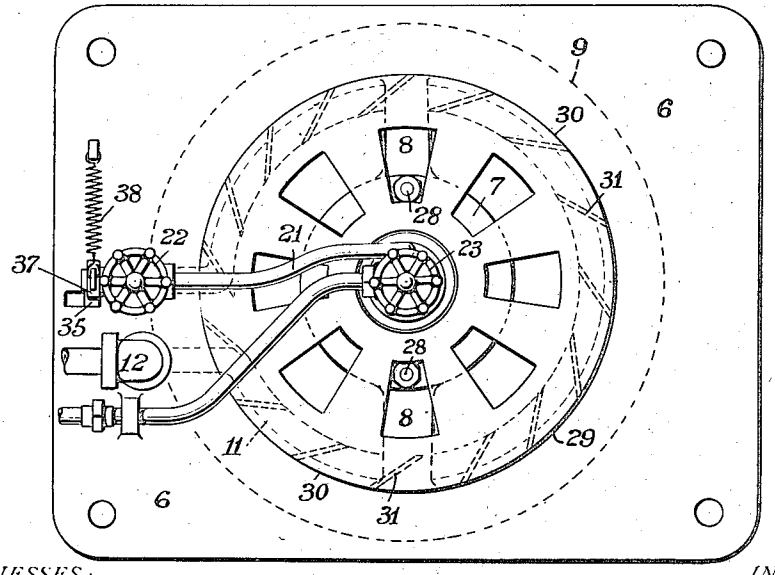

WITNESSES:

G. P. Lingelbach

INVENTOR.

Leonard Bester

BY

William Thomas Turner

ATTORNEY

L. BESTER.

HYDROCARBON BURNER.

APPLICATION FILED NOV. 4, 1918.

1,322,999.

Patented Nov. 25, 1919.

2 SHEETS—SHEET 2.

Fig. 3.

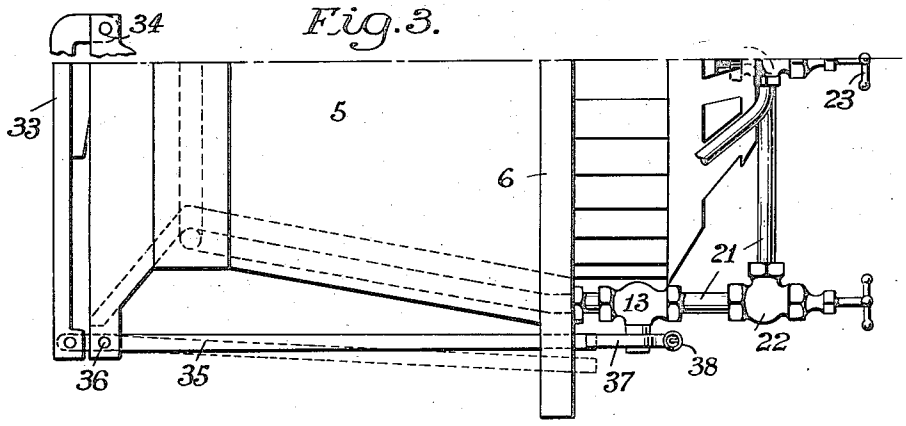

Fig. 4.

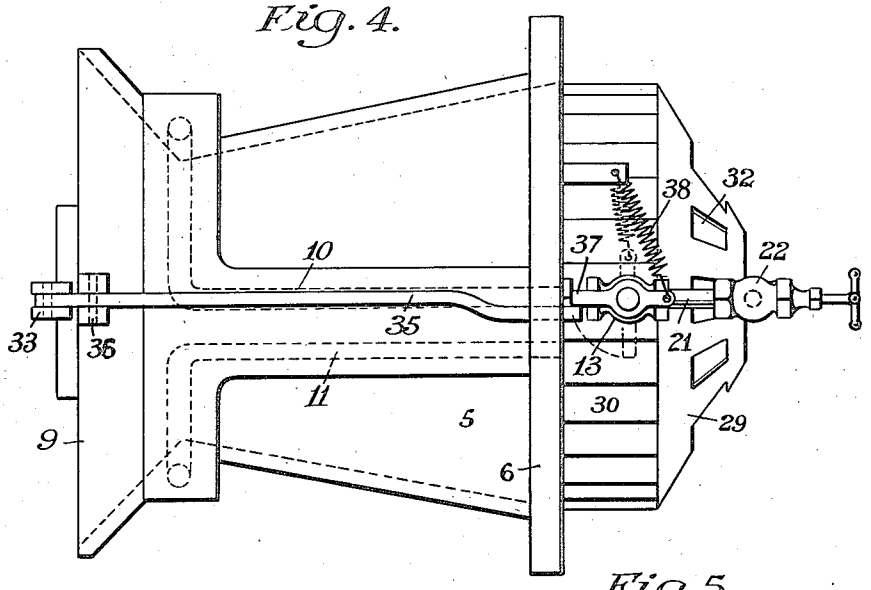

Fig. 5.

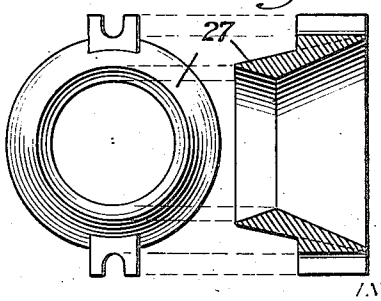

Fig. 6.

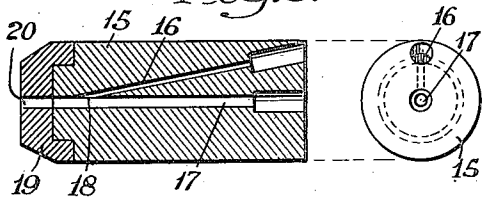

WITNESSES:

G. P. Kingsbury

INVENTOR.

Leonard Bester

BY

William Thomas Jones

ATTORNEY

UNITED STATES PATENT OFFICE.

LEONARD BESTER, OF NEW YORK, N. Y., ASSIGNOR TO UNITED STATES OIL BURNER CORPORATION, OF NEW YORK, N. Y., A CORPORATION OF NEW YORK.

HYDROCARBON-BURNER.

1,322,999. Specification of Letters Patent. Patented Nov. 25, 1919.

Application filed November 4, 1918. Serial No. 261,024.

To all whom it may concern:

Be it known that I, LEONARD BESTER, a subject of Austria, residing at No. 575 Riverside Drive, in the county of New York and State of New York, have invented certain new and useful Improvements in Hydrocarbon-Burners; and I do hereby declare the following to be a full, clear, and exact description of the invention, such as will enable others skilled in the art to which it appertains to make and use the same.

My invention relates to an improved hydrocarbon burner, and the novel features thereof are hereinafter described, embraced within the scope of the appended claims, and illustrated in the accompanying drawings.

In said drawings,

Figure 1 is a longitudinal sectional view of the burner.

Fig. 2 is a front elevation of the burner.

Fig. 3 is a top plan view of approximately one-half of the device.

Fig. 4 is a side elevation of the burner.

Figs. 5 and 6 are detail views, respectively, of one of the mixing elements and the atomizer.

Generally, the invention comprises a main housing or casing having a flame opening at one end and an air and hydrocarbon supply at the opposite end, in combination with an interposed mixing device consisting of a plurality of nested venturi-shaped elements, between which the additional air required for perfect amalgamation of the air and hydrocarbon is automatically and forcibly introduced. Around the flame opening, I form an air passage which communicates with the point of initial air and fuel supply, in this manner providing for preheating the air alone, in contra-distinction to preheating the air and fuel, or the fuel alone, which latter practice invariably leads to the formation of carbon—the recognized cardinal enemy in the art of oil burners. I have also devised an automatic control for the air supply whereby the burner will be rendered temporarily inoperative, in the event of flame becoming accidently extinguished. These constitute the salient features of my invention. Other advantages, arising from certain details of construction and arrangement, will be apparent from the following explanation.

Referring specifically to the drawings, 5 denotes a housing having a general contour of a truncated cone, and formed at one end with an outwardly extending rectangular flange 6 and a reduced circular plate 7 suitably spaced by the converging extensions 8, while the opposite end is annularly flared, as at 9. Exteriorly of the housing, and preferably formed integral therewith, is an additional thickness or ridge of metal 10 which is disposed longitudinally from the forward to the rearward portion of the housing, and then at right angles circumferentially of the housing immediately adjacent the flared head 9. This ridge is provided with a bore 11 having connection at its inlet end with an elbow 12 which in turn communicates with a suitable source of compressed air supply (not shown). At its outlet end the bore coöperates with a thermostatic valve 13 to be presently described.

The plate 7 has a concentric opening 14 in which is projected an atomizer 15 having one passage 16 for air and another passage 17 for fuel. Both passages intersect at 18, and, if desired, a cap 19 may be added to secure the most advantageous degree of atomizing opening, as 20. The air opening of the atomizer is connected to the thermostatic valve 13 by a pipe line 21, which is intercepted by a manually operable valve 22. Fuel supply may be conveniently controlled by the valve 23.

Directly in front of the inner end of the atomizer, or axially of the main housing is arranged the mixing device. It comprises a plurality of substantially conoidal-shaped hollow members 24, each provided with a Venturi passage 25. The members progressively increase in size from outer to the inner one and are spaced apart, as at 26, in nested or telescopic relationship. A very simple and effective way in which to establish and maintain this organization is by forming slotted lugs 27 upon diametrically opposite sides of each member, and then simultaneously clamping all of the members together by means of two bolts 28 engageable with the plate 7. (See Figs. 1 and 5.)

The front of the housing may be inclosed by a shield 29, which serves to put a finishing touch upon the burner, as well as provide for the introduction of atmospheric air to support combustion, as by the openings 30 between the vanes 31, and the radially arranged openings 32.

Disposed transversely of the open flared head of the housing is a bar 33. This bar serves in a dual capacity. Firstly, it divides and diffuses the flame which issues through the opening and secondly, operating on the principle of expansion and contraction, it controls the supply of air to the atomizer. Upon inspection of Figs. 1, 3 and 4, it will be seen that the bar is pivoted to an ear 34 on one side of the flared head, and at its other end it is secured to a rod 35 pivoted to a similar ear 36 of said head. The rod is free at its opposite terminal and normally engages an arm 37 of the valve 13 to insure a supply of air to the atomizer. However, should the flame become extinguished accidentally, rod 35 would move into approximately the position shown in dotted lines in Fig. 3 thereby tripping the arm 37, which would then be forced into the position exhibited in dotted lines of Fig. 4, by the spring 38.

In practice, compressed air and fuel are fed to the atomizer by an appropriate manipulation of, respectively, the valve 22 and the valve 23. The air and fuel issuing from the atomizer, and the fuel being in the form of a fine spray, are thus subjected to an initial mixing. This mixing, however, is further supplemented by the air rushing in between the members 24 of the main mixing device, it being manifest that the force of the atomization of the air and fuel from the atomizer will be amply sufficient to produce a suction for this purpose. A most thorough breakng-up of the fuel, and admixing of the fuel with air ensues. Specifically, the reason for this coalescence is the fact that during the major portion of the path of travel of the fuel and air, they are subjected to a plurality of blasts of air, each of which functions definitely to break-up a portion of the gas. Should the fuel consist of one of the heavier hydrocarbons, or due to any other conditions, the gas is not attenuated to the maximum degree after leaving the mixing device, an additional quantity of air is available between the innermost member 24 and the burner head for this purpose.

While in the experiments which I have conducted, a mixing device comprising four members 24, gives the best results, contingencies might arise which would alter this arrangement, and, consequently, I do not desire to be limited to any number. In any event, the mixture is ignited at the head 9, and at this point is directed upon opposite sides of the bar 33, the flame being light blue in color and giving forth an intense heat, thus indicating perfect combustion. The proximity of the annular part of the ridge 10, with its air passage 11, to the head obviously quickly superheats the air so that very shortly after the mixture has been ignited, the air which enters the atomizer is preheated—which contributes additionally to perfect combustion. Also, due to the heating of the air alone, the formation of carmon in the passage 10 and in the atomizer, is positively eliminated.

What is claimed is:

1. A mixing device for air and hydrocarbon comprising a frusto-conical housing, a flared extension on the smaller end of said housing, a ridge at the intersection of said housing and extension formed with a circumferentially extending bore and an atomizer at the larger end of the housing, means for conducting compressed air through said bore and then to the atomizer.

2. A mixing device for air and hydrocarbon as embodied in claim 1, and means for automatically discontinuing the supply of compressed air to the atomizer when the flame is extinguished.

3. A mixing device for air and hydrocarbon as embodied in claim 4, said means being thermally controlled.

4. A mixing device for air and hydrocarbon as embodied in claim 3, said means comprising a bar spanning the flared extension, a valve interposed between the atomizer and said bore and biased to closed position, and means for operatively connecting the bar to said valve to normally maintain the latter in open position against its bias and to allow the valve to close under the action of its biasing means when the flame is extinguished.

In testimony whereof I hereunto affix my signature.

LEONARD BESTER.