Dec. 30, 1947. N. M. MARSILIUS 2,433,617

REMOVABLE GUIDE PIN

Filed Aug. 3, 1946

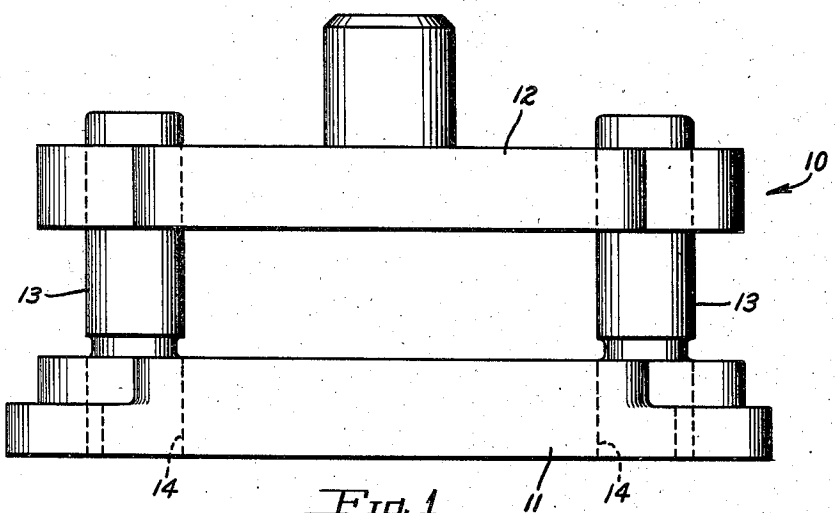

Fig. 1

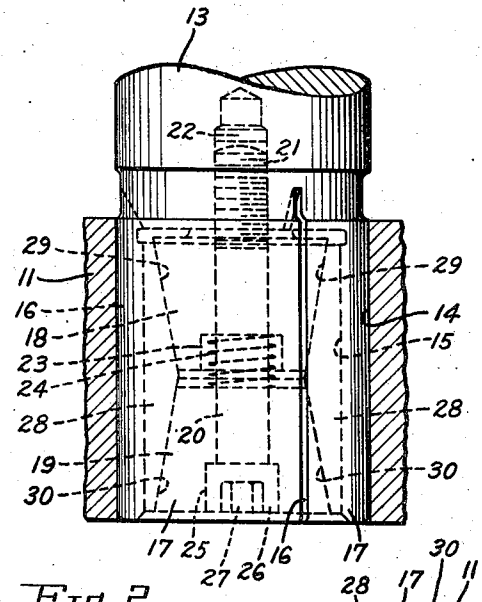

Fig. 2

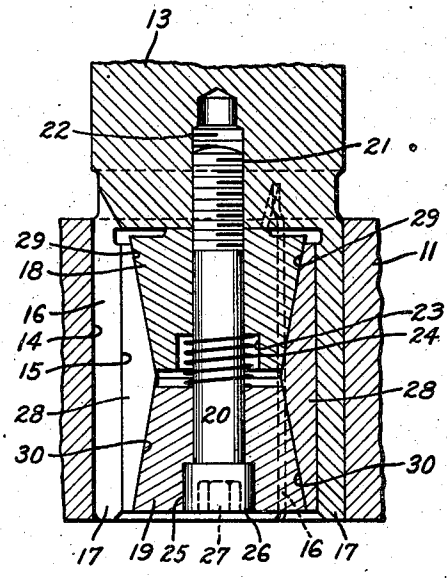

Fig. 3

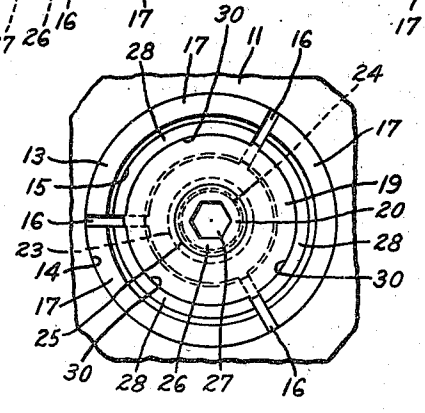

Fig. 4

INVENTOR
NEWMAN M. MARSILIUS
BY John H. Hanahan
ATTORNEY

Patented Dec. 30, 1947

2,433,617

UNITED STATES PATENT OFFICE

2,433,617

REMOVABLE GUIDE PIN

Newman M. Marsilius, Trumbull, Conn.

Application August 3, 1946, Serial No. 688,381

3 Claims. (Cl. 164—118)

1

This invention relates to new and useful improvements in removable guide pins and has particular relation to removable guide pins for use in the beds of die-sets and the like.

The objects and advantages of the invention will become apparent from a consideration of the following detailed description taken in connection with the accompanying drawing wherein a satisfactory embodiment of the invention is shown. However, it is to be understood that the invention is not limited to the details disclosed but includes all such variations and modifications as fall within the spirit of the invention and the scope of the appended claims.

In the drawing:

Fig. 1 is a front elevational view of a die-set provided with removable guide pins constructed in accordance with the present invention;

Fig. 2 is an enlarged view showing a portion of the die-set bed in section and showing the lower portion of a guide pin in elevation in an opening in such bed;

Fig. 3 is a view similar to Fig. 2 but with the illustrated portion of the guide pin in central vertical section; and

Fig. 4 is a bottom plan view of a portion of the die-set bed with a guide pin locked therein.

Heretofore means have been provided for removably securing guide pins to the beds of die-sets and the like. The present invention provides means for effectively securing guide pins to the beds of die-sets and the like and which means is of simple construction and easy to operate and is adapted to bring about tight engagement between portions of the pins and portions of the bed of the die-set over a considerable area whereby the pins are securely fastened in place. Yet the present means is such that removal of the pins from the bed is a simple operation which may be rapidly performed.

Referring in detail to the drawing, at 10 is generally indicated a die-set including a bed 11 and a punch holder 12 adapted to be reciprocated from and toward the bed. Such movement of the punch holder is held in a definite path since the punch holder is movable along guide pins 13, the lower end portions of which are removably fixed in holes 14 provides in the bed 11.

As here disclosed, the holes 14 are cylindrical and the lower end portions of the pins 13 are shaped to fit such holes. Each pin in its lower end portion is provided with a central opening 15 and is slotted through its walls as at 16 whereby the lower end portion of each pin comprises a

2

plurality of flexible sections 17 each curved transversely on both its outer and inner surfaces.

Within the central opening 15 of each pin are inner and outer truncated cones 18 and 19 arranged with their smaller diameter end portions in opposing relation. A locking bolt 20 passes through the cones 18 and 19 and is threaded as at 21 into a tapped socket or opening 22 in the pin 13. Surrounding the mid-portion of bolt 20 and located partially in a socket 23 within the cone 18 is a coil spring 24 constantly attempting to separate the cones and maintaining the inner end of cone 18 against the inner end wall of the opening 15.

As shown, the cone 19 in its outer end is provided with a socket 25 receiving the head 26 of the bolt 20 and such bolt head is itself provided with a socket 27 for the reception of an Allen wrench or other turning tool. Since the bolt head 26 is within the socket 25, no part of the bolt projects below the lower side of bed 11 and the latter may be supported on any suitable support.

The truncated cones 18 and 19 are of substantially less diameter than the central opening 15 and a series of inserts 28 are located within such opening and about the cones. Preferably the inserts 28 are provided in a number equal to the number of flexible sections 17 into which the end portion of pin 13 has been divided by the slots 16. Each insert 28 is longitudinally straight on its outer side but is transversely curved so that it is a segment.

On its inner side each insert has an inner tapered portion 29 and an outer tapered portion 30. These tapers are from the ends of the inserts toward their mid-portions whereby they have thickened mid-portions. The arrangement is such that the inner tapers 29 of the inserts are engaged by the side walls of surfaces of the cone 18 while the outer tapers 30 of the inserts are engaged by the side walls or surfaces of cone 19.

Since the cone 19 is held within the central opening in the lower end portion of a pin 13 by the bolt head 26, it will be clear that such cone may not drop from the end of the pin. When the cone 19 is held in place its outer tapered surface being in engagement with the outer tapered surface 30 of the inserts 17, such inserts may not fall from their positions within the opening 15.

At this time, if the pin is not in use, bolt 20 may be somewhat unscrewed so that there is no radial or lateral pressure on the flexible sections

17. Under such circumstances, the whole lower end portion of the pin may be introduced into a hole 14 in the bed of the die-set. After the pin is thus positioned, a suitable tool is applied to rotate the bolt 20 and the tool may be introduced into the socket 27 of the head of the bolt.

At this time, the spring 24 will be maintaining the cone 18 against the inner end of the opening 15 or will be attempting to so maintain said cone. As the bolt is tightened it draws inwardly on the cone 19 and the tapered sides of the latter engaging the outer tapers 30 of the inserts tend to shift said inserts longitudinally. That is, there is a tendency to force the inner end portions of the inserts laterally or radially due to engagement of their tapers 29 with the outer tapered surface of the cone 18.

At the same time, the inward movement of the cone 19 is applying an equal lateral or radial pressure to the tapered surfaces 30 of the inserts. Thus a radial or lateral pressure is applied to both the inner and outer portions of the inserts as the bolt 20 is tightened and this lateral or radial pressure is against the flexible segments 17 and results in the latter being forced tight against the surfaces of the hole 14. Thus, the flexible sections are forced into tight engagement with the sides of the hole 14 over substantially the depth of such hole so that there is not a binding of said sections against the walls of the hole at one place and a spacing of the sections from such holes at another place.

Specifically, the entire area of engagement between the sections 17 and the walls of the holes 14 is not at the outer or free ends of said sections. Substantially equal pressure is applied to the sections over the area of the double tapered inserts so that a substantial binding action over a relatively large area is established between the flexible sections 17 and the side walls of the hole 14.

It will be understood that each of the guide pins of the die-set will be fastened to the bed of the die-set in the described manner. When it is desired to remove the pins from the die-set bed, bolt 20 is rotated in the opposite direction to permit of outward movement of the cone 19 and to relieve the pressure on the inserts and the cone 18. In such instance, the spring 24 tends to move the cone 19 outwardly as the bolt is unscrewed. Thus, it will be seen that the bolt 20 serves to hold the various parts in assembled relation and that a limited turning of the bolt in one direction will lock the pin to the bed of a die-set and a limited turning of the bolt in the opposite direction will permit of the return of the flexible sections 17 to their normal positions so that the bolt may be removed from the bed of the die-set.

Having thus set forth the nature of my invention, what I claim is:

1. A removable guide pin for use in the bed of a die-set and the like, said pin including an elongated body having a central opening in one end and having radial slots through its sides from said opening whereby such end comprises a series of flexible sections, inner and outer truncated cones in said opening and having their smaller ends in opposing relation, a series of inserts in said opening between said cones and said sections, each of said inserts longitudinally straight and transversely curved in its outer surface and on its inner surface tapered from its inner and outer ends to a thickened center, said inserts having their respective inner and outer tapered portions engaging the respective inner and outer cones, and a bolt passing through said cones and threaded into said pin and adapted to be tightened to draw the outer of said cones toward the inner thereof and through said inserts expand said flexible sections radially outwardly.

2. A removable guide pin for use in the bed of a die-set and the like, said pin including an elongated body having a central opening in one end and having radial slots through its sides from said opening whereby such end comprises a series of flexible sections, inner and outer truncated cones in said openings and having their smaller ends in opposing relation, a series of inserts in said opening between said cones and said sections, each of said inserts longitudinally straight and transversely curved in its outer surface and on its inner surface tapered from its inner and outer ends to a thickened center, said inserts having their respective inner and outer tapered portions engaging the respective inner and outer cones, a spring between the opposed ends of said cones and maintaining the inner cone against the inner end of said opening, and a bolt passing through said cones and threaded into said pin and adapted to be tightened to draw the outer of said cones toward the inner thereof and through said inserts expand said flexible sections radially outwardly.

3. A removable guide pin for use in the bed of a die-set and the like, said pin including an elongated body having a central opening in one end and having radial slots through its sides from said opening whereby such end comprises a series of flexible sections, inner and outer truncated cones wholly within said opening and having their smaller ends in opposing relation, the inner of said cones having its larger end against the inner end of said opening, a series of inserts wholly within said opening between said cones and said sections, each of said inserts longitudinally straight and transversely curved in its outer surface and on its inner surface tapered from its inner and outer ends to a thickened center, said inserts having their respective inner and outer tapered portions engaging the respective inner and outer cones, a bolt passing through said cones and having its inner end threaded into said pin and said bolt adapted to be tightened to draw the outer of said cones toward the inner thereof and through said inserts expand said flexible sections radially outwardly, and the outer of said cones having a socket opening through its outer end and receiving the head of said bolt whereby the latter does not project beyond the adjacent end of said pin.

NEWMAN M. MARSILIUS.

REFERENCES CITED

The following references are of record in the file of this patent:

UNITED STATES PATENTS

Number	Name	Date
1,038,834	Bloom	Sept. 17, 1912
1,926,798	Baumbach	Sept. 12, 1933