Feb. 14, 1939. W. SCHAAKE 2,147,460

CURRENT COLLECTOR

Filed Sept. 13, 1935

Fig. 1.

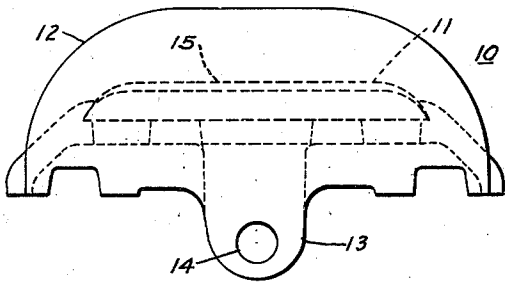

Fig. 2.

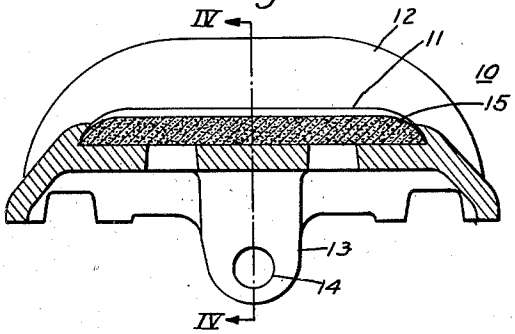

Fig. 3.

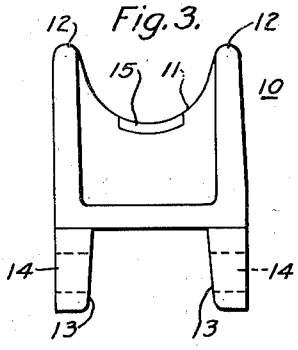

Fig. 4.

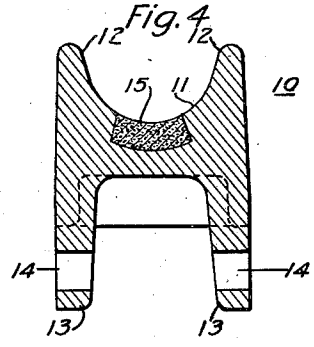

Fig 5.

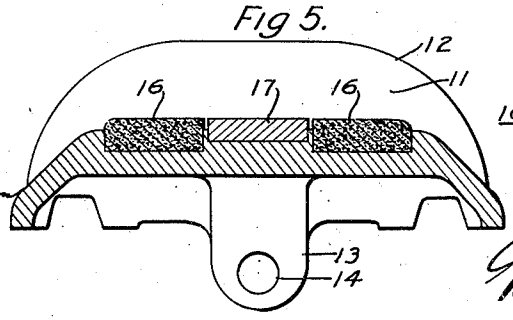

WITNESSES:

Fred. C. Williams

R.R. Lockwood

INVENTOR

William Schaake

BY

Crawford

ATTORNEY

Patented Feb. 14, 1939

2,147,460

UNITED STATES PATENT OFFICE

2,147,460

CURRENT COLLECTOR

William Schaake, Pittsburgh, Pa., assignor to Westinghouse Electric & Manufacturing Company, East Pittsburgh, Pa., a corporation of Pennsylvania

Application September 13, 1935, Serial No. 40,376

2 Claims. (Cl. 191—59.1)

My invention relates, generally, to current collecting equipment for electric vehicles. It has particular relation to slider shoes for engaging with and collecting current from trolley wires, and it constitutes an improvement over the trolley shoes of the type shown and described in my Patent No. 1,841,552, which is assigned to the assignee of this application.

In the trolley shoe shown in the aforesaid patent, a main body member is provided that is arranged to be cast around an insert which is composed of a metal different from and which may be harder than the trolley shoe itself. For example, in this patent, it is stated that a nitrided steel insert may be provided in order to prolong the life of the slider shoe.

When such a construction is used, I have found that there is considerable wear on the trolley wire, and that while the life of the slider shoe is materially prolonged, the resulting wear on the overhead system produces a factor which cannot be neglected. There is a tendency for the trolley wire to be rapidly worn out due to its engagement with the hardened steel surface, and as a result it must be replaced at relatively frequent intervals. This rapid wear of the trolley wire is due principally to the relatively great frictional force which is exerted on the trolley wire and which results from lack of a lubricating medium between the slider shoe and the trolley wire. Heretofore, it has not been possible to satisfactorily provide for lubricating a slider shoe to reduce the frictional forces between it and the trolley wire. Attempts have been made to provide a lubricating medium which is movable relative to the slider shoe. However, such equipment is expensive in initial cost and also in its upkeep. Furthermore, it adds to the weight of the pole-head supporting the slider shoe and is also objectionable for this reason.

There has been no practical solution in the past to the problem of collecting current from a trolley wire by means of a slider shoe, and at the same time providing for reducing the frictional forces therebetween by supplying a lubricant between the slider shoe and the trolley wire by the engagement of the slider shoe itself with the trolley wire.

It is, therefore, an object of my invention to provide a self-lubricated slider shoe for collecting current from a trolley wire which shall be simple and efficient in operation and which may be readily and economically manufactured and installed.

The principal object of my invention is to provide for collecting current from a trolley wire with a minimum of wear on the trolley wire and friction between it and the current collecting device.

An important object of my invention is to provide for simultaneously lubricating a trolley wire and collecting currents therefrom.

Another object of my invention is to provide for casting a lubricating and current conducting medium in a slider shoe which is disposed to engage and collect current from a trolley wire.

Another object of my invention is to provide a slider shoe for collecting current from a trolley wire having a non-metallic insert cast integrally with the shoe to engage the trolley wire.

Still another object of my invention is to provide a slider shoe for collecting current from a trolley wire having a graphitized carbon insert integrally formed with the shoe to engage the trolley wire.

Other objects of my invention will in part be obvious and in part appear hereinafter.

My invention accordingly is disclosed in the embodiment hereof shown in the accompanying drawing, and comprises the features of construction, combination of elements and arrangement of parts which will be exemplified in the construction hereinafter set forth, and the scope of the application of which will be indicated in the appended claims.

For a more complete understanding of the nature and scope of my invention, reference may be had to the following detailed description taken in connection with the accompanying drawing, in which:

Figure 1 is a view, in side elevation, of a slider shoe embodying the features of my invention;

Fig. 2 is a longitudinal cross-sectional view of the slider shoe shown in Fig. 1;

Fig. 3 is a view, in end elevation, of the slider shoe shown in Fig. 1;

Fig. 4 is a sectional view taken along the line IV—IV of Fig. 2; and

Fig. 5 is a sectional view of a modified form of the invention.

Referring now particularly to Fig. 1 of the drawing, the reference character 10 designates, generally, a slider shoe, the main body member of which may be of cast steel, cast bronze, cast aluminum or aluminum alloy. Any of these materials may be employed, as well as other suitable materials, depending upon the service conditions which are to be met by the slider shoe.

As illustrated in the drawing, the slider shoe 10 is provided with a centrally located groove 11,

the surface of which is arranged to engage a trolley wire (not shown). The groove 11 terminates in upwardly extending lips 12 which form the sides thereof. In order to mount the slider shoe 10 in a pole-head (not shown), depending ears 13 are integrally formed with the body member and are provided with openings 14 through which a suitable bolt or shaft may be positioned for securing it to the pole-head.

In order to reduce the resulting wear on the trolley wire to a minimum and also to provide for collecting current therefrom, I have provided for casting an insert 15 integrally with the body member of the slider shoe 10, which may be non-metallic in composition and which inherently provides a certain amount of lubricating effect as the slider shoe 10 is moved along the trolley wire. In particular, I have employed an insert 15 which is composed of carbon and also an insert which is composed of graphitized carbon. By the term "graphitized carbon" I mean a material composed principally of carbon but having thoroughly intermixed therewith graphite, which I have found constitutes a suitable composition to provide the required amount of lubricating effect between the slider shoe 10 and the trolley wire. In the event that it is desired to increase the conductivity of the insert 15 beyond the degree which may be obtained when carbon or graphitized carbon is used, the insert 15 may also have uniformly mixed therethrough a small amount of copper. By this means it is possible to increase the conductivity of the insert 15 and at the same time retain its lubricating qualities due to the fact that it is composed of carbon or has provided therewith a certain amount of graphite.

Referring now particularly to Fig. 5 of the drawing, it will be observed that the shoe 12 has embedded along the groove 11 two inserts 16 and another insert 17 centrally located therebetween forming what may be termed as a "composite insert". The inserts 16, for example, may be composed of carbon, graphitized carbon, or copper graphitized carbon, as set forth hereinbefore, while the insert 17 may be composed of nitrided steel or other hardened material, as set forth in my aforesaid patent. It will be understood that the insert 17 may be composed of carbon in its various combinations, and that the inserts 16 may be composed of hardened material.

When the composite insert is used, it is possible to combine the wearing qualities of the slider shoe described in my patent and at the same time to obtain the lubricating qualities which are desirable to reduce the wear on the overhead. When the slider shoe 12 is composed of aluminum or aluminum composition, an extremely desirable combination is provided, since the shoe itself is light in weight, has exceptionally long life because of the hardened insert or inserts, and is provided with lubricating qualities through the use of the carbon or carbon combination inserts.

In constructing the slider shoe of the types set forth herein, I preform the insert 15 or the inserts 16 and 17 and then position it or them in the mold in which the molten metal is poured of which the body member is formed. Due to the fact that the carbon insert 15 has a relatively high melting point, as well as the inserts 16 and 17, it is possible to readily cast them in the shoe so that a unitary construction will be provided.

When the slider shoe 10 is composed of aluminum, the weight thereof is materially reduced as compared with the weight when steel or other heavy metals are used. Furthermore, the wear on the trolley wire is reduced when the shoe 10 is composed of aluminum and an insert such as the carbon insert 15 is employed. This is due to the fact that the ends of the groove 11 are soft and do not dig into the trolley wire as the shoe passes from underneath special overhead fittings such as frogs, cross-overs and the like onto the trolley wire. It will, therefore, be observed that it is advantageous to construct the shoe 10 of a light and soft metal such as aluminum and to provide in it an insert 15 either cast integrally therewith or secured in a suitable manner thereto and composed of the materials set forth hereinbefore or composed of a hardened insert such as is shown in my aforesaid patent.

I have found that slider shoes of the type set forth herein may be readily constructed on a production basis in an economical and efficient manner. Due to the fact that the insert 15 is cast integrally with the body member of the shoe 10, there is no likelihood that it will become broken or disengaged therefrom. I have found that it will remain in place and without breaking during the life of the shoe. I have also found that the insert 15 when composed of carbon, graphitized carbon or copper graphitized carbon has a remarkably long life, while at the same time the wear on the trolley wire is reduced to a point where it is substantially negligible. It will, therefore, be understood that I have provided a slider shoe which is relatively cheap in construction, but extremely durable and having a long life, and which will cause substantially no wear on the trolley wire with which it engages for the collection of current.

Since the construction herein may be altered without departng from the scope of the invention, it is intended that all matter set forth in the foregoing description or shown in the accompanying drawing shall be interpreted as illustrative and not in a limiting sense.

I claim as my invention:

1. A slider shoe for collecting current from a trolley wire comprising an aluminum composition body member provided with a longitudinal groove adapted to engage the trolley wire, and a plurality of fixed inserts formed integrally with the shoe disposed in the bottom of said groove for engaging said trolley wire, certain of said inserts comprising a material having lubricating qualities and the remainder of said inserts comprising a hardened metallic composition.

2. A slider shoe for collecting current from a trolley wire comprising an aluminum composition body member provided with a longitudinal groove disposed to engage the trolley wire, and a plurality of fixed inserts cast integrally with said body member along the bottom of said groove for engaging said trolley wire, certain of said inserts comprising a material having lubricating qualities and the remainder of said inserts comprising a hardened metallic composition.

WILLIAM SCHAAKE.