Dec. 22, 1964 P. S. FLETCHER 3,162,483

ROCKER CHAIR WITH T-CUSHION SEAT CONSTRUCTION

Filed Jan. 16, 1961 2 Sheets-Sheet 1

FIG. 1.

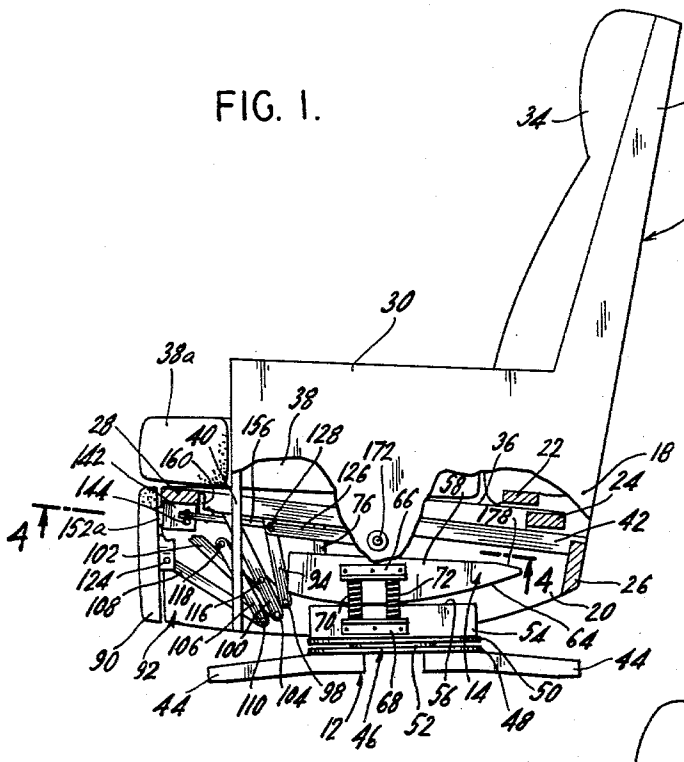


FIG. 2

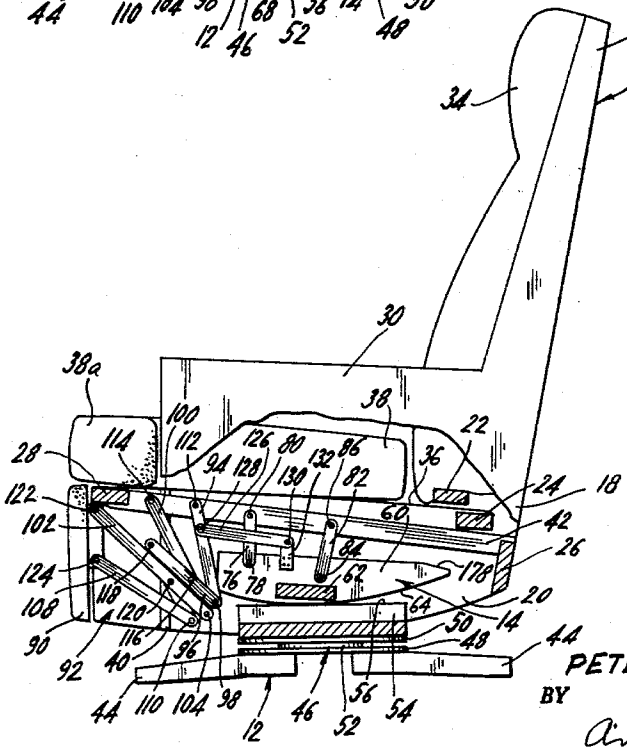


INVENTOR.
PETER S. FLETCHER
BY
Amster & Levy
ATTORNEYS

Dec. 22, 1964 P. S. FLETCHER 3,162,483

ROCKER CHAIR WITH T-CUSHION SEAT CONSTRUCTION

Filed Jan. 16, 1961 2 Sheets-Sheet 2

FIG. 3.

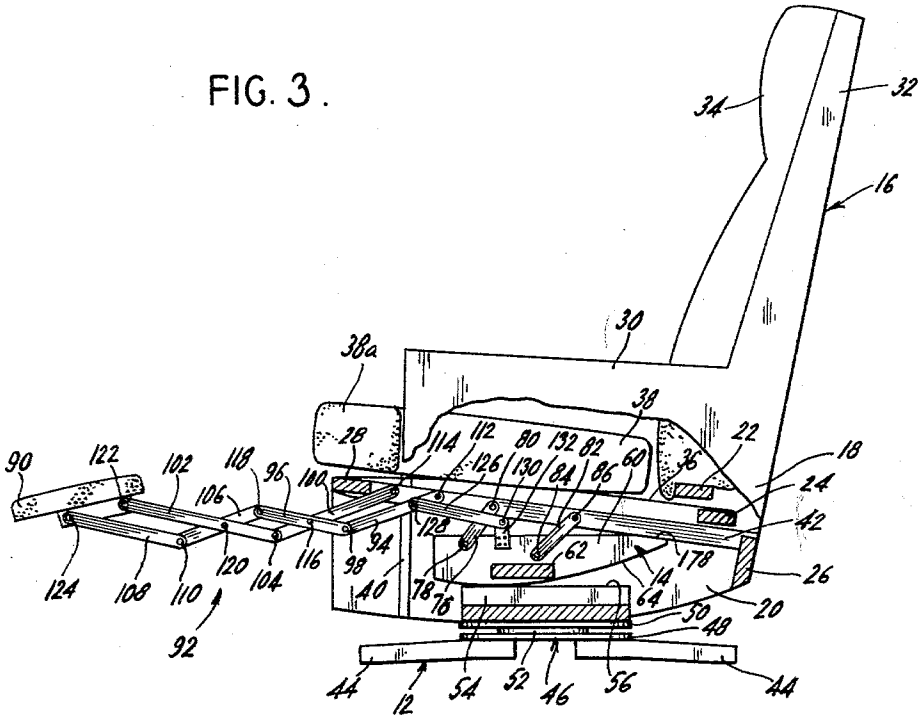


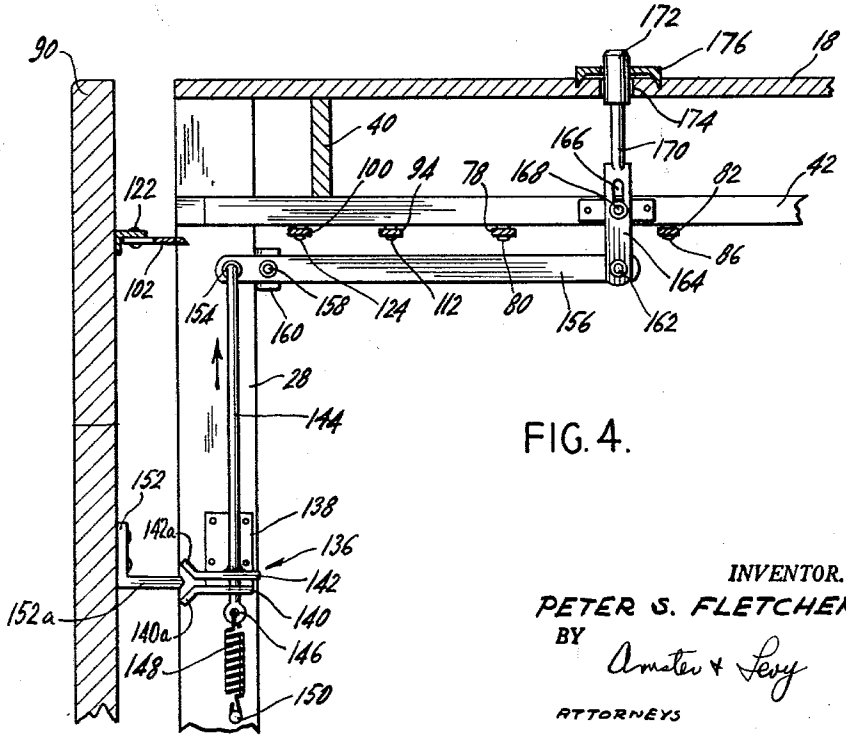


FIG. 4.

INVENTOR.
PETER S. FLETCHER
BY
Amster & Levy
ATTORNEYS

United States Patent Office 3,162,483 Patented Dec. 22, 1964



3,162,483

# ROCKER CHAIR WITH T-CUSHION SEAT CONSTRUCTION

Peter S. Fletcher, Delray Beach, Fla., assignor to Anton Lorenz, Boynton Beach, Fla.

Filed Jan. 16, 1961, Ser. No. 82,892
9 Claims. (Cl. 297—89)

The present invention relates to improvements in reclining chairs, and in particular to a rocker type of reclining chair which includes a leg-rest movable between a retracted position and an extended, leg-supporting position. The chair has a first or normal sitting position with the leg-rest retracted and may be rocked in this position, and a second sitting position with the leg-rest extended and in which the chair may also be rocked.

In reclining chairs and rocker chairs of the aforementioned type, the movement of the leg-rest is achieved by movement of the seat and back-rest relative to the chair frame. The arms of the chair are conventionally made as part of the chair frame, resulting in rearward movement of the seat relative to the arms. Such movement makes it impossible to incorporate in the chair a T-cushion or a seat having a T-shape design.

Modern styling requirements often call for the use of T-cushion construction of chair seats, by which is meant a seat which in plan view has a generally T-shape. The front end of the seat has laterally-projecting portions at its sides, which portions overlap or extend across the front of the chair arms. Such T-cushion styling may be utilized in the seat itself or in a loose cushion resting on the seat.

To conform to such styling requirements, it is desirable to employ T-cushion type seats or loose T-cushions in chairs of the automatic reclining type or in rocker chairs of the reclining type. This is not possible where the seat moves rearwardly relative to the chair arms because the arms block rearward movement of the laterally-projecting portions of the T-cushion.

It is an object of the present invention to overcome the aforementioned difficulty by providing a novel chair construction which permits the chair arms to be made as part of the seat and back-rest structure, whereby the seat does not move relative to the chair arms. The seat may thus have a T-cushion type construction or may be covered with a loose T-cushion.

In accordance with the invention, there is provided a chair having a body-supporting structure including a back-rest, a seat of the T-cushion type, and chair arms all formed rigidly with each other. The body-supporting structure is mounted on a rocker member, which in turn is mounted for rocking movement on a base. The control means which mounts the body-supporting structure on the rocker member is so arranged as to move the body-supporting structure rearwardly automatically relative to the rocker member from a first stable sitting position to a second stable sitting position. The chair also includes a leg-rest mounted for movement between a retracted position beneath the seat and an extended position forwardly of the seat, in response to movement of the body-supporting structure relative to the rocker member. Manually-releasable locking means are also provided to hold the chair in its first stable position wherein the body-supporting structure may be rocked on the base with the leg-rest retracted. When the locking means is released, the body-supporting structure automatically moves to the



second stable position wherein it may be rocked on the base with the leg-rest extended and supporting the outstretched legs of the occupant.

Another object of the invention is the provision of a chair of the character described in which the seat control means is so arranged as to cooperate with the center of gravity of the body-supporting structure to move the latter rearwardly automatically upon release of the locking means, thus eliminating the normal requirement that the occupant push upon the chair arms to start the rearward movement of the seat and back-rest.

A further object of the invention is the provision of a chair of the character described in which the leg-rest actuating means is so arranged and constructed as to cause the leg-rest to be moved to its extended position in response to a small rearward movement of the body-supporting structure.

Additional objects and advantages of the invention will become apparent during the course of the following specification when taken in connection with the accompanying drawings in which:

FIG. 1 is a side elevational view, with portions broken away and shown in section, of a rocker chair made in accordance with the invention and shown in its first stable sitting position with the leg-rest retracted;

FIG. 2 is a central longitudinal section through the chair in the position of FIG. 1;

FIG. 3 is a section similar to FIG. 1, but showing the chair in its second stable sitting position with the leg-rest extended; and

FIG. 4 is an enlarged section taken along line 4—4 of FIG. 1 and showing the locking mechanism of the chair in bottom plan view.

Referring now specifically to the drawings, there is shown in FIGS. 1–3 a rocker chair constructed in accordance with the present invention and comprising a base 12, a rocker member 14 supported on the base 12, and a body-supporting structure 16 mounted on the rocker member 14.

Unlike the usual reclining chairs or rocker chairs of the reclining type, the body-supporting structure 16 in accordance with the present invention includes a seat, back-rest, side frames and chair arms all formed rigidly as a single unit. Specifically, the body-supporting structure 16 includes a pair of side frames 18 and 20 which are spaced from each other and are interconnected by cross-bars or braces 22, 24, 26 and 28. Each side frame 18 and 20 has an upper portion 30 of lesser length than the front-to-rear dimension of the chair and forming a chair arm. At its rear end, each side frame 18 and 20 is formed with an upstanding rigid post 32 forming the side of a back-rest frame. This frame is padded and covered with fabric, leather, or the like, to provide an upholstered back-rest 34. The cross-bar 22 serves to support the springs in the back-rest and also for tacking the back-rest cover.

The cross bars 24 and 28 serve as a support for a rigid seat platform 36 which is rigidly connected therebetween. The platform 36 supports an upholstered seat 38, which in the illustrative embodiment herein is in the form of a loose T-cushion. The term "T-cushion" in the furniture trade means a cushion which, in plan view, presents a T-shape, having at its front end laterally-projecting portions which overlie the front edges of the chair arms. Thus, when viewed from the front, the T-cushion has the appearance of extending from one side edge of the chair

to the other. The seat 38 is in the form of such T-cushion and has front end portions 38*a* which project laterally outwardly from the side edges of the seat body. It is to be understood, however, that instead of being in the form of a separate cushion, the seat 38 may be formed integrally with the upholstered back-rest 34, but would still be made of the same T-shape.

A frame member 40 extends transversely inwardly from the front edge of the upper arm portion 30 of each side frame 18 and 20. These frame members 40 are spaced rearwardly of the front end of the chair and extend inwardly to points adjacent the side edges of the seat 38. The laterally projecting portions 38*a* of the seat extend across the forward surfaces of the respective frame members 40 as indicated in FIG. 1.

The body-supporting structure 16 also includes at each side a linkage mounting rail 42, the ends of which are secured to the cross-bars 26 and 28. Each rail 42 extends from the front to the rear of the chair and is preferably spaced inwardly from the adjacent side frame to provide room for the rocker springs, links, etc. of the chair.

The base 12 is illustrated in the form of a pedestal having a plurality of legs 44 which extend radially and downwardly from a swivel assembly 46. The swivel assembly 46 is of conventional construction and comprises a stationary plate 48 serving as a stationary raceway and secured to legs 44, and a movable plate 50 serving as a movable raceway and connected to the stationary plate 48 by a ball bearing assembly 52 of the usual type. A base member 54 is secured to the upper swivel plate 50 and has a rocker supporting surface 56 on its upper face.

The rocker member 14 is formed by a pair of spaced rocker elements 58 and 60 located on opposite sides of the chair and connected by a cross-rail 62 (FIG. 2). Each rocker element 58 and 60 has an arcuate rocker surface 64 at its bottom edge which rests upon and engages the rocker supporting surface 56 of the base member 54.

Secured to the outer side of each rocker element 58 and 60 is an angle bracket 66. A similar angle bracket 68 is secured to each outer surface of the base member 54 in alignment with the respective bracket 66. Between each pair of brackets 66 and 68 is mounted a pair of tension springs 70 and 72. The ends of springs 70 and 72 are secured to the laterally-projecting flanges of brackets 66 and 68, and the springs serve as means to connect the rocker member 14 with the base member 54 to provide a force against which the rocker member and body-supporting structure may be rocked, and to bring the latter members to a level position of equilibrium as shown in FIGS. 1 and 2.

A control linkage mounts the body-supporting structure 16 on the rocker member 58 for rearward movement relative to the latter from the first or normal sitting position of FIGS. 1 and 2 to the second or tilted sitting position of FIG. 3. In this illustrative embodiment, the control linkage includes a front guide link 76 disposed in a substantially upright position and having a pivotal mount 78 at its lower end on the rocker member 58 and a pivotal connection 80 at its upper end on the mounting rail 42 of the body-supporting structure 16. The control linkage also includes a rear guide link 82 spaced rearwardly of the front guide link 76 and disposed in an upwardly and slightly rearwardly inclined position. The rear guide link 82 has a pivotal mount 84 at its lower end on the rocker member 58 and a pivotal connection 86 at its upper end on the mounting rail 42.

The control linkage, including the front and rear guide links 76 and 82 and their respective pivotal mounts and pivotal connections, mounts the body-supporting structure 16 for rearward movement with a slight change of pitch relative to the rocker member 58. The links 76 and 82 are so arranged as to turn downwardly and rearwardly about their respective pivotal mounts 78 and 84 when the occupant sits comfortably in the chair, and for this purpose the chair construction is such that the center of gravity of the body-supporting structure 16 and the occupant is located rearwardly of the instantaneous center of rotation of the guide links 76 and 82 in the upright sitting position of FIG. 2. Releasable locking means are employed for maintaining the body-supporting structure 16 in the stable upright sitting position of FIG. 2 relative to the rocker member 14, which locking means will be presently described. When such locking means is released, the body-supporting structure 16 tends to drop into the position of FIG. 3, guided by the guide links 76 and 82.

With the body-supporting structure 16 locked in the stable position of FIG. 1 relative to the rocker member 14, its center of gravity establishes a stable position of the rocker member 14 on the base member 54 with the springs 70 and 72 substantially unstressed. From this position, the rigidly-locked body-supporting structure 16 and rocker member 14 may be rocked back and forth upon base 12 with the rocker surfaces 64 turning upon the rocker-supporting surface 56. The springs 70 and 72 are wound with some initial tension. When the body-supporting structure 16 is rocked rearwardly, the rear pair of springs 72 are contracted to relieve some initial tension and the front pair of springs 70 are expanded to increase their tension. When the body-supporting structure 16 is rocked forwardly, the front pair of springs 70 are contracted and the rear pair of springs 72 expanded.

The chair also includes a leg-rest 90 and a leg-rest control linkage 92 mounting the leg-rest on the forward portion of the seat for movement from a retracted position beneath the seat (shown in FIGS. 1 and 2) to an extended leg-supporting position forwardly of the seat, as shown in FIG. 3. In this illustrative embodiment, the leg-rest control linkage 92 is illustrated as including three pairs of interconnected links providing a lazy tong or scissor type of leg-rest mounting and control linkage. It is to be understood, however, that any other suitable type of leg-rest mounting and control linkage may be substituted therefor, such other linkages being well-known and amply disclosed in prior patents owned by the assignee of this application.

Specifically, the leg-rest control linkage 92 includes a first pair of links 94 and 96 having their adjacent ends connected by pivot 98, a second pair of links 100 and 102 having their adjacent ends connected by pivot 104, and a third pair of links 106 and 108 having their adjacent ends connected by pivot 110. The first link 94 of the first pair has a pivotal mount 112 on the forward portion of the mounting rail 42, while the first link 100 of the second pair has a pivotal mount 114 on the rail 42 at a point spaced forwardly of the pivotal mount 112. The second link 96 of the first pair crosses over the first link 100 of the second pair and has a pivotal connection 116 therewith. The forward end of the second link 96 of the first pair has a pivotal connection 118 to the first link 106 of the third link pair. The second link 102 of the second link pair crosses over the first link 106 of the third link pair and is connected thereto at its crossing over point by pivot 120. The ends of links 102 and 108 are connected to spaced points on the leg-rest 90 by respective pivots 122 and 124.

The leg-rest actuating and control arrangement is completed by a direct actuating link 126 which has a pivotal connection 128 at its forward end with the link 94 and a pivotal mount 130 on a bracket 132 affixed to the rocker member 14. In response to rearward movement of the body-supporting structure 16 relative to rocker member 14, the pivotal connections 112, 114 of the leg-rest mounting linkage will be displaced rearwardly and the actuating link 126 will oppose the rearward movement of the link 94 at pivot 128, causing the link 94 and its connected link 100 to swing forwardly and upwardly about the respective pivots 112 and 114 to thereby move the leg-rest 90 from its stored position illustrated in FIGS. 1 and 2 to an elevated leg-supporting position spaced forwardly of the seat 38, as shown in FIG. 3.

In the stored or retracted position of the leg-rest 90 shown in FIGS. 1 and 2, the leg-rest is located in a vertical position beneath the forward end of the seat 38, with its upper end portion adjacent the cross-bar 28. Locking means 136 are provided to hold the leg-rest 90 in this retracted position and therefore also hold the body-supporting structure 16 in the stable position of FIGS. 1 and 2 relative to the rocker member 14. Said locking means 136 is illustrated in FIG. 4 and includes a bracket 138 secured to the under surface of cross-bar 28, which bracket 138 has an integral turned-up lug 140 forming a fixed latch element. A second lug 142 forms a movable latch element, and is secured to a rod 144. The rod 144 extends slidably through the fixed lug 140 and its end has a ring or eyelet 146 to which one end of a coil spring 148 is connected. The other end of spring 148 is secured to an anchor pin 150 affixed to the cross bar 28 in such a manner that tension of spring 148 urges the movable lug 142 toward the fixed lug 140. An angle bracket 152 is secured to the under surface of leg-rest 90 and is so positioned that its leg 152*a* will be slid between the lugs 140 and 142 and retained by the friction lock formed by said lugs. The lugs 140 and 142 have respective flared terminal portions 140*a* and 142*a* at their outer ends which act to guide the bracket flange 152*a* between the lugs 140 and 142. FIG. 4 illustrates the position of the leg-rest 90 in which the bracket lug 152*a* is about to enter the lugs 140 and 142, just before the leg-rest arrives at its fully-retracted position.

The free end of rod 144 is bent over and extends through a hole 154 in one end of a lever 156 to provide a pivotal connection with said lever 156. At a point closely spaced from the hole 154, the lever 156 is mounted by pivot 158 on a bracket 160 affixed to the cross-bar 28. The remainder of lever 156 defines a long lever arm, the free end of which is connected by pivot 162 to the end of a link 164. The link 164 is mounted for longitudinal sliding movement on the linkage mounting rail 42, and for this purpose has a longitudinal slot 166 which slidably receives a pin 168 affixed to said rail 42. A rod 170 is secured to the end of link 164, and at its free end the rod 170 carries a push-button 172. The push-button 172 extends slidably through an opening 174 in the chair side frame 18, which opening 174 is bordered by a metal ring 176 secured to the outer surface of side frame 18. The ring 176 provides a sliding bushing for the push-button 172 and also serves to prevent unravelling of the fabric (not shown) with which side frame 18 is covered.

With the leg-rest 90 in its fully retracted position of FIG. 1, the bracket leg 152*a* is clamped tightly between the lugs 140 and 142 and is frictionally retained thereby through tension of spring 148. The locking of the leg-rest 90 in its retracted position also locks the body-supporting structure 16 in its stable position of FIG. 1 relative to the rocker member 14, and the body-supporting structure may be rocked upon the base 12 in the manner previously described.

When the occupant of the chair wishes to assume a more comfortable position with his legs supported in outstretched condition, suitable for viewing television, reading, or the like, he merely presses push-button 172 inwardly. This causes link 164 to slide inwardly on rail 42, turning lever 156 about pivot 158, and drawing rod 144 in the direction of the arrow in FIG. 4. This sliding movement of rod 144, against tension of spring 148 separates the movable lug 142 from the fixed lug 140 and releases the bracket leg 152*a* carried by the leg-rest 90 so that the latter is freed to move to its extended position. The body-supporting structure 16 under the biasing force of its center of gravity and that of the occupant will then move automatically to its second stable position of FIG. 3, guided by the guide links 76 and 82. When the push-button 172 is released, the tension of spring 148 will return it to its projecting position and also move the lug 142 back toward fixed lug 140 so that the lugs are again



positioned to receive and frictionally retain the bracket leg 152*a*. The slot 166 is sized to limit movement of the push-button 172 so that it does not project too far outwardly of the side frame 18 and cannot be pushed too far within the opening 174.

When the body-supporting structure 16 is moved rearwardly upon rocker member 14 by the guide links 76 and 82, its rearward movement is halted by engagement of the under surface of the rail 42 with a rear portion 178 of rocker member 14, as shown in FIG. 3. In this position, the body-supporting structure 16 is tilted rearwardly slightly relative to rocker member 14. Since the leg-rest 90 is extended, however, and is supporting the outstretched legs of the occupant, the center of gravity of the body-supporting structure 16 is shifted forwardly, causing the rocker member 14 to tilt forwardly on the base member 54, as can be seen by comparing FIG. 3 with FIG. 2. This forward tilting movement of rocker member 14 brings the body-supporting structure 16 to the balanced or stabilized position of FIG. 3 in which it is approximately at the same pitch relative to the base 12 or floor surface as it was in the sitting position of FIGS. 1 and 2. The occupant's body is therefore disposed in approximately the same sitting position, except that the leg-rest is extended.

With the chair in the stabilized position of FIG. 3 with leg-rest 90 extended, the occupant may again cause the body-supporting structure 16 to rock upon base member 12 in the manner previously described and to the extent permitted by the springs 70 and 72.

To return the chair from the position of FIG. 3 to the position of FIGS. 1 and 2, it is only necessary for the occupant to push downwardly with his legs upon the leg-rest 90, causing said leg-rest to move back to its retracted position, wherein the bracket leg 152*a* will again be grasped and retained by lugs 140 and 142.

It will be appreciated that since the seat, back-rest, and chair arms are made in one integral unit as the body-supporting structure 16, there is no rearward movement of the seat relative to the chair arms, as is customary in reclining chairs, and a T-cushion construction can be used in the seat. Since, however, with this arrangement the occupant cannot start the initial rearward movement of the seat and back-rest by grasping the chair arms and applying rearward pressure to the seat and back-rest in the normal manner of conventional reclining chairs, the body-supporting structure of the present invention is biased rearwardly so that it automatically begins its rearward movement. In the illustrated embodiment, this biasing force is provided by the arrangement of guide links 76 and 82. A releasable locking arrangement is thus provided to hold the body-supporting structure 16 in its normal sitting position against this rearward biasing force.

While a preferred embodiment of the invention has been shown and described herein, it is obvious that numerous additions, changes and omissions may be made in such embodiment without departing from the spirit and scope of the invention.

What I claim is:

1. A chair comprising a base, a rocker member engaging said base to rock thereon, a body-supporting structure including a rigidly-formed seat, back-rest and chair arms, guide means mounting the seat on the rocker member for movement of the body-supporting structure rearwardly relative to the rocker member from a forward position to a rearward position, a leg-rest, leg-rest control and actuating means mounting the leg-rest on the body-supporting structure and moving the leg-rest from a retracted position to a leg-supporting position in response to movement of the body-supporting structure relative to the rocker member from the forward position to the rearward position, said guide means and the center of gravity of the body-supporting structure in the forward position being so arranged as to cause the body-supporting structure to move rearwardly automatically to its

rearward position, and manually-releasable locking means rigidly coupling the body-supporting structure with the rocker member in the forward position, the rocker member carrying the body-supporting structure in its forward position with the leg-rest retracted having a first stable position of balanced equilibrium on said base and being adapted to be rocked on said base in said first stable position, the rocker member carrying the body-supporting structure in said rearward position with the leg-rest extended having a second stable position of balanced equilibrium on said base and being also adapted to be rocked on said base in the second stable position.

2. A chair comprising a base, a rocker member engaging said base to rock thereon, a body-supporting structure including a rigidly-formed seat, back-rest and chair arms, said seat having a T-cushion construction including a pair of laterally-projecting front extension portions overlying the forward edges of the chair arms, guide means mounting the seat on the rocker member for movement of the body-supporting structure rearwardly relative to the rocker member from a forward position to a rearward position, said guide means including front and rear guide links pivotally mounted at spaced points on said rocker member and pivotally connected to spaced points on the body-supporting structure, the front guide link extending vertically upward from its pivotal mount and the rear guide link extending upwardly and rearwardly from its pivotal mount in the forward position, and the center of gravity of the body-supporting structure being so arranged as to cause the latter to move rearwardly automatically to its rearward position, and manually-releasable locking means rigidly coupling the body-supporting structure with the rocker member in the forward position, a leg-rest, leg-rest control means mounting the leg-rest on the body-supporting structure for movement between a retracted position, beneath the seat and an extended position forwardly of the seat, and leg-rest actuating means for moving the leg-rest from its retracted position to its extended position in response to movement of the body-supporting structure relative to the rocker member to its rearward position, said rocker member carrying the body-supporting structure locked in its forward position having a first stable position of balanced equilibrium on said base and being rockable about said first stable position, said rocker member carrying the body-supporting unit in its rearward position having a second stable position of balanced equilibrium on said base and being rockable about said second stable position.

3. A chair according to claim 2 in which said locking means includes a pair of jaws mounted on said body-supporting structure, biasing means urging said jaws toward each other, a member carried by the leg-rest and receivable between said jaws when the leg-rest is in its retracted position whereby said member is clamped and retained between said jaws and said leg-rest is locked in retracted position, and manually-operable means connected to said jaws for spreading apart said jaws against the force of said biasing means to release said member.

4. A chair according to claim 3 in which said manually-operable means includes a push-button slidably mounted in said body-supporting structure and projecting exteriorly thereof, a lever operatively connected at one end to said push-button, a rod operatively connected to the other end of said lever and secured to one of said jaws for pushing said jaw away from the other jaw when said push-button is depressed.

5. A chair comprising a base, a rocker member engaging said base to rock thereon, a body-supporting structure including a rigidly-formed seat, back-rest and chair arms, guide means mounting the seat on the rocker member for movement of the body-supporting structure rearwardly relative to the rocker member from a forward sitting position to a rearward tilted position, a leg-rest, leg-rest control means mounting the leg-rest on the body-supporting structure for movement between a retracted position beneath the seat and an extended leg-supporting position forwardly of the seat, leg-rest actuating means for moving the leg-rest from its retracted position to its extended position in response to movement of the body-supporting structure on said rocker member from its forward position to its rearward position, the center of gravity of the body-supporting structure being so arranged as to cause the latter to move rearwardly automatically on said rocker member guided by said guide means from its forward sitting position to its rearward tilted position, and manually-releasable locking means rigidly coupling the body-supporting structure with the rocker member in said forward sitting position, said locking means including a pair of jaws, spring means urging the jaws toward each other, a member carried by the leg-rest and positioned between the jaws in the retracted position of the leg-rest with the spring biased jaws grapsing and frictionally holding said member to lock the leg-rest in retracted position, and manually-operable means for spreading apart said jaws to release said member, said rocker member having a first stable position of balanced equilibrium on said base when the body-supporting structure carried thereby is in its forward position with the leg-rest retracted and being freely rockable on said base in said first stable position, said rocker member also having a second stable position of balanced equilibrium relative to said base when the body-supporting structure carried thereby is in its rearward position with the leg-rest extended, and being freely rockable on said base in said second stable position.

6. A chair according to claim 5 in which said leg-rest actuating means includes an actuating link pivotally mounted on said rocker member and pivotally connected to said leg-rest control means.

7. A chair according to claim 5 in which the center of gravity of the body-supporting structure is located rearwardly of the instantaneous center of rotation of the body-supporting structure on the rocker member.

8. A chair according to claim 5 in which said manually-operable means includes a rod slidably mounted on the body-supporting structure and carrying one of said jaws, said spring means urging said rod in a direction to move said one jaw carried thereby toward the other jaw, a lever mounted on the body-supporting structure and pivotally connected at one end to said rod, a slide member slidably mounted on the body-supporting structure and pivotally connected to the other end of said lever, and a push button carried by said slide member and projecting exteriorly of said body-supporting structure.

9. A chair comprising a base, a rocker member having a continuous smooth curved surface engaging a flat surface on said base to rock freely thereon, a body-supporting structure including a rigidly formed seat, back-rest and chair arms, and guide means mounting the seat on the rocker member for rearward movement of the body-supporting structure relative to the rocker member from a forward position to a rearward position thereon, a leg-rest control and actuating means mounting the leg-rest on the body-supporting structure and operatively coupled to said guide means to move the leg-rest from a retracted position to a leg-supporting position in response to the rearward movement of said body-supporting structure relative to the rocker member, said rocker member having a first stable position of balanced equilibrium on said base member when said body-supporting structure is in said forward position and said leg-rest is retracted, said rocker member in said first stable position being freely rockable forwardly and rearwardly on said base, said rocker member being movable to a second stable position of balanced equilibrium on said base member when said body-supporting structure is moved to said rearward position and said leg-rest is elevated, said rocker member in said second stable position being freely rockable forwardly and rearwardly on said base, manually releasable locking means normally holding the rocker

member and said body-supporting structure in a rigid relationship when said rocker member is in said first stable position, said guide means being biased to automatically operate when said locking means is released to move said body-supporting structure to its rearward position relative to said rocker member, said guide means and rocker member cooperating to tilt said body-supporting structure relative to said base in the rearward position of said body-supporting structure.

**References Cited** in the file of this patent

UNITED STATES PATENTS

Re. 11,906 Harmon ---------- April 16, 1901
344,255 Doubler ---------- June 22, 1886
529,273 Kaltwasser ---------- Nov. 13, 1894
733,327 Moore ---------- July 7, 1903
2,746,519 Krikorian ---------- May 22, 1956
2,804,124 Belisle ---------- Aug. 27, 1957
2,817,388 Knabusch et al. ---------- Dec. 24, 1957
2,907,373 Katz ---------- Oct. 6, 1959
2,940,509 Fletcher ---------- June 14, 1960
2,940,510 Schliephacke ---------- June 14, 1960
2,951,528 Maurer ---------- Sept. 6, 1960
3,065,989 Mohler ---------- Nov. 27,1962