March 3, 1970 K. WITTER 3,498,917

LIQUID DEVELOPER FOR ELECTROSTATIC IMAGES

Filed Oct. 21, 1966

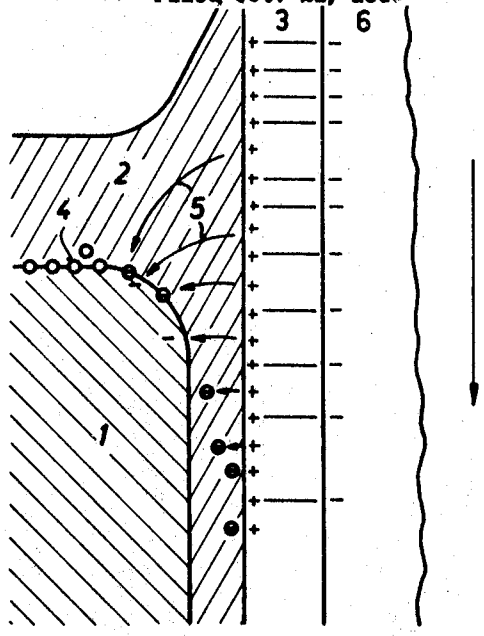

Fig.1

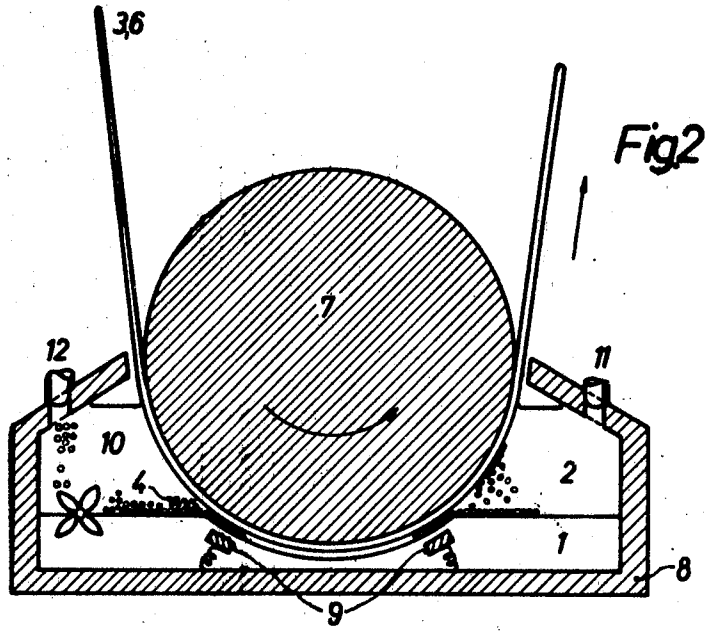

Fig.2

INVENTOR.
KLAUS WITTER

BY
Frank R. Trifari
AGENT

United States Patent Office

3,498,917

Patented Mar. 3, 1970

1

3,498,917
LIQUID DEVELOPER FOR ELECTROSTATIC IMAGES

Klaus Witter, Hamburg-Lokstadt, Germany, assignor, by mesne assignments, to U.S. Philips Corporation, New York, N.Y., a corporation of Delaware

Filed Oct. 21, 1966, Ser. No. 588,576
Claims priority, application Germany, Oct. 23, 1965, P 37,944
Int. Cl. G03g *9/04;* C09c *3/02*
U.S. Cl. 252—62.1 3 Claims

ABSTRACT OF THE DISCLOSURE

A liquid developer for developing latent, electrostatic images on solid carriers containing a mixture of mercury and an organic electrically insulating liquid, immiscible with the mercury, for example turpentine and a solid toner for example metal sulfide dispersed in the insulating liquid.

The invention relates to a method of developing latent, electrostatic images on carriers with the use of liquids. Solid developers usually consist of two powdery constituents of the same or of different granular size, which charge each other tribo-electrically. If this mixture is poured onto the charge-image to be developed the grains of a polarity opposite that of the image are retained, so that a visible picture is formed. With liquid developers the suspended toner assumes an electrostatic charge with respect to the liquid. This developing process corresponds to the phenomenon known under the name of electrophoresis.

Especially in electrographic printing methods the charge image can be produced very rapidly, so that there is a need for developing methods operating at the same rate. In the case of solid developers an adequate quality of the picture requires a very accurate maintenance of the mixing ratio of the constituents. Large-scale developments therefore require very large quantities of developer, to be worked up rapidly, since otherwise the content of picture-forming toners of the mixture would drop very soon. With liquid developers an accelerated electrophoresis can be ensured only by a higher charge of the toner particles. If at all this effort is successful, an adequate toning requires a higher surface-charge density at the image parts, which is not achieved by the charging process without the need for further means. Liquid developers may be easily deteriorated by small impurities. Moreover, considerable difficulties arise with many liquid and solid developers in obtaining uniform toning of larger surfaces. The novel method of the invention obviates these disadvantages and is characterized in that two liquids are employed, which do not intermix one of which being polar and at least to some extent electrically conductive, whereas the other is highly insulating (dielectric) and forms a thin film between the layer to be developed and the polar liquid, whilst the toner material suspended in this liquid or initially contained only in the contact region of the two liquids penetrates through the thin film to the layer in accordance with the latent charge-images.

Owing to the geometric position of the two liquids with respect to the surface of the image carrier, given by the different wetting properties, the electrophoresis of charged particles in the dielectric liquid is considerably accelerated. The speed of migration of the suspended, charged particles is, as is known proportional to the electric field. Owing to the presence of the polar liquid in the thin film of the dielectric liquid a considerably stronger electric field is produced. When the toner material is initially present only in the boundary region, this is particularly advantageous, since during the developing process the toner

2

receives its charge from the conducting liquid, so that it is not necessary for the toner material to assume independently an electric charge in the dielectric liquid with respect to the latter; such a requirement can usually be fulfilled only by complicated, sensitive suspensions.

The novel method provides short periods of development at a low surface charge density of the electric images, a cheap space-saving construction of the developing apparatus and the possibility of using cheap, chemically simple substances.

This principal will be explained with reference to FIG. 1. Two liquids, which do not intermix, are used. The liquid **1** is polar—for example, water, glycol, glycerine, methanol and so on—or formed by metallic, conducting mercury, whereas the liquid **2** is highly insulating (dielectric)—for example, petrol, benzene, cyclohexane, turpentine, silicon oil, carbon tetrachloride, Freons. An immersed carrier of the charge-image, which consists in all electrostatic printing or copying methods of a layer **3** and a substrate **6** (paper) is wetted more strongly by the dielectric liquid **2** with an appropriate choice of the liquids. The liquid **2** forms a thin film between the layer **3** and the polar liquid **1** and from an electrostatic point of view it forms the dielectric of a capacitor of a high capacity. When charged regions are immersed, a strong electric field **5** with respect to the polar liquid **1** is produced. When a toner **4**, which must be electrically good conducting, for example, soot, is introduced into the interface of the liquids **1** and **2**, it is charged at the polar liquid **1** with a polarity opposite the charged image and penetrates through the liquid **2** towards the layer regions to be coloured. The process is aided by the fact that apart from the layer **3** also the toner **4** is usually wetted more strongly by the liquid **2** than by the liquid **1** and that the energy of the process is such that conditions are favorable for the toner to be located at the interface. The process consists in continuously moving the image carriers **3**, **6** through an insulating liquid **2** through an interface rich in toner material in a polar, more conductive liquid **1** by means of a rotatable device **7**, which is located at least partly in the liquid **1**, out of the liquid phase system. Various embodiments are possible (FIG. 2).

A large quantity of toner material is introduced into the system, so that it floats in a thick layer on the liquid **1**, in which it settles by sedimentation, whereas for reasons of energy it is not capable of transgressing the phase boundary. When a charge-image is dipped into the liquid **1**, said process of the toner transition takes place. In addition, a great quantity of toner material is carried along by the uncharged regions. During the withdrawal from the liquid **1**, this material drops down and settles in the liquid **2** down to the phase boundary. The current produced in the liquids by the movement of the image carrier provide a uniform toner distribution in the phase boundary. It is advisable to use fairly coarse, inorganic toners, whilst an adequate conductivity has to be ensured. Such a toner has little or no emulsifying effect in the two liquids, if the interfacial tension is chosen not to be too low. Coarse toner grains and a low viscosity of the insulating liquid are conducive to the sedimentation of the toner material (and simultaneously to the toner transition).

The cleanness of the picture is determined essentially by the toner concentration of the upper layers of the liquid **2**, so that in upward direction a concentration gradient should be maintained.

EXAMPLE

Liquid 1	Liquid 2	Toner
Water	Toluene Pentane	Iron oxide—black soot, granular size about 20 μ.

An ideal concentration gradient is obtained, when the toner is exclusively in the phase boundary. However, a single boundary region would soon lose toner material. A plurality of boundary regions for the process is obtained by using an emulsifying toner. In this case the degree of distribution of the liquid **1** in the liquid **2** should not be high, in order to ensure that an electric compensation of charges remains possible. With an appropriate choice of the boundary stress large drops covered with toner material (diameter about 0.5 cm.) are stable in the liquid **2**. In this case steps for keeping the image clean may be dispensed with, but with high rates of development an agitator has to be provided for mixing the toner with the boundary region.

EXAMPLE

Liquid 1	Liquid 2	Toner
Water	Decaline	Active carbon.
Methanol	Decane	Graphite.

Interesting possibilities are given by mercury as the liquid **1**. There is no objection whatsoever against using it beneath a dielectric liquid **2** from the physiological aspect. Owing to its high surface stress, the wetting properties referred to above are always available. All toners and image carriers that cannot be amalgamated may be employed. The toners may have a higher specific weight—for example, various metal powders, metal oxide powders, metal sulphide powders and so on, so that the rate of sedimentation of the toner in the liquid **2** is higher. The image carriers may be light-sensitive metal drums (metal plates) electrographic or electrophotographic special paper. Moreover the liquid **2** may then have a higher specific weight, so that the non-inflammable, halogenized hydrocarbons, or, if desired, highly volatile, non-inflammable, non-poisonous Freons.

For high rates of development the following structural measures may be taken (FIG. 2). There is provided a rotary device formed by a metal roller **7**, immersed in the developer bath at the most by half, so that the rear side of the image carrier material **3**, **6** is not wetted. The consumption of the liquid **2** is thus reduced. The tank **8** is shaped in a form such that only a minimum quantity of liquid can evaporize. The consumption of liquid is, of course, determined chiefly by the adsorption at the image carrier; in the case of very high rates of passage through the liquid **2** it is advisable to provide a device for regaining said liquid (not shown in FIG. 2). The electrode **9** in the neighbourhood of the transitional regions of the toner material serve to prevent the static charge of the liquid **1**. It is advantageous to connect them in the rotary device **7**, if desired, via the tank **8**. There is furthermore provided an agitator **10**. Through the opening **11** the liquid **2** is replenished. The liquid level can be controlled by a float provided inside the tank (not shown in FIG. 2). Through the opening **12** the toner material is replenished; the quantity can be controlled by a photoelectric device arranged inside the tank, the light absorption of the toner **4** being utilized (not shown either).

Even with light-sensitive image carriers the course of the rays or the wavelength of the light of this device may be chosen in an appropriate manner. Instead of using a rotary device **7** and a tape-shaped image carrier, a drum, which may be light-sensitive, may be employed as an intermediate carrier, from which the developed image is afterwards transferred to the definite picture carrier. In FIG. 2 the drum has to be supposed to take the place of the rotary device **7**.

The high rates of development involved in this method provide a few further advantages.

Owing to the short period of staying-time of the (non-developed) charged image in the liquid **2**, the requirements with respect to insulation capacity need not be severe. The developing process is performed more rapidly than the discharge of the image by contamination with ions. The liquid **2** need not be chemically pure, so that the cost may be lower.

If the image carrier consists of a synthetic resin, the developing process is performed more rapidly than the dissolving process in the liquid **2**. The solubility may be chosen appropriately by mixing an inert liquid and a dissolving liquid. The developing bath is then at the same time a fixing bath.

What is claimed is:

1. A liquid developer for electrotatic images consisting essentially of a mixture of liquid mercury, an organic dielectric liquid inert to and immiscible with mercury and finely divided toner material inert to mercury, dispersed in said mixture and consisting of finely divided carbon or finely divided inorganic toners.

2. The liquid developer of claim **1** wherein the toner is selected from the group consisting of finely divided metals, metal oxides and metal sulfides inert to mercury.

3. The liquid developer of claim **2** wherein the organic liquid is selected from the group consisting of benzene, cyclohexane, turpentine, silicon oil, carbon tetrachloride and gasoline.

References Cited

UNITED STATES PATENTS

3,001,888	9/1961	Metcalfe et al.	117—37
3,068,115	12/1962	Gundlach	117—37
3,084,043	4/1963	Gundlach	96—1
3,212,916	10/1965	Metcalfe et al.	117—37
3,247,007	4/1966	Oliphant	117—37
3,259,581	7/1966	Matkan	117—37 X
3,300,410	1/1967	Oliphant	252—62.1
3,301,698	1/1967	Fauser et al.	117—37
3,311,490	3/1967	Fauser et al.	117—37
3,337,340	8/1967	Matkan	117—37 X
3,369,524	2/1968	Fuhrer	117—37 X

WILLIAM D. MARTIN, Primary Examiner

EDWARD J. CABIC, Assistant Examiner

U.S. Cl. X.R.

117—37; 118—637