Sept. 9, 1952 R. M. PARRY 2,609,586

METHOD AND APPARATUS FOR STRESSING CONCRETE

Filed Dec. 13, 1949 3 Sheets-Sheet 1

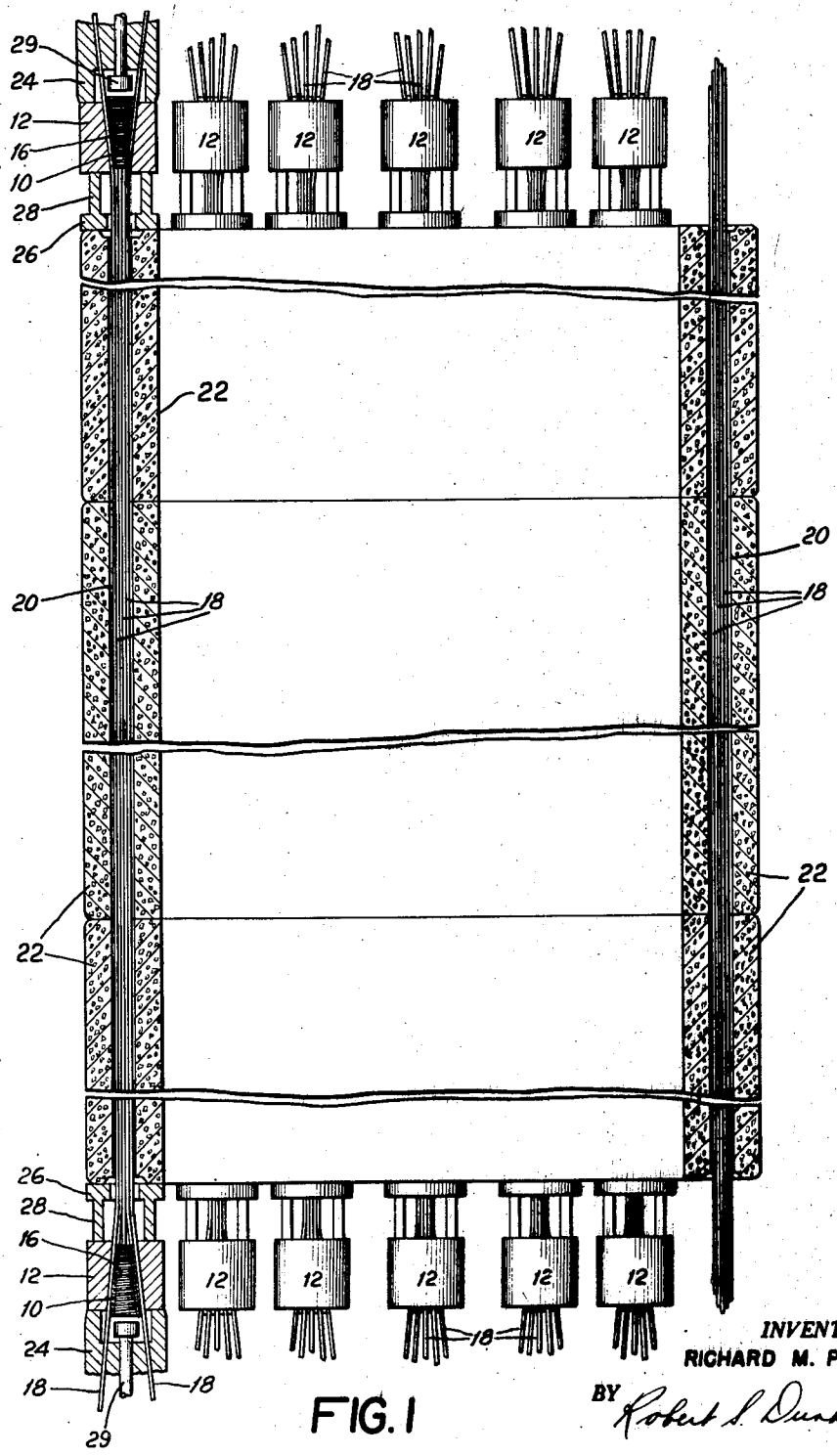

FIG. 1

INVENTOR.
RICHARD M. PARRY
BY Robert S. Dunham
ATTORNEY.

Sept. 9, 1952 R. M. PARRY 2,609,586

METHOD AND APPARATUS FOR STRESSING CONCRETE

Filed Dec. 13, 1949 3 Sheets-Sheet 2

FIG. 2

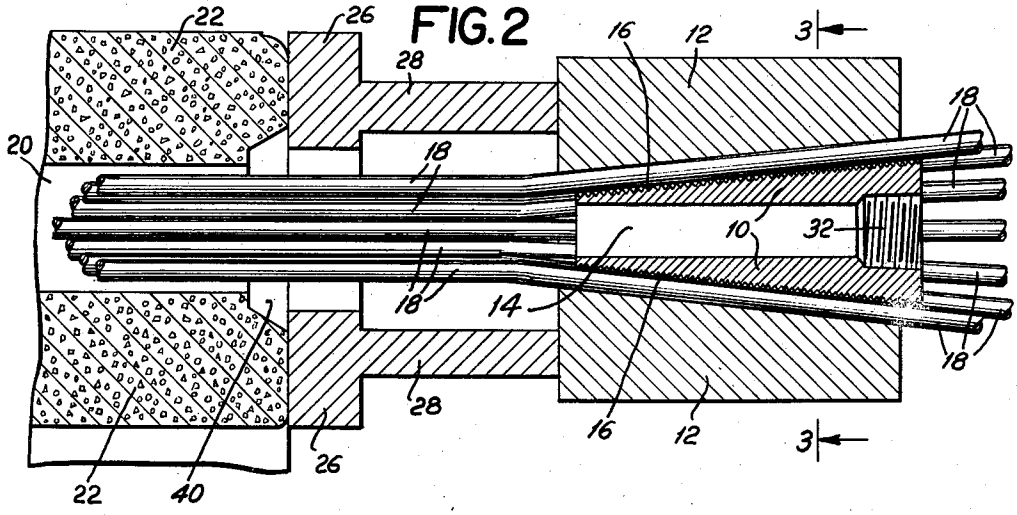

FIG. 4

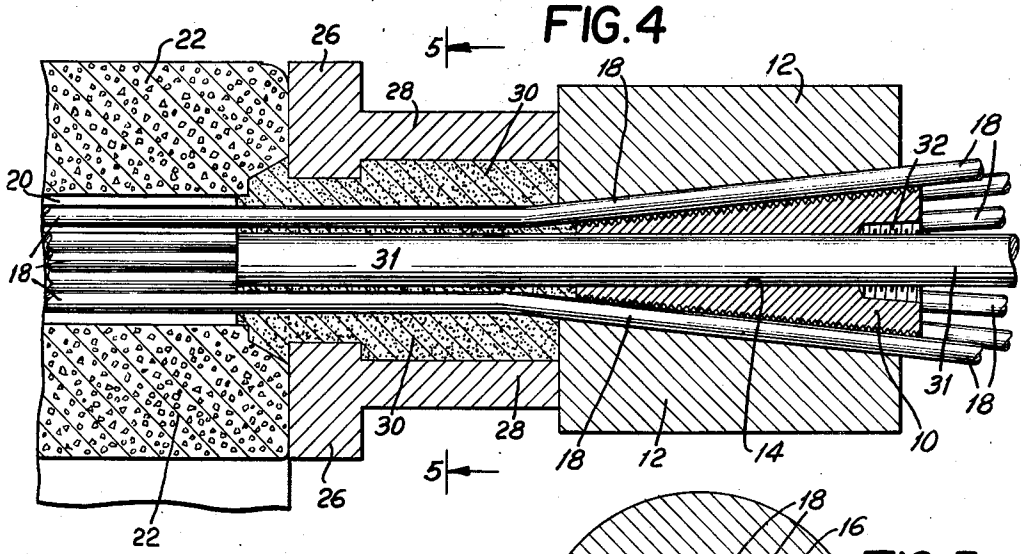

FIG. 3

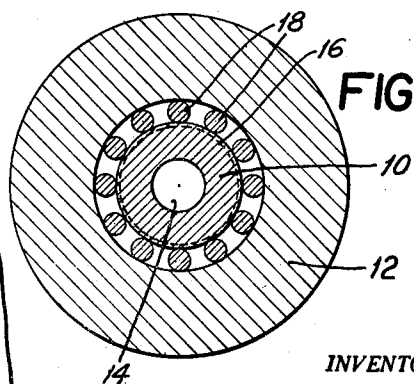

FIG. 5

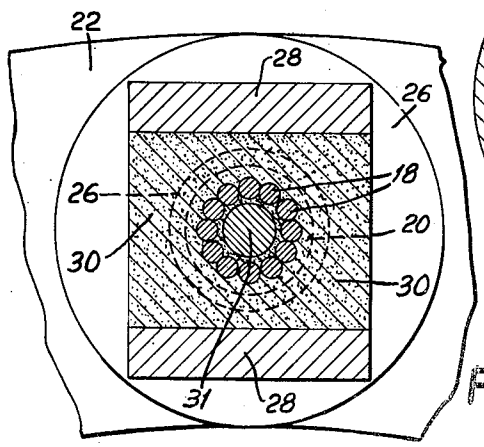

INVENTOR.
RICHARD M. PARRY
BY Robert S. Dunham
ATTORNEY.

Sept. 9, 1952 R. M. PARRY 2,609,586

METHOD AND APPARATUS FOR STRESSING CONCRETE

Filed Dec. 13, 1949 3 Sheets-Sheet 3

FIG.6

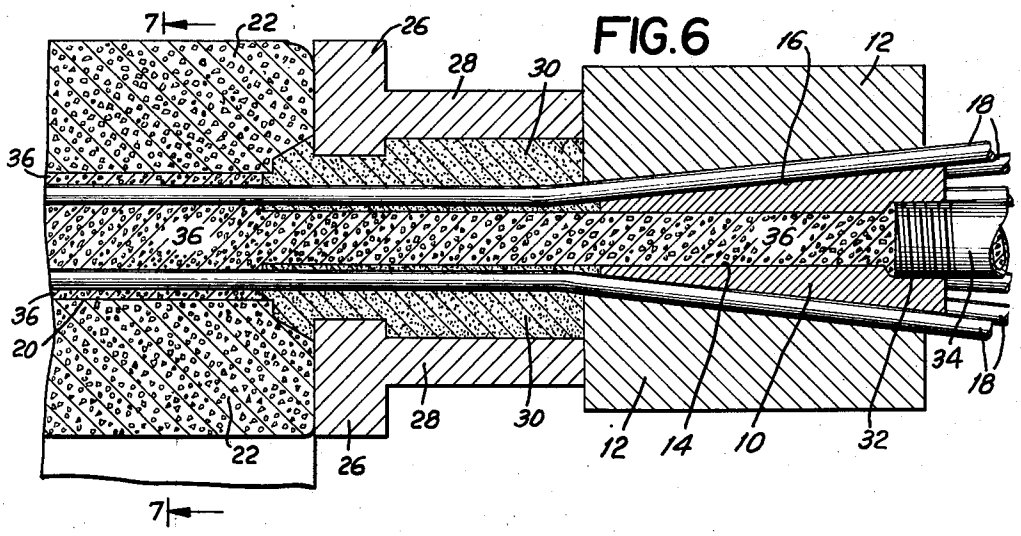

FIG.7

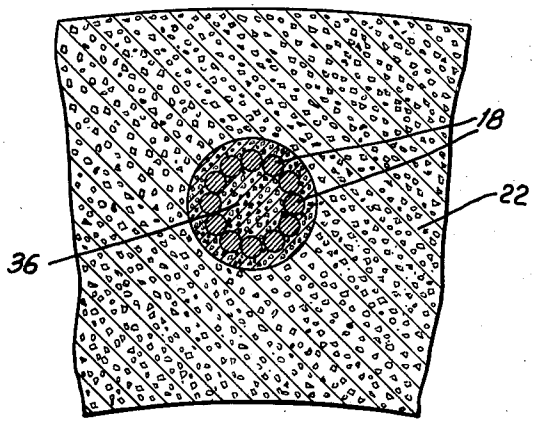

FIG.8

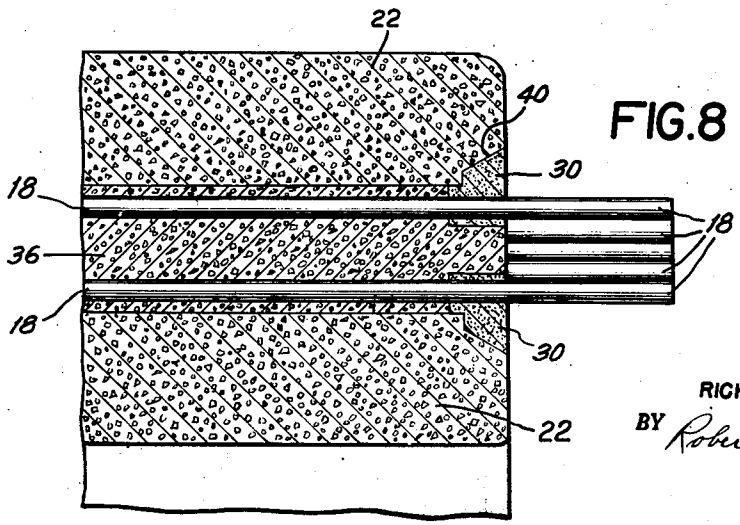

INVENTOR.
RICHARD M. PARRY
BY Robert S. Dunham
ATTORNEY.

Patented Sept. 9, 1952

2,609,586

UNITED STATES PATENT OFFICE

2,609,586

METHOD AND APPARATUS FOR STRESSING CONCRETE

Richard M. Parry, Teaneck, N. J., assignor to Raymond Concrete Pile Company, New York, N. Y., a corporation of New Jersey

Application December 13, 1949, Serial No. 132,654

7 Claims. (Cl. 25—154)

1

This invention pertains to methods, and apparatus, including equipment and devices for stressing concrete members. The invention as illustrated and described is applied to the stressing of a concrete structure comprising several axially aligned concrete tubular sections, the structure being adapted to be used, for example, as a tubular concrete pile or as a conduit for other purposes, but it will be understood that the invention is also applicable to the stressing of other forms of concrete members such as beams and the like.

By the use of the invention as here described, the concrete structure is subject to what is generally referred to as "prestressing," but more specifically or precisely with the preferred form of the invention the structure is "post-stressed," that is, after the concrete of the structure has set, wires or cables running through holes therein are highly tensioned by forces reacting against ends of the structure, the wires then preferably being bonded in place in the holes so that after the tensioning means is removed, a substantial amount of the tension will remain in the wires and serve to retain the concrete as bonded thereto, under compression. Thus the structure will have increased strength when loads are applied thereto tending to subject the concrete or parts thereof to tension.

With the form of concrete structure herein shown, the sections thereof have spaced apart aligned holes in their walls and the structure is bound together by wire cables, one cable in each hole and each cable comprising a group of high-strength highly stressed wires.

According to the method of the invention, the wires of each cable are first tensioned by one or more pull jacks at one or both ends of the structure. After the wires are tensioned, they are gripped by locking devices preferably comprising cones held by spacer means in spaced relation to the ends of the structure. A passage is provided through the locking means communicating with the hole in the concrete, the walls in such passage being temporarily sealed with respect to walls of the hole. Then, while the wires are still held under tension, cement grout is introduced under pressure through said passage and into the hole in the concrete about the wires, for bonding same to the walls of the hole. After such grout has set and bonded the wires in place, the protruding ends thereof may be cut off at said spacer means and the locking devices or cones may be removed. The tension in the wires is then maintained by the adhesive bond between the individual wires of

2

the cable and the walls of the holes in the concrete structure.

The invention has a number of advantages. For example, since the locking devices may be readily removed after use, same may be reused, thereby saving considerable expense; and since the wires may be held under tension entirely by reason of the grout bonding of same along the walls of the holes in the concrete, the protruding wire ends may be cut off, thereby eliminating obstructions at the surface of the concrete and also the concrete structure may be cut off at any point without in any way affecting the prestressing of the concrete at other points, and if at any point the structure or wires therein are subjected to injury or embody an imperfection, that fact will not interfere with the maintenance of the desired prestressing of the concrete at other points.

Further and other objects and advantages will be apparent from the specification and claims, and from the accompanying drawings which illustrate what is now considered to be a preferred embodiment of the invention.

In the drawings:

Fig. 1 shows, in cross-section, a sectional tubular concrete structure in process of being stressed, with locking cones and jacks illustrated at both ends of the cables which run through aligned holes in the sections, but if desired, one end of each cable may be anchored and a single jack used at the unanchored end;

Fig. 2 is an enlarged cross-section of one of the locking cone assemblies and showing the end portions of some of a group of wires forming a cable;

Fig. 3 is a sectional view on line 3—3 of Fig. 2;

Fig. 4 is a view similar to Fig. 2, at a later stage in the operation, with the temporary plaster of Paris seal in place, ready for the injection of cement grout;

Fig. 5 is a view on line 5—5 of Fig. 4, showing the temporary plaster of Paris seal;

Fig. 6 is a view similar to that of Fig. 4 but showing the parts after the cement grout has been injected.

Fig. 7 is a sectional view on line 7—7 of Fig. 6; and

Fig. 8 is a sectional view of a portion of the finished stressed concrete structure.

Considering first the locking devices which grip the wires after they are tensioned, each device (Fig. 2) is made up of an extremely hard internal cone 10 having sharp wire-engaging corrugations on its surface, and a very smooth external match-

ing-cone 12, both cones being of hardened steel. Internal cone 10 is truncated and has a central hole 14 for the passage of cement grout.

The wires forming each tensioning cable are first threaded through holes 20 in the concrete wall 22, with the ends of each group of wires projecting preferably from both ends of the holes as indicated at the right in Fig. 1.

The external cone 12 is then placed around the outside of the projecting ends of each group of wires, and the corrugated internal cone 10 is inserted inside the projecting wires (Figs. 1, 2). All wires 18 in each group are then gripped and tensioned simultaneously and evenly by pull jacks 24 reacting against the end of the concrete structure through the external cones 12 and special spacing stools, each of which comprises an annular seat 26 in contact with the concrete, and legs 28 abutting against cone 12.

The inner cones 10 are then wedged into locking engagement with the tensioned wire groups by plungers 29 of the jacks. The pressures on the wire-tensioning cylinders of the jacks are then released and the jacks removed.

Upon release of the tensioning, all wires 18 of the cable contract slightly longitudinally, drawing the inner cones 10 into the outer cones 12, thereby securely locking the tensioned wires between the cones.

After the tensioned cables are thus locked, the spaces between legs 28 of the spacing stool and around wires 18 are filled with a temporary removable sealing material such for example as plaster of Paris 30 or the like readily frangible material (Figs. 4 and 5). An extension of passage 14 (Fig. 2) through the plaster is provided by a temporary rod 31 (Fig. 4) extending through and beyond passage 14 before the plaster was poured, and removed after the plaster is set.

Then, through a pipe 34 (Fig. 6), screwed into cone 10 at 32 (Fig. 2), cement grout 36 (Fig. 6) is forced under pressure through passage 14 (Fig. 2), into hole 20 until hole 20 is full of cement, with wires 18 embedded in the grout.

When the grout has cured sufficiently, the plaster of Paris seal 30 is chipped away and the projecting wires 18 are cut (Fig. 8) so that cones 10, 12 and the spacing stool 26—28 may be removed for re-use. The projecting wires may be cut off short, or they may be bent over and fastened within the depression 40 (Figs. 2, 8).

It is to be understood that the invention is not limited to the specific embodiment herein illustrated and described, but may be carried out in other ways without departure from its spirit as defined by the following claims.

What is claimed is:

1. In apparatus for the stressing of concrete members by the use of wires and the like extending through cavities in the concrete and initially protruding therefrom, the combination comprising clamping means including a clamping member having a conical opening adapted to receive protruding portions of the wires and a conical clamping member adapted to be received in said opening and to clamp the wires with respect to the walls of said opening, a stool member adapted to be positioned between said clamping means and the surface of the concrete, such stool member containing space permitting the wires to extend from the cavity in the concrete into said clamping means, and a mass of readily removable temporary filler means forming a body of solid material in said space within said stool and surrounding the wire portions therein, but containing a passage for forming a continuation of the cavity in the concrete, said second named clamping member also having a central opening therethrough communicating with said passage, said temporary filler means serving effectively to seal the surface of the concrete surrounding the cavity therein with respect to portions of the clamping means surrounding the wires while leaving such passage to permit injection of grout under pressure through the clamping means and filler means into the space surrounding the wires in the cavity in the concrete, and whereby upon removal of said temporary filler means, the wires will be exposed in the stool to permit cutting thereof for release of the clamping means.

2. In the prestressing of concrete members by the use of wires extending through a cavity in the concrete and initially protruding therefrom, the combination of method steps which comprises: arranging the protruding wire ends about a central space substantially coaxial with such cavity; tensioning the wires by applying to such ends tensioning force reacting against the concrete; clamping the wires at points between the concrete and the region of application of said force, to temporarily retain such tension; removing said tensioning force from the wires while they remain clamped under tension; and also, between such points and the concrete, surrounding the wires with sealing means which is readily removable and which surrounds said space to form same into a channel communicating with said cavity in the concrete and with sealed channel walls extending from the concrete outwardly beyond said clamping points; then introducing under pressure through said channel into said cavity a filling of cement grout for bonding the wires in place in the cavity; and, after such grout has set, removing such sealing means to expose the wires between the concrete and said clamping points and severing the wires as thus exposed, thereby releasing the wire tension from said clamping points, the grout thereafter retaining the wires under tension in the cavity and the tension of the wires as bonded in the cavity holding the concrete under compression.

3. In the prestressing of concrete members by the use of wires extending through a cavity in the concrete and initially protruding therefrom, the combination of method steps which comprises: arranging the protruding wire ends about a central space substantially coaxial with such cavity; tensioning the wires by applying to such ends tensioning force reacting against the concrete; clamping the wires in position after such tensioning at points spaced from the concrete temporarily to retain such tension and also, between such points and the concrete, surrounding the wires with readily removable sealing means whereby said space between the wires provides a channel communicating with said cavity in the concrete and with sealed channel walls extending from the concrete outwardly beyond said clamping points; then introducing under pressure through said channel into said cavity a filling of cement grout for bonding the wires in place in the cavity; and, after such grout has set, removing such sealing means to expose the wires between the concrete and said clamping points and severing the wires as thus exposed, thereby releasing the wire tension from said clamping points, the grout thereafter retaining the wires under tension in the cavity and

the tension of the wires as bonded in the cavity holding the concrete under compression.

4. In the stressing of concrete members by the use of wires and the like extending through cavities in the concrete and initially protruding therefrom, the combination of method steps which comprises: tensioning the wire by applying tensioning force to the protruding wire portions, such force reacting against the concrete to place same under compression; clamping said wire portions at a position spaced from the concrete temporarily to prevent release of such tension; providing a spacer between the concrete and the clamping means to hold the latter against being drawn toward the concrete by the wire tension; inserting a tube through the clamping means and through such spacer into communication with the cavity in the concrete; surrounding such tube within the spacer with a temporary filler to form a body of solid material about the wire portions and between the clamping means and the concrete; then removing such tube and introducing under pressure through the passage left thereby into such cavity in the concrete, a filling of cement grout for bonding the lengths of wire to the cavity walls in the concrete; thereafter removing sufficient of such filler to expose the wire portions at the region of the spacer; and also, after the grout has set, severing such exposed wire portions, thereby releasing the wire tension from the clamping means, the tension of the wire as bonded in the cavity then continuing to hold the concrete under compression.

5. In the stressing of concrete members by the use of wires and the like extending through cavities in the concrete and initially protruding therefrom, the combination of method steps which comprises: tensioning the wire in each cavity by applying tensioning force to the protruding wire portions, such force reacting against the concrete to place same under compression; clamping said wire portions at a position spaced from the concrete temporarily to prevent release of such tension; providing spacer means between the concrete and the clamping means to hold the latter against being drawn toward the concrete by the wire tension; forming with a temporary filler a body of solid material about the wire portions within such spacer means and accessible at the exterior of the spacer but leaving a passage forming a continuation of the cavity in the concrete; then introducing under pressure through said passage into such cavity a filling of cement grout for bonding the lengths of wire in the cavity to the cavity walls; thereafter removing sufficient of such filler means to expose the wire portions at the region of the spacer means; and also, after the grout has set, severing such exposed wire portions, thereby releasing the wire tension from the clamping means, the tension of the wire as bonded in the cavity then continuing to hold the concrete under compression.

6. In the stressing of concrete members by the use of a plurality of wires extending through a cavity in the concrete and initially protruding therefrom, the combination of method steps which comprises: arranging the protruding wire ends about an internal clamping element which has an axial passage therethrough and is spaced from the concrete; providing an external clamping element surrounding such arrangement of wire ends; tensioning the wires in the cavity by applying to their protruding ends tensioning force reacting against the concrete; then causing said clamping means to engage the wires and removing said force; providing temporary sealing means surrounding the wires at the concrete surface while leaving an opening inside the wire arrangement for bringing said passage into communication with the cavity; then, while retaining the wires under tension by said clamping elements, introducing under pressure through said passage and into the cavity a filling of cement grout for bonding the wires in the cavity to the cavity walls; and, after the grout has set, removing said sealing means to expose the wires and severing the wires to release the tension from the clamping elements.

7. In apparatus for the stressing of concrete members by the use of wires and the like extending through cavities in the concrete and initially protruding therefrom, the combination comprising: wire clamping means; stool means positioned between said clamping means and the surface of the concrete, such stool means containing space permitting the wire to extend from the cavity in the concrete into said clamping means; and a mass of readily removable temporary filler means forming a body of solid material in said space within said stool and surrounding the wire therein, but containing a passage forming a continuation of the cavity in the concrete, said clamping means also having a central opening therethrough communicating with said passage, said temporary filler means serving effectively to seal the surface of the concrete surrounding the cavity therein with respect to the clamping means while leaving such passage to permit injection of grout under pressure through the clamping means and filler means into the cavity in the concrete, and whereby upon removal of said temporary filler means, the wire will be exposed in the stool to permit severing thereof for release of the wire tension from the clamping means.

RICHARD M. PARRY.

REFERENCES CITED

The following references are of record in the file of this patent:

UNITED STATES PATENTS

Number	Name	Date
1,214,709	Orr	Feb. 6, 1917
1,272,281	McCord	July 9, 1918
2,270,240	Freyssinet	Jan. 20, 1942
2,371,882	Freyssinet	Mar. 20, 1945
2,413,990	Muntz	Jan. 7, 1947

FOREIGN PATENTS

Number	Country	Date
541,160	Great Britain	Nov. 14, 1941
541,437	Great Britain	Nov. 26, 1941