R. MONRO AND E. KLAUBER.

GAS MASK.

APPLICATION FILED APR. 30, 1919.

1,395,761. Patented Nov. 1, 1921.

Fig. 3

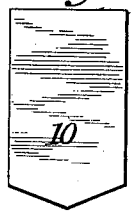

Fig. 1

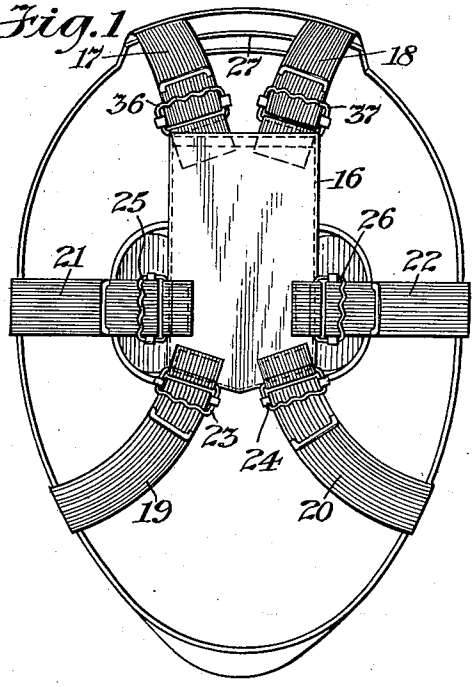

Fig. 4

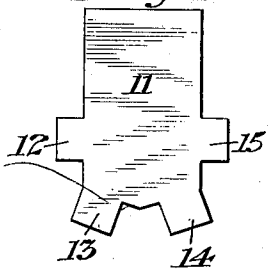

Fig. 5

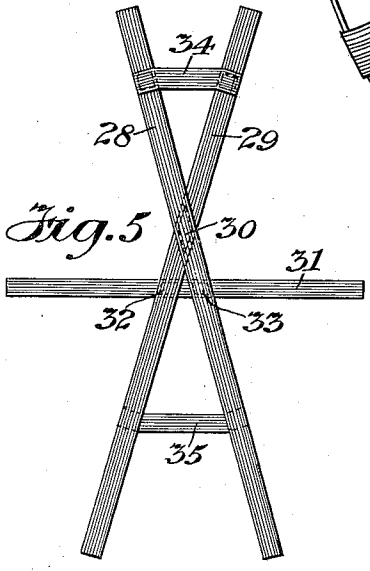

Fig. 2

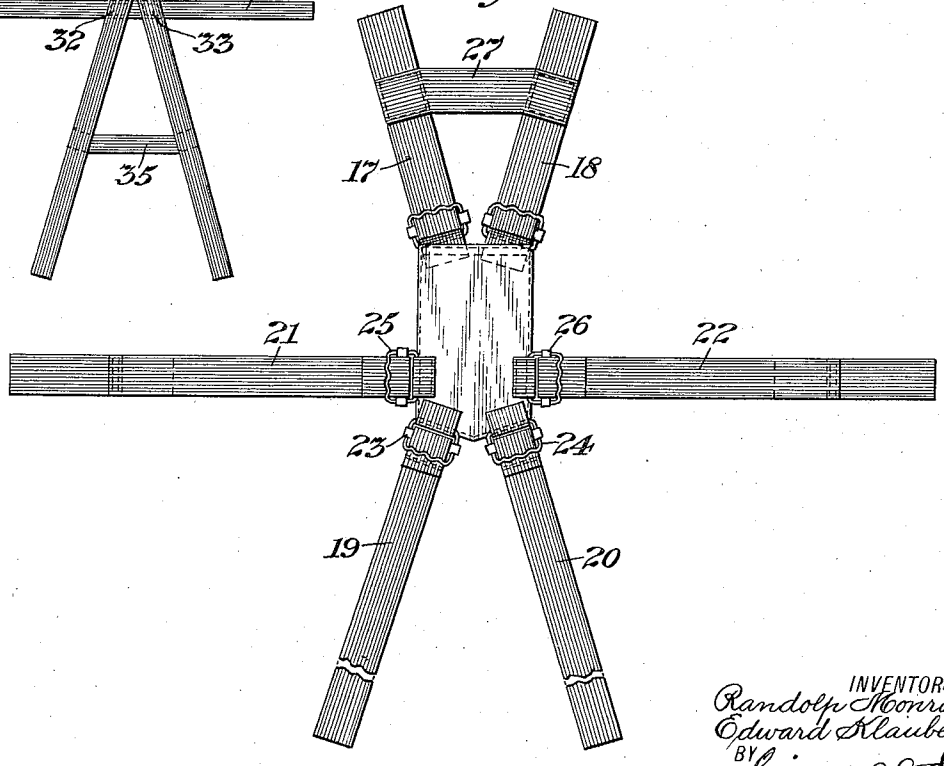

INVENTORS

Randolph Monro and

Edward Klauber

BY

THEIR ATTORNEYS

UNITED STATES PATENT OFFICE.

RANDOLPH MONRO AND EDWARD KLAUBER, OF NEW YORK, N. Y., ASSIGNORS TO WALDEMAR KOPS, OF NEW YORK, N. Y.

GAS-MASK.

1,395,761. Specification of Letters Patent. Patented Nov. 1, 1921.

Application filed April 30, 1919. Serial No. 293,872.

To all whom it may concern:

Be it known that we, RANDOLPH MONRO and EDWARD KLAUBER, both citizens of the United States, and residents of the borough of Manhattan, city, county, and State of New York, have invented an Improvement in Gas-Masks, of which the following is a specification.

This invention relates to gas masks, and more particularly to the harness structure employed therewith to properly maintain the mask in position on the head of the user. In the early development of gas masks, the harness employed to maintain the mask in place comprised a V-shaped member of resilient tape used at the top, and an inverted V-shaped member of resilient tape used at the bottom, the same being connected by an intermediate piece of straight resilient tape. This was found unsatisfactory because of the fact that it failed to maintain the mask in position, and also in many cases to make the joint between the edges of the mask and the face of the user gas-tight. In an effort to make the mask gas-tight, additional resilient tapes were employed extending transversely or sideways from the intermediate member previously employed to connect the V-shaped members, and this addition improved the tightness of the joint but did not prevent the mask from slipping down over the face of the wearer. Consequently in addition to the transverse tapes, a tape was added to extend across the upper or V-shaped member, transforming the same from a V-shape to an inverted A. In this form of mask, however, the tapes were also crossed centrally at the back so that the entire pressure employed in maintaining the mask in position by the harness, was centered at the back of the head of the wearer. In order to overcome these objections and disadvantageous features, we devised the harness comprising our present invention. This preferably comprises a pad member adapted when in place to lie at the central portion of the back of the head of the wearer of the mask, an upper tape member which is an inverted A-shape in form and extends from the top of the pad to the top of the mask, an inverted V-shaped tape connection extending from the lower end of the pad to the lower front portions of the mask, and side connections extending from the sides of the pad member to the central portions at the edges of the body of the mask. It will be understood, however, that the pad member may be formed in some instances to effect the same purpose and without causing too great a thickness at the back of the head of the wearer by making the inverted A tape members used at the top continuations of the inverted V-shaped members at the bottom and securing these parts together where they cross each other, while the side or transverse members are connected to the inverted V-shaped members below the place at which the same are joined to form the inverted A-shaped members which comprise the top part of the harness. The gas mask harness made in accordance with our invention will be hereinafter more particularly described in conjunction with the accompanying drawings, in which:

Figure 1 is an elevation of one form of our improved gas mask harness.

Fig. 2 is a similar view showing the harness before it is attached to the body of the mask.

Fig. 3 is a plan of the top member of the pad.

Fig. 4 is a similar view of the bottom member of the pad, and

Fig. 5, is a diagrammatic plan illustrating another form of the invention.

Referring to the drawing, it will be seen that in carrying out our invention, we prefer to employ a pad member adapted, when the mask is in place, to lie against the central back portion of the head of the wearer. This pad preferably comprises a top member 10 of any suitable fabric, and the bottom member 11 as shown in Fig. 4, may also be made of any suitable fabric. The bottom member as illustrated in this figure, also includes tabs or side projections 12, 13, 14 and 15 as illustrated. These parts of the pad are secured to one another by suitable lines of stitching indicated at 16 in Fig. 1 so that the top member becomes the outer member and the bottom member 11 becomess the inner member.

We also employ a pair of top tapes indicated at 17 and 18. The corresponding ends of these tapes or straps are suitably connected to the upper end of the pad and as will be understood these tapes 17 and 18 may be made of any suitable elastic fabric or other similar material. To the opposite or lower end of the pad, and to the tabs 13 and 14, we attach a pair of tapes 19 and 20. These tapes at their opposite ends are con-

nected to the lower front portions of the body of the mask. We also employ side or transverse tapes 21 and 22 which at corresponding ends are connected to the pad at the tabs 12 and 15 respectively. The opposite ends of the tapes 21 and 22 are connected to the side central portions of the body of the mask in any suitable manner. Associated with the bottom tapes 19 and 20, there are buckles 23 and 24, and similarly associated with the side or transverse tapes 21 and 22 there are buckles 25 and 26. As will be understood these buckles are suitably associated with the tapes with which they are connected so as to draw the same up in order to apply the desired tension to the mask to secure the same in place.

Also associated with the top tapes 17 and 18, we employ a cross tape 27. This extends between the tapes 17 and 18 an appreciable distance beyond the upper end of the pad and is employed to prevent the harness from slipping and permitting the mask to slide downward on the face of the wearer when in use. It will therefore be understood that the top straps are disposed in the form of an inverted A, while the bottom straps are disposed in the form of an inverted V. This is clearly illustrated in Fig. 2 of the drawing.

By reference to Fig. 5, it will be seen that in some instances, we may dispense with the use of the pad member hereinbefore described. In such a structure, the tapes indicated at 28 and 29 are used, the tape 28 being the equivalent of tapes 17 and 20, if a continuation of one another, and the tape 29 being the equivalent of tapes 18 and 19 if considered as a continuation of one another. In this structure, the tapes 28 and 29 are crossed and secured to one another as indicated at 30, and a side or transverse tape 31 which is the equivalent of the tapes 21 and 22 if considered as continuations of one another, is connected to the tapes 28 and 29 below the point of connection 30 so that the thickness of the harness at the back will not be such as to create an undue pressure on that portion of the head with which it contacts. In this form of the invention, we also employ a cross strap 34 extending between and connected to the upper ends of the tapes 28 and 29 which serves the same purposes as the cross tape 27 in the preferred form of the invention. It will therefore be apparent that in this structure, the top tapes also form or are disposed in the form of an inverted letter A while the bottom or lower tapes form or dispose in the form of an inverted letter V.

By further reference to Fig. 5, it will be seen in some instances that we may employ a cross strap 35 extending between and connected to the tapes 28 and 29 below the point at which these tapes cross each other and are secured to one another. This tape 35 as will be understood is employed to maintain the proper relative positions between the lower portions of the tapes 28 and 29 and converts these lower ends of the tapes from an inverted V to the form of a letter A. Also as indicated in Fig. 1, although it is not necessary in all instances, we may employ buckles 36 and 37 secured at the upper end of the pad member and adjustably associated with the top tapes 17 and 18, it being understood that these buckles as well as the other buckles hereinbefore described are associated with the respective tapes or straps for the purpose of making the same adjustable to the desired tension to properly secure the mask in position. We wish also to call attention to the fact that the tapes comprising the harness as constructed in accordance with our invention, are so associated with one another and the hood of the mask to entirely clear and thus not interfere with the ears of the wearer of the mask.

We claim as our invention:

1. In a gas mask and in combination with the hood thereof, a harness comprising a pad adapted to lie on the upper back portion of the head of the wearer, a set of straps diverging upwardly from the top of the pad and adapted to be connected to the upper front portions of the hood, and a set of straps diverging downwardly from the lower end of the pad and adapted to be connected to the lower side portions of the hood.

2. In a gas mask and in combination with the hood thereof, a harness comprising a pad adapted to lie on the upper back portion of the head of the wearer, a set of straps diverging upwardly from the top of the pad and adapted to be connected to the upper front portions of the hood, a set of straps diverging downwardly from the lower end of the pad and adapted to be connected to the lower side portions of the hood, and a set of straps extending from the sides of the said pad around the head of the wearer and connected to the side edges of the hood.

3. In a gas mask and in combination with the hood thereof, a harness comprising a pad adapted to lie on the upper back portion of the head of the wearer, a set of straps diverging upwardly from the top of the pad and adapted to be connected to the upper front portions of the hood, a set of straps diverging downwardly from the lower end of the pad and adapted to be connected to the lower side portions of the hood, and a transverse strap connecting the said upwardly diverging straps at an appreciable distance from their attachment to the said pad.

Signed by us this 7th day of April, 1919.

RANDOLPH MONRO.
EDWARD KLAUBER.