March 29, 1960 L. E. SENTZ ET AL 2,930,275

METHOD OF SEALING SPIRALLY WOUND DYNAMITE CONTAINERS

Filed Nov. 15, 1955

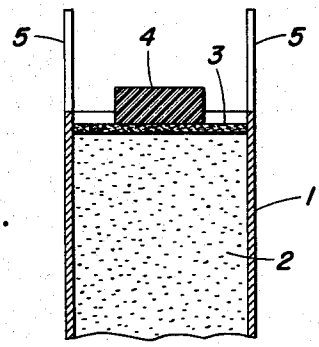

Fig. 1.

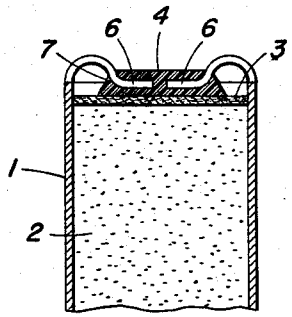

Fig. 2.

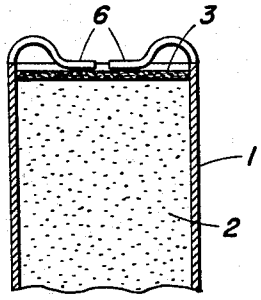

Fig. 3.
PRIOR ART

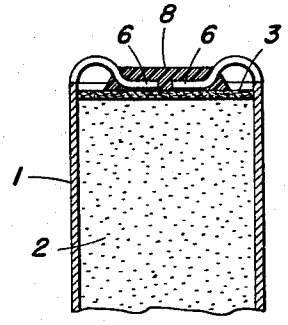

Fig. 4.
PRIOR ART

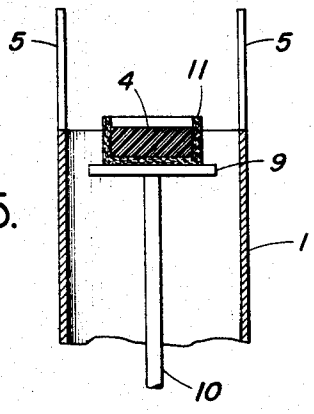

Fig. 5.

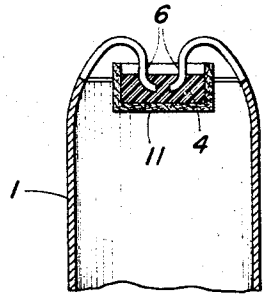

Fig. 6.

INVENTORS
Lemuel E. Sentz
John J. Brosky

BY
Harry E. Westlake Jr

AGENT

United States Patent Office 2,930,275 Patented Mar. 29, 1960

2,930,275

METHOD OF SEALING SPIRALLY WOUND DYNAMITE CONTAINERS

Lemuel E. Sentz and John J. Brosky, New Castle, Pa., assignors to American Cyanamid Company, New York, N.Y., a corporation of Maine

Application November 15, 1955, Serial No. 546,944

4 Claims. (Cl. 86—1)

This invention relates to a method of sealing the ends of containers for explosives and, more specifically, it relates to a method of sealing the ends of rigid tubular crimpable containers for explosives.

In the past, it has been customary to seal dynamite containers by pouring hot molten wax onto the crimped end. The dynamite container, after being packed with dynamite, was fitted with a small paper board disk to cover the dynamite and to support the seal, and the open end was then crimped over the disk. The end was then sealed by pouring hot molten wax into the end followed by spraying the whole stick with hot wax in order to make sure of a seal. This procedure has several disadvantages. First, there was the obvious danger of using hot materials around an explosive with the resultant possibility of unexpected detonations. In addition to this danger, the seal thus produced was not necessarily well bonded because, since the end was crimped first, the wax poured in the end lay almost entirely outside the crimping. Leakages and even a breaking off of the seal were possible.

We have found that if a small amount of wax is placed in the tube with the supporting disk or cup, the action of crimping the end by machine under pressure will cause cold flow in the wax and result in a seal in which the wax is strongly bonded to both sides of the crimped end and is molded into all the flutes of the crimping, with a major amount of the wax on the interior of the crimping.

It is an advantage of our invention that the wax is distributed on the interior of the crimping, since there it is protected against accidental dislodgement and more effectively seals the end. It is a further advantage of our invention that the wax is also to some extent distributed on the outside of the crimping and therefore, in effect, the crimping is sealed in wax.

It is a further advantage of our invention that by its use, one whole step in the manufacture of dynamite sticks is eliminated without eliminating its function. The prior art method of sealing the end required a step of crimping followed by a step of pouring the molten wax into the crimped ends. In our invention the wax is placed into the open end at the same time as the support, usually a small disk. The crimping machine is now operated normally and the result is a dynamite stick more effectively sealed than those of the prior art without having to go through the separate step of pouring molten wax into the crimped end. Our invention has thus permitted the achievement more effectively in one step what the prior processes did in two steps.

It is a still further advantage of our invention that the danger of handling explosives in the presence of hot wax is obviated. With our invention the detonation danger is greatly reduced since no hot materials need be used near the explosive charge.

Our invention can be further illustrated with reference to the drawings.

Figure 1 illustrates a dynamite stick ready to be crimped by the process of our invention.

Figure 2 represents the dynamite stick sealed by the process of our invention.

Figure 3 represents a dynamite stick which has been crimped but not yet sealed by the process of the prior art.

Figure 4 represents a dynamite stick sealed by the process of the prior art.

Figure 5 represents an empty cartridge unsealed at either end, in which a paper cup containing a block of wax has been inserted on a removable plunger, in position for one end to be crimped into a taper.

Figure 6 represents the tapered end of the same cartridge as Figure 5 after completion of the operation.

Figure 1 the dynamite stick **1** has been charged with the explosive **2**. The small paper disk **3** has been placed on top of the explosive and a small disk of wax **4** has been placed on top of the disk. The open ends of the walls of the dynamite stick **5** are still untouched. The stick is now ready for the crimping machine.

In Figure 2 the stick from Figure 1 has been crimped in the normal crimping machine. The wax **4** now forms a solid seal into which the crimp ends **6** are embedded. Most of the wax is distributed **7** under the crimp ends **6** or is holding the flutes of the crimping together.

In Figure 3 a dynamite stick is being closed and sealed by the method of the prior art. The explosive **2** has been charged to the stick. The disk **3** has been put into place and the stick has been run through the crimping machine. The crimped ends **6** are now sitting on top of the disk **3** but no effective seal against moisture is as yet obtained.

In Figure 4 the dynamite stick has been sealed by pouring molten wax **8** onto the fluted crimped ends. The wax is a seal on the outside of the flutes. Very little seeps beneath the flutes to form a solid bed for the crimp and very little seeps in the various flutes of the crimping. Such a seal is easily broken off and slight passages down the flutings are very often possible. Through such slight passages moisture can seep to destroy the effectiveness of the explosive charge thus degrading the purpose of the seal.

In Figures 5 and 6 there is illustrated a different use for our invention. Optionally the dynamite cartridge can be constructed with a tapered end before filling and sealing off the other end as illustrated in Figure 4. It has been found advantageous to use the cold flow wax principle in forming this tapered end, also. In Figure 5, a support **9**, on a long plunger **10** has been inserted through the tube. A small paper cup **11**, containing the block of wax is supported thereon, in place for the action of crimping machine. In Figure 6 the latter has crimped the end of the cartridge into a tapered nose with the crimped ends **6** embedded in the wax. The prior art method was to crimp the ends into the empty cup and pour molten wax into the crimped ends.

Even though the cartridge is as yet unfilled and there is no danger in the use of hot wax, there are distinct advantages in the use of a cold flow seal for the closing of one end before filling, either with a square seal such as is used on the filled cartridge or with a tapered seal as just illustrated. These advantages include all those others mentioned previously, the better seal, protected against breakage and dislodgement, and the elimination of one whole step in the formation of the seal.

The waxes which may be used in the process of our invention must be capable of cold flow under pressure of the crimping machine to form a cohesive mass but to retain its new shape when the pressure is released. Furthermore, it must be amorphous or microcrystalline since a crystalline material will tend to break up under the pressure or on impact. This property can be defined as cold flow with no loss of cohesion. The wax seal

must meet the specifications of the Interstate Commerce Commission that there be no cracking above 0° F. and no loss of shape below 130° F. and this requirement is the basic definition of the needed physical attributes. The chemical structure of the wax used is of no importance, provided it is inert to the container, its contents, and the atmosphere. Waxes and greases formed from paraffins and other hydrocarbons, chlorinated diphenyls or naphthalenes, polyethylene oxides and the like can equally well be used, provided they meet the physical properties needed.

The amount of wax used will vary with the size of the dynamite stick. We have found that an 18 g. cube of microcrystalline wax gives an adequate seal for a container 4½ to 5 inches in diameter. With different sized containers different quantities are needed. The essential thing is that there be sufficient to leave a continuous film of wax between the crimped ends and the support underneath the wax (the disk 3 or the cup 9 in the figures).

The process of our invention is usuable for any explosive package which is usually end-sealed by crimping of the open ends. It is not limited to any particular size of explosive stick but is equally usable on any as long as the end can be sealed by crimping. The containers usually used are convolutely wound paper tubing (most often a spirally wound tubing) but other constructions are usable.

The word paper is used broadly to cover light cardboards as well as paper, since these can be viewed as a thick sheet of paper. Other materials can also be used in constructing the containers and the supporting means so long as the wax possesses adhesion thereto and the container material is crimpable.

The means for supporting the seal has been shown in the figures as either a disk or a cup on which the wax is placed. These are the usual shapes but variation will be apparent to those skilled in the art. The supporting means may be any shape large enough to underlie completely the crimped end. It may be made of any material with which wax will form a tight bond.

While our invention relates primary to a process of sealing the ends of an explosive stick it also includes the sticks so sealed. As has been shown above, the characterizing features of the sticks sealed by our process is that the major portion of the wax is below the ends of the crimpings and the fact that the said ends are embedded in the wax.

What is claimed is:

1. A method of sealing an end of a rigid tubular crimpable container for explosives which comprises positioning a supporting means above an explosive charge in the open end of said tubular container; positioning on said supporting means, a piece of solid wax, said wax being characterized by deformation under stress at room temperature, by retaining its shape below 130° F.; then crimping said open end of said tube under pressure without the application of heat and at temperatures at which the wax remains solid, and continuing said crimping under pressure to deform the wax under stress into the flutes of said crimping, whereby said crimped end is made to become embedded in said wax, there being a sufficient amount of said wax to leave a continuous film of wax between said supporting means and said crimped end of said tube, said wax being adhesive to said container ends and said supporting means.

2. The method of claim 1 in which a small paper cup is positioned in said open end of said tubular container to form said supporting means and in which the crimping under pressure of said tubular container forms a tapered end to the container.

3. A method of sealing an end of a rigid, tubular, crimpable container for explosives which comprises inserting from one end of said tubular container a removable support, said support extending approximately to the other open end of said container, positioning on said support a first supporting means, positioning on said first supporting means a first piece of solid wax, said wax being characterized by deformation under stress at room temperature by retaining its shape below 130° F.; then crimping said open end of said tube under pressure, without the application of heat and at temperatures at which the wax remains solid, and continuing said crimping under pressure to deform the wax under stress into the flutes of said crimping, whereby said crimped end is made to become embedded in said wax, there being a sufficient amount of said wax to leave a continuous film between said supporting means and said crimped end of said tube, said wax being adhesive to said container ends of said supporting means; removing said removable support; charging said tubular container with an explosive charge; positioning a second supporting means above the explosive charge in the remaining open end of said tubular container, positioning on said second supporting means a second piece of solid wax of the same characteristics as the said first piece of solid wax used; then crimping the said remaining open end of said tube under pressure without the application of heat and at temperatures at which the wax remains solid and continuing said crimping under pressure to deform the wax under stress into the flutes of said crimping, whereby said crimped end is made to become embedded in said wax, there being a sufficient amount of said wax to leave a continuous film between said second supporting means and said second crimped end of said tube.

4. The method of claim 3 in which the first crimping operation forms a tapered point, the said first supporting means being a small paper cup.

References Cited in the file of this patent

UNITED STATES PATENTS

Re. 23,102	Baker (Orig. 2,408,189)	Apr. 26, 1949
503,777	Sutton	Aug. 22, 1893
1,913,259	Bashford	June 6, 1933
2,091,291	Ringler	Aug. 31, 1937
2,232,634	Roberts et al.	Feb. 18, 1941
2,340,836	Milmoe	Feb. 1, 1944
2,591,286	Paulve	Apr. 1, 1952